REG	STATE	PROJECT	SHEET NO.	TOTAL SHEETS
3	D.C.	FAP No. STP-8888(480)	1	173

DISTRICT OF COLUMBIA
DEPARTMENT OF TRANSPORTATION

PLANS OF PROPOSED

REVITALIZATION OF KENNEDY STREET, N.W.

FROM GEORGIA AVENUE TO NORTH CAPITOL STREET

FAP No. STP-8888(480)

LENGTH OF PROJECT :

KENNEDY STREET, N.W.: 1.02 MILES
MISSOURI AVENUE, N.W.: 0.15 MILE
KANSAS AVENUE, N.W.: 0.17 MILES

INDEX OF DRAWINGS

1	TITLE SHEET
2	GENERAL NOTES
3-4	STANDARD SYMBOLS & ABBREVIATIONS
5	SUMMARY OF QUANTITIES
6	SURVEY LINE AND BASELINE TIE
7-18	EXISTING CONDITIONS
19-23	TYPICAL SECTIONS
24-35	PAVEMENT PLANS
36-39	HIGHWAY DETAILS
40-51	LANDSCAPE PLANS
52-53	LANDSCAPE ALIGNMENT AND LAYOUT PLANS
54-57	LANDSCAPE DETAILS
58-69	PLANTING PLANS
70	PLANTING DETAILS
71-82	DRAINAGE PLANS
83-91	DRAINAGE PROFILES
92-93	DRAINAGE DETAILS
94	FIRE HYDRANT RELOCATION PLAN
95	BIORETENTION POND DETAILS
96-107	GRADING, EROSION & SEDIMENT CONTROL PLANS
108-109	EROSION & SEDIMENT CONTROL DETAILS
110-111	BORING LOGS
112-123	EXISTING SIGNING AND MARKING PLANS
124-135	PROPOSED SIGNING AND MARKING PLANS
136-137	SIGN SCHEDULE
138-160	STREET LIGHTING PLANS
161-173	TRAFFIC SIGNAL PLANS
1-84	DC WATER GREEN INFRASTRUCTURE STREETSCAPE

KEY MAP

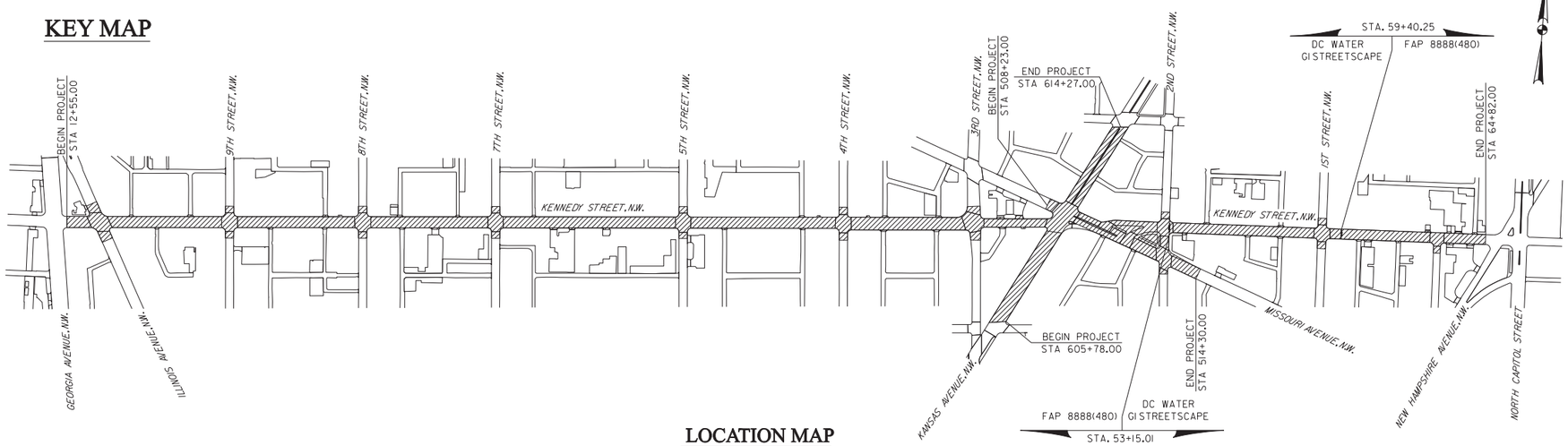

LOCATION MAP
N.T.S.

KENNEDY STREET, N.W.	
CONTROL OF ACCESS	NONE
ADT (2014)	6,600
ADT (2034)	7,300
DHV (2034)	730
DISTRIBUTION	55/45
TRUCKS	1%
POSTED V	25 MPH
DESIGN V	30 MPH
FUNCTIONAL CLASSIFICATION - COLLECTOR	

Precision Systems, Inc.
Engineers, Planners and Architects
WASHINGTON, D.C.

DISTRICT OF COLUMBIA
YONGLIANG YANG
No. PE901731
03/28/16
LICENSED (CIVIL)
PROFESSIONAL ENGINEER

DISTRICT OF COLUMBIA
DEPARTMENT OF TRANSPORTATION

RECOMMENDED FOR APPROVAL:
Paul W. Hoffman, April 20, 2016
PROGRAM MANAGER, TEAM 2, WARDS 3 & 4

APPROVED: 4/21/16
INTERIM CHIEF TRANSPORTATION ENGINEER

POLICY, PLANNING, AND SUSTAINABILITY ADMINISTRATION

DATE:

DEPT. OF TRANSPORTATION
FEDERAL HIGHWAY ADMINISTRATION

APPROVED:

DIVISION ADMINISTRATOR

DATE:

P:\60570\for printing\civil\p0N_T000_60570.dgn
Friday, April 22, 2016 AT 09:07 AM

REG	STATE	PROJECT	SHEET NO.	TOTAL SHEETS
3	D.C.	FAP No. STP-8888(480)	2	173

GOVERNING SPECIFICATIONS

THE DISTRICT OF COLUMBIA DEPARTMENT OF TRANSPORTATION STANDARD SPECIFICATIONS FOR HIGHWAYS AND STRUCTURES (2013), THE CONTRACT DOCUMENTS INCLUDING CONTRACT PLANS, SPECIAL CONDITIONS AND TABULATIONS ARE THE GOVERNING PROVISIONS APPLICABLE TO THIS PROJECT.

SCOPE OF WORK

CONTRACT INCLUDES ROADWAY RESURFACING /RECONSTRUCTION, SIDEWALK AND LANDSCAPE IMPROVEMENTS, DRAINAGE, PAVING, SIGNING, PAVEMENT MARKING, STREET LIGHTING, AND TRAFFIC SIGNAL UPGRADE OF KENNEDY STREET, N.W. FROM GEORGIA AVENUE TO NORTH CAPITOL STREET.

THE CONTRACTOR SHALL COORDINATE HIS/HER WORK WITH THE ENGINEER AT ALL TIMES. NO COMPENSATION WILL BE MADE TO THE CONTRACTOR BY THE DEPARTMENT FOR WORK PERFORMED WITHOUT AUTHORIZATION FROM THE ENGINEER.

TOPOGRAPHIC MAPPING

THE PLANIMETRIC INFORMATION SHOWN IS BASED ON GROUND SURVEY.

PROPERTY LINES AND RIGHT OF WAY LINES SHOWN ARE BASED ON RECORD DRAWINGS AND DO NOT REPRESENT A BOUNDARY SURVEY.

HORIZONTAL AND VERTICAL CONTROL

ALL ELEVATIONS REFER TO THE D.C. ENGINEER 5/32 S DATUM.
ALL COORDINATES REFER TO THE MARYLAND STATE PLAN COORDINATES SYSTEM.

CONTRACTOR COORDINATION

THE CONTRACTOR IS HEARBY INFORMED THAT OTHER CONTRACTORS MAY BE WORKING IN THE AREA. THE CONTRACTOR SHALL COORDINATE HIS/HER MAINTENANCE OF TRAFFIC AND SIGNING AND OTHER ACTIVITIES WITH OTHER CONTRACTORS TO AVOID ANY CONFLICT.

SITE GRADING

ALL DISTURBED AREAS SHALL BE SITE GRADED TO ACHIEVE POSITIVE DRAINAGE USING BACKFILL MATERIAL AS REQUIRED IN THE SPECIFICATIONS AND SEEDED/SODDED ACCORDING TO THE SEED/SOD REQUIREMENTS SET FORTH IN THE SPECIFICATIONS.

EXISTING TREES

THERE ARE EXISTING MATURE TREES ALONG THIS ROADWAY. UNLESS OTHERWISE NOTED, ALL EXISTING TREES SHALL BE PRESERVED. THE CONTRACTOR SHALL BE EXTREMELY CAREFUL WHILE WORKING AROUND THESE MATURE TREES. THE CONTRACTOR SHALL CONTACT THE DISTRICT DEPARTMENT OF TRANSPORTATION URBAN FORESTRY ADMINISTRATION AT (202) 671-5133 FOR ALL ISSUES CONCERNING TREES.

MAINTENANCE OF TRAFFIC

DURING ALL PHASES OF PROJECT OPERATIONS AND FOR THE DURATION OF THE CONTRACT, VEHICULAR AND PEDESTRIAN TRAFFIC SHALL BE MAINTAINED IN ACCORDANCE WITH THE CONTRACT DRAWINGS AND SPECIFICATIONS.

UTILITIES

THE FOLLOWING UTILITIES HAVE FACULTIES IN THE CONTRACT AREA.

1. DISTRICT OF COLUMBIA WATER AND SEWER AUTHORITY (DC WATER)
   OFFICE OF ENGINEERING AND TECHNICAL SERVICES
   5000 OVERLOOK AVENUE, S.W.
   (202) 787-4024

2. WASHINGTON GAS
   DISTRIBUTION DEPARTMENT
   8801 INDUSTRIAL ROAD
   SPRINGFIELD, VIRGINIA 22151
   (703) 750-4256

3. POTOMAC ELECTRIC AND POWER COMPANY (PEPCO)
   3400 BENNING ROAD, N.E.
   WASHINGTON D.C 20019
   (202) 388-2602

4. VERIZON COMMUNICATIONS
   13101 COLUMBIA PIKE, BUILDING FDC-1
   SILVER SPRING, MD20904
   (301) 282-7043

THE EXISTENCE OF OTHER UTILITIES IS UNKNOWN. THE CONTRACTOR SHALL BE RESPONSIBLE FOR MAINTENANCE OF ALL EXISTING UTILITIES AND PROVIDE TEMPORARY SUPPORT AS REQUIRED DURING CONSTRUCTION.
FOR FULL INFORMATION REGARDING UTILITIES PROTECTION, SEE THE SPECIAL PROVISION UTILITIES PROTECTIVE ALERT.

NOTIFY MISS UTILITY @ 1-800-257-7777 FORTY EIGHT HOURS PRIOR TO CONSTRUCTION.

THE LOCATION OF THE UTILITIES SHOWN ON PLANS ARE BASED ON FIELD SURVEY DATA AND/OR RECORD DRAWINGS OF THE ORIGINAL LOCATIONS. THE INFORMATION SHOWN IS NOT NECESSARILY COMPLETE AND THE LOCATION OF THE UTILITIES SHOWN ARE APPROXIMATE. IT SHALL BE THE RESPONSIBILITY OF THE CONTRACTOR TO VERIFY THE EXISTENCE OF ALL THE UTILITIES WELL IN ADVANCE OF CONDUCTING CONSTRUCTION OPERATIONS, WHICH COULD DAMAGE THESE FACILITIES IN AREAS WHERE PROPOSED CONSTRUCTION MAY CONFLICT WITH EXISTING UTILITIES. THE CONTRACTOR SHALL TAKE ALL NECESSARY PRECAUTIONS TO AVOID DAMAGE TO EXISTING UTILITIES. IF AN UNDERGROUND UTILITY IS DAMAGED, THE CONTRACTOR SHALL IMMEDIATELY NOTIFY THE ENGINEER AND THE OWNER OF SAID UTILITY. ANY DAMAGE SUSTAINED TO THE UTILITIES ABOVE OR BELOW GROUND SHALL BE REPAIRED BY OR UNDER THE DIRECTION OF THE UTILITY OWNER AT THE CONTRACTOR'S EXPENSE. UNDER NO CIRCUMSTANCE SHALL THE CONTRACTOR BACK FILL AN EXCAVATION AFFECTING SAID UTILITY WITHOUT FIRST RECEIVING PERMISSION FROM THE UTILITY OWNER.

ALL EXISTING DC WATER ITEMS SUCH AS CATCH BASIN TOPS, MANHOLE FRAMES & COVERS AND WATER LINE RELATED ASSEMBLIES THAT ARE NOT REUSED SHALL BE SALVAGED AND RETURNED TO DC WATER.

REMOVE FRAME AND COVER OF SEWER STRUCTURES AND WATER MAIN VALVE CASINGS TO BE ABANDONED AND FILL TO GRADE.

THE CONTRACTOR SHALL EXCAVATE AND LOCATE, VERTICALLY AND HORIZONTALLY, ALL EXISTING UTILITIES IN CLOSE PROXIMITY TO THE PROPOSED WATER AND SEWER FACILITIES.

THE CONTRACTOR SHALL FIELD VERIFY EXISTING CONDITIONS AT ALL LOCATIONS WHERE EXISTING WATER MAINS ARE TO BE ALTERED. THE CONTRACTOR SHALL PROVIDE ADDITIONAL FITTINGS AND ADAPTORS NOT SHOWN ON DRAWINGS AS REQUIRED FOR A COMPLETE INSTALLATION.

THE CONTRACTOR IS RESPONSIBLE FOR ADJUSTING ALL UTILITY COVER ELEVATION REQUIRED TO MEET NEW ROADWAY GRADE.

THE HORIZONTAL STATION AND OFFSET FOR CATCH BASINS ARE TO THE CURB LINE ELEVATION.

HORIZONTAL STATIONS AND OFFSETS FOR MANHOLES ARE TO THE CENTERLINE OF STRUCTURE AND ELEVATION PROVIDED IS THE TOP OF COVER ELEVATION.

ALL ELECTRICAL WORK SHALL BE IN ACCORDANCE WITH THE LATEST NATIONAL ELECTRIC CODE AND THE DISTRICT OF COLUMBIA MUNICIPAL REGULATION CONSTRUCTION CODES (DCMR). SPECIAL PRECAUTIONS SHALL BE EXERCISED WHEN WORKING CLOSE TO HIGH-VOLTAGE OVERHEAD UTILITY LINE FOR WORKERS/PUBLIC SAFETY.

PEPCO UTILITY POLE REGULATION

SOME OF THE EXISTING UTILITY POLES MIGHT NEED TO BE REGULATED BY PEPCO.

THE CONTRACTOR SHALL BE RESPONSIBLE TO NOTIFY PEPCO IN WRITING AT LEAST THREE WEEKS PRIOR TO CONSTRUCTION AND TO IDENTIFY AND STAKE OUT FINAL POLE LOCATION (OFFSET OF 3' FROM THE FACE OF PROPOSED CURB TO CENTER LINE OF PROPOSED POLE LOCATION) FOR PEPCO TO RELOCATE ITS POLES, IF NECESSARY.

THE CONTRACTOR SHALL BE RESPONSIBLE TO NOTIFY ALL OTHER UTILITIES THAT ARE CONNECTED TO EACH POLE THEIR RESPECTIVE UTILITY TO THE NEW POLE LOCATION. AND INFORM THEM THAT THEY ARE CONNECTED, IF NECESSARY.

NO ADDITIONAL TIME WILL BE GRANTED FOR THIS WORK, UNLESS OTHERWISE APPROVED BY THE ENGINEER.

AMERICANS WITH DISABILITIES ACT (ADA) NOTES

1. ALL RAMPS, SIDEWALKS, DRIVEWAYS AND CONSTRUCTION WORK SHALL COMPLY WITH THE MOST CURRENT ADA STANDARDS AND GUIDELINES.

2. CONTRACTOR SHALL BE RESPONSIBLE TO VERIFY THAT THE PROPOSED WORK WILL COMPLY WITH THE MOST CURRENT ADA STANDARDS PRIOR TO CONSTRUCTION.

3. CONTRACTOR'S PROJECT MANAGER WILL CONTACT THE ADA COORDINATOR IN THE EVENT THAT FIELD MODIFICATIONS ARE NEEDED TO THE PROPOSED WORK FOR ADA COMPLIANCE.

4. CONTRACTOR IS RESPONSIBLE FOR THE ACCURACY OF ALIGNMENT, GRADES AND FORMING STANDARDS, THAT MEETS THE MOST CURRENT ADA STANDARDS, PRIOR TO PLACING CONCRETE.

SEDIMENT AND EROSION CONTROL

ALL SEDIMENT AND EROSION CONTROL METHODS SHALL BE INSTALLED BEFORE THE START OF ANY EXCAVATION AND/OR CONSTRUCTION FOR SOIL EROSION AND SEDIMENT CONTROL FOR THE DISTRICT OF COLUMBIA. IF AN ON SITE INSPECTION REVEALS FURTHER EROSION CONTROL MEASURES ARE NECESSARY, THE SAME SHALL BE PROVIDED.

ALL DEBRIS IS TO BE REMOVED FROM THE SITE.

ALLEY AND/OR STREETS/SIDEWALKS SHALL BE SWEPT CLEAN AT ALL TIMES DURING EXCAVATION AND CONSTRUCTION.

ALL CATCH BASINS OR DRAIN AREAS SHALL BE PROTECTED DURING EXCAVATION AND CONSTRUCTION.

IF ANY CATCH BASIN OR DRAIN AREA BECOMES CLOGGED AS A RESULT OF EXCAVATION OR CONSTRUCTION, THE CONTRACTOR SHALL BE RESPONSIBLE FOR ITS CLEANING.

TREES TO BE PROTECTED SHALL BE FENCED AROUND THE TREE BOX. SNOW FENCING OR EQUAL SHALL BE USED WITH A MINIMUM HEIGHT OF 4.0 FEET ABOVE EXISTING GRADE.

ALL STABILIZATION/SEEDING SHALL BE ACCOMPLISHED IN ACCORDANCE WITH THE LATEST VERSION OF D.C STANDARD SPECIFICATIONS FOR SOIL EROSION AND SEDIMENT CONTROL, ARTICLE NO. 618.

WINTERIZATION - ANY DISTURBED AREA NOT PAVED, SODDED, OR BUILT UPON BY OCTOBER 15 IS TO BE SEEDED AND MULCHED ON THAT DATE UNLESS WAIVED BY THE ENGINEER.

THE CONTRACTOR SHALL INSPECT ALL EROSION AND SEDIMENT CONTROL MEASURES PERIODICALLY AND AFTER EACH RAINFALL EVENT. ANY REPAIR OR CLEAN UP NECESSARY TO MAINTAIN THE EFFECTIVENESS OF THE SEDIMENT AND EROSION CONTROL MEASURES SHALL BE DONE IMMEDIATELY.

PRIOR TO REMOVING ANY SEDIMENT AND EROSION CONTROL MEASURES, APPROVAL MUST BE GIVEN FROM DDOE.

ELECTRICAL SAFETY

PRIOR TO THE START OF WORK WHERE WORK MAY OCCUR WITHIN 10 FEET OF AN OVERHEAD LINE CARRYING 600 VOLTS OR MORE, THE CONTRACTOR SHALL NOTIFY THE UTILITY AT LEAST 5 WORKING DAYS BEFORE ANY WORK BEGINS IN ORDER TO IDENTIFY ENERGIZED LINES OR EQUIPMENT. THE CONTRACTOR SHALL ALLOW THE PROPER SAFETY ARRANGEMENTS TO BE PUT IN PLACE BY THE UTILITY BEFORE COMMENCING THEIR WORK. COMPLIANCE WITH THE MUTUALLY ACCEPTABLE SAFETY ARRANGEMENTS SHALL BE THE RESPONSIBILITY OF THE CONTRACTOR.

THE CONTRACTOR SHALL INFORM EMPLOYEES OF THE HAZARDS AND CORRESPONDING PRECAUTIONS WHEN WORKING NEAR HIGH VOLTAGE. WHERE THERE IS POTENTIAL FOR PROXIMITY OR CONTACT WITH ENERGIZED LINES OR EQUIPMENT, WORK SHALL NOT BEGIN UNTIL A SAFETY MEETING IS CONDUCTED AND APPROPRIATE STEPS ARE TAKEN TO IDENTIFY, MARK, AND WARM AGAINST ACCIDENTAL CONTACT. SUPERVISORS SHALL REVIEW OPERATIONS DAILY TO ENSURE COMPLIANCE. ENERGIZED ELECTRICAL LINES OR EQUIPMENT SHALL BE CONSPICUOUSLY MARKED AND WORKERS SHALL BE REMINDED OF THEIR LOCATIONS. ALL EQUIPMENT USED IN THE VICINITY SHALL BE MARKED WITH WARNING DECALS REGARDING ELECTRICAL CONTACT. WHEN AN EQUIPMENT OPERATOR IS UNABLE TO ASSESS CLEARANCES, PROVIDE A "SPOTTER" TO OBSERVE FOR CLEARANCES AND DIRECT THE OPERATOR.

FAILURE TO COMPLY WITH THE OCCUPATIONAL SAFETY AND HEALTH ACT (OSHA) 1926.1408, THE MARYLAND HIGH VOLTAGE LINE ACT, OR VIRGINIA'S OVERHEAD HIGH VOLTAGE LINE SAFETY ACT IS A VIOLATION OF LAW. THE LAW APPLIES TO BOTH PROFESSIONAL AND NON-PROFESSIONAL WORKERS. NO ONE IS EXEMPT FROM COMPLIANCE.

ALL COSTS ASSOCIATED WITH PROTECTION OF WORK IN PROXIMITY TO HIGH VOLTAGE LINES SHALL BE REFLECTED IN THE UNIT PRICES FOR THE APPROPRIATE PAY ITEM.

$PENTBLS$
$PLTDRVS$
P:\60570\civil\plans\pGN_N001_60570.dgn
Thursday, April 14, 2016 AT 02:10 PM

GN-01

D.C. DEPARTMENT OF TRANSPORTATION
INFRASTRUCTURE PROJECT MANAGEMENT ADMINISTRATION
PROJECT MANAGEMENT DIVISION

KENNEDY STEET, N.W. IMPROVEMENT
FROM GEORGIA AVENUE TO NORTH CAPITOL STREET

PROJECT ENG. WZ
DESIGNED BY AYY
CHECKED BY MYH
DRAWN BY WZ/YZ
PROJECT MGR. AYY

GENERAL NOTES

DIVISION CHIEF
DATE
FILE
SHEET 2 OF 173

Precision Systems, Inc.
Engineers, Planners and Architects
WASHINGTON, D.C.

NO	DESCRIPTION	NAME	DATE

REVISIONS

REG	STATE	PROJECT	SHEET NO.	TOTAL SHEETS
3	D.C.	FAP No. STP-8888(480)	3	173

STANDARD SYMBOLS

- EXISTING TRAFFIC SIGNAL CONTROLLER
- EXISTING 28-FOOT PENDANT POST STREETLIGHT POLE WITH LUMINAIRE TO BE REMOVED
- EXISTING 28-FOOT PENDANT POST STREETLIGHT POLE WITH LUMINAIRE TO REMAIN
- EXISTING WOOD POLE
- EXISTING WOOD POLE AND/OR LUMINAIRE TO BE REMOVED
- EXISTING WOOD POLE WITH LUMINAIRE TO REMAIN
- EXISTING NO. 16 STREETLIGHT POLE TO REMAIN
- EXISTING HISTORIC STREETCAR CATENARY POLE
- PROPOSED 28-FOOT PENDANT POST STREETLIGHT POLE WITH FIXTURE
- PROPOSED LOCATION FOR PEPCO POWER CONNECTION
- EXISTING LUMINAIRE AND SUPPORT ARM INDICATING DIRECTION OF LIGHT TO BE REMOVED
- PROPOSED LUMINAIRE AND SUPPORT ARM INDICATING DIRECTION OF LIGHT
- PROPOSED WHEELCHAIR RAMP
- EXISTING WHEELCHAIR RAMP
- EXISTING DDOT MANHOLE (4'X4'X4')
- EXISTING SINGLE CATCH BASIN
- EXISTING DOUBLE CATCH BASIN
- EXISTING SINGLE CATCH BASIN WITH DOUBLE THROAT ELONGATION
- EXISTING SINGLE CATCH BASIN WITH TRIPLE THROAT ELONGATION
- PROPOSED SINGLE CATCH BASIN
- PROPOSED DOUBLE CATCH BASIN
- PROPOSED TRIPLE CATCH BASIN
- PROPOSED BASE LINE
- NORTH ARROW
- PROPOSED FIRE HYDRANT
- PROPOSED WATER VALVE
- EXISTING FIRE HYDRANT
- EXISTING MANHOLE (UNIDENTIFIED)
- EXISTING COMBINED SEWER MANHOLE
- EXISTING STORM DRAIN MANHOLE
- EXISTING SANITARY SEWER MANHOLE
- EXISTING SANITARY SEWER CLEANOUT
- EXISTING WATER MANHOLE
- EXISTING TELEPHONE MANHOLE
- EXISTING FIBER OPTIC MANHOLE
- EXISTING PEPCO ELECTRICAL MANHOLE
- EXISTING GAS MANHOLE
- EXISTING MONITORING WELL
- EXISTING GUY WORE
- EXISTING MAIL BOX
- EXISTING GAS METER
- EXISTING GAS VALVE OR CUT-OFF
- EXISTING GAS TEST STATION
- EXISTING WATER METER
- EXISTING WATER VALVE OR CUT-OFF
- PROPOSED WATER VALVE, GATE VALVE
- EXISTING ELECTRIC BOX
- EXISTING SIGN POST
- EXISTING LIGHTING POLE
- EXISTING UTILITY POLE
- EXISTING TRASH BARREL
- EXISTING CALL BOX
- PROPOSED SANITARY SEWER, STORM DRAIN, WATER MANHOLE
- EXISTING WALL OR COPING

- EXISTING PEPCO ELECTRICAL LINE (FROM RECORD)
- EXISTING PEPCO ELECTRICAL LINE TO BE REMOVED
- EXISITNG GAS LINE (FROM RECORD)
- EXISTING TELEPHONE LINE (FROM RECORD)
- EXISTING COMBINED SEWER LINE
- EXISTING CATCH BASIN CONNECTION
- EXISTING WATER LINE (FROM RECORD)
- EXISTING DDOT ELECTRICAL CONDUIT
- PROPOSED WATER MAIN LESS THAN 24"
- PROPOSED CATCH BASIN CONNECTION
- PROPOSED DDOT ELECTRICAL PVC CONDUIT
- DIRECTION OF TRAFFIC
- LIMIT OF RESURFACING
- HEDGE
- EXISTING EVERGREEN TREE
- EXISTING DECIDUOUS TREE
- PROPOSED TREE
- EXISTING TREE TO BE REMOVED
- EXISTING TREE WITH TREE PROTECTION
- EXISTING POLICE CALL BOX
- EXISTING STREETLIGHT POLE
- RIGHT OF WAY LINE
- BUILDING RESTRICTION LINE
- LOT LINE
- EXISTING FENCE (INDICATE TYPE)
- 45.67 (Slant Lettering) EXISTING ELEVATION AND/OR FEATURES
- 45.67 (Upper Cap.) PROPOSED ELEVATION AND/OR FEATURES
- BENCH MARK
- TRIANGULATION OR COORDINATION STATION
- LOCATION OF TEST BORINGS
- BREAK IN GRADE

GN-02

D.C. DEPARTMENT OF TRANSPORTATION
INFRASTRUCTURE PROJECT MANAGEMENT ADMINISTRATION
PROJECT MANAGEMENT DIVISION

KENNEDY STEET, N.W. IMPROVEMENT
FROM GEORGIA AVENUE TO NORTH CAPITOL STREET

STANDARD SYMBOLS

PROJECT ENG. WZ
DESIGNED BY AYY
CHECKED BY MYH
DRAWN BY WZ/YZ
PROJECT MGR. AYY

DIVISION CHIEF
DATE
FILE
SHEET 3 OF 173

Precision Systems, Inc.
Engineers, Planners and Architects
WASHINGTON, D.C.

NO	DESCRIPTION	NAME	DATE

REVISIONS

p:\60570\civil\plans\pGN_N002_60570.dgn
Tuesday, July 28, 2015 AT 03:24 PM
$PENTBLS$
$PLTDRVS$

REG	STATE	PROJECT	SHEET NO.	TOTAL SHEETS
3	D.C.	FAP No. STP-8888(480)	4	173

ABBREVIATIONS

AC	ASPHALT CONCRETE
ADD'L	ADDITIONAL
ACC.	ACCESS
ADT	AVERAGE DAILY TRAFFIC
APPROX.	APPROXIMATELY
AVE.	AVENUE
BRG.	BEARING
BRGS.	BEARINGS
℄	BASELINE
B&B	BALLED & BURLAPPED
BM	BENCH MARKS
°C	DEGREE CELSIUS
CAL.	CALIPER
CL.	CLASS
CLR.	CLEARANCE
C OF A	CONTROL OF ACCESS
CONC.	CONCRETE
CONST.	CONSTRUCTION
CONT.	CONTINUOUS
CRS	CONSTRUCTION ROAD STABILIZATION
C. TO C.	CENTER TO CENTER
Cu. yDS.	CUBIC YARDS
D.C.	DISTRICT OF COLUMBIA
D.I.P.	DUCTILE IRON PIPE
DCMR	DISTRICT OF COLUMBIA MUNICIPAL REGULATION CONSTRUCTION CODE
DDOT	DISTRICT OF COLUMBIA DEPARTMENT OF TRANSPORTATION
DHV	DESIGN HOURLY VOLUME
DIA.	DIAMETER
DWG./DWGS.	DRAWING/DRAWINGS
EA., EA	EACH
E.B.L.	EASTBOUND LANE
EL./ELEV.	ELEVATION
ELEC.	ELECTRICAL
ENG.	ENGINEER
ENT.	ENTRANCE
ESD	ELLIPTICAL STORM DRAIN
E.T.R.	EXISTING TO REMAIN
EX./EXIST.	EXISTING
EXP.	EXPANSION
E.W.	EACH WAY
ft^3	CUBIC FEET
ft^2	SQUARE FEET
GND	GROUND
H.B.	HORIZONTAL BEND
H.C.	HANDICAP
HEX.	HEXAGONAL
HORIZ.	HORIZONTAL
H.P.	HIGH POINT
HPS	HIGH PRESSURE SODIUM
HT.	HEIGHT
HYD.	HYDRANT
INV.	INVERT
JT.	JOINT
L	LITER, ANGLE
lbs	POUNDS
LED	LIGHT EMITTING DIODES
LLV	LONG LEG VERTICAL
LONGIT.	LONGITUDINAL
LT.	LEFT
LVC	LENGTH OF VERTICAL CURVE
Lxx-PP	INSTALL NEW PENDANT POST STREETLIGHT POLE AND LUMINAIRE
Lxx-PP/TS	INSTALL COMBINATION STREETLIGHT TRAFFIC SIGNAL PENDANT POLE WITH LUMINAIRE
Lxx-WP	INSTALL LIGHT LUMINAIRE ONTO EXISTING PEPCO WOOD POLE
m	METER
MGR.	MANAGER
M.H.	MOUNTING HEIGHT
M.H.W.	MEAN HIGH WATER
M.L.W.	MEAN LOW WATER
MAX.	MAXIMUM
MIN.	MINIMUM
mm	MILLIMETER
N.E.	NORTH EAST
N.W.	NORTH WEST
NPS	NATIONAL PARK SERVICE
O.C.	ON CENTER
O.D.	OUTSIDE DIAMETER
ℙ	PLATE
P#	PEPCO FEED POINT
P.C.	POINT OF CURVATURE
P.C.C.	POINT OF COMPOUND CURVE
P.G.L.	PROFILE GRADE LINE
P.I.	POINT OF INTERSECTION
P.O.C.	POINT ON CURVE
P.O.T.	POINT ON TANGENT
P.R.C.	POINT OF REVERSE CURVE
P.R.V.C.	POINT OF REVERSE VERTICAL CURVE
P.T.	POINT OF TANGENCY
P.V.C.	POINT OF VERTICAL CURVE
P.V.I.	POINT OF VERTICAL INTERSECTION
P.V.T.	POINT OF VERTICAL TANGENCY
PCC	PORTLAND CEMENT CONCRETE
PER	REGARDS (IF FOLLOWED BY NUMBER REFERS TO STANDARD SPECIFICATIONS)
PP	PENDANT POST STREETLIGHT POLE
PP/TS	COMBINATION STREETLIGHT/TRAFFIC SIGNAL PENDANT POST POLE
PROP.	PROPOSED
PVC	POLYVINYL CHLORIDE
PVMT.	PAVEMENT
R	RADIUS
R.O.W.	RIGHT OF WAY
R.R.	RAILROAD
RCP	REINFORCED CONCRETE PIPE
RD.	ROAD
REINF.	REINFORCING
RGS	RIGID GALVANIZED STEEL
RT.	RIGHT
Rxx-PP	REMOVE EXISTING PENDANT POST STREETLIGHT POLE AND LUMINAIRE
Rxx-PP/TS	REMOVE EXISTING COMBINATION STREETLIGHT/ TRAFFIC SIGNAL PENDANT POLE WITH LUMINAIRE
Rxx-WP	REMOVE EXISTING WOOD POLE WITH LUMINAIRE
S.E.	SOUTH EAST
S.W.	SOUTH WEST
SAN.	SANITARY
SHT.	SHEET
SL	STREET LIGHT
SQ.	SQUARE
STA.	STATION
STD.	STANDARD
STD. SPEC.	DCDPW STANDARD SPECIFICATIONS FOR HIGHWAYS AND STRUCTURES 2005, REVISED 2007
STR.	STRUCTURE
T.O.C.	TOP OF CURB
TFE	POLYTETRAFLUOROETHYLENE
TMS	TRAFFIC MANAGEMENT SYSTEM
TS	TRAFFIC SIGNAL POLE
TYP.	TYPICAL
U.N.O.	UNLESS NOTED OTHERWISE
V.L.F.	VERTICAL LINEAR FEET
VERT.	VERTICAL
W.B.L	WESTBOUND LANE
WASA	WATER AND SEWER ADMINISTRATION
WMATA	WASHINGTON METROPOLITAN AREA TRANSIT AUTHORITY
WQCS	WATER QUALITY CONTROL STRUCTURE

GN-03

Precision Systems, Inc.
Engineers, Planners and Architects
WASHINGTON, D.C.

NO	DESCRIPTION	NAME	DATE

REVISIONS

D.C. DEPARTMENT OF TRANSPORTATION
INFRASTRUCTURE PROJECT MANAGEMENT ADMINISTRATION
PROJECT MANAGEMENT DIVISION

KENNEDY STEET, N.W. IMPROVEMENT
FROM GEORGIA AVENUE TO NORTH CAPITOL STREET

PROJECT ENG. WZ
DESIGNED BY AYY
CHECKED BY MYH
DRAWN BY WZ/YZ
PROJECT MGR. AYY

ABBREVIATIONS

DIVISION CHIEF
DATE
FILE
SHEET 4 OF 173

p:\60570\civil\plans\pGN_N003_60570.dgn
Tuesday, July 28, 2015 AT 03:25 PM
$PLTDRVS$
$PENTBLS$

REG	STATE	PROJECT	SHEET NO.	TOTAL SHEETS
3	D.C.	FAP No. STP-8888(480)	5	173

ITEM NUMBER	QUANTITY	UNIT	DESCRIPTION
000003	3,000	HR	Employee Training
000506	4	EACH	Unassigned Special Item -EACH - 8-Foot Diameter Drywell /Leaching Chamber
000506	4	EACH	Unassigned Special Item -EACH - 000 519 - F&I Frame and Grate for Leaching Chambers
000506	2	EACH	6" Check Valve
000506	4	EACH	10" Check Valve
000506	2	EACH	15" Check Valve
000506	8	EACH	4" Ball/Union Valve
000506	2	EACH	Unassigned Special Item -EACH - 613 343 - Furnish and Install CCTV Camera Complete
000506	3	EACH	Unassigned Special Item -EACH - 613 345 - Furnish and Install Video Detection Camera Complete
000506	7,685	EACH	Unassigned Special Item -EACH - Tree, Shrub, Vine, & Gr Cover Sp. Item-Deciduou Shrub, 1 quart Grcover
000506	179	EACH	Unassigned Special Item -EACH - 613 347 - Tree, Shrub, Vine, & Grd Cover Spe Item-Evergreen Shrub, 3 gallon
000506	61	EACH	Unassigned Special Item -EACH - 613 349 -Tree, Shrub, Vine, & Grd Cover Spe Item-Deciduou Shrub, 3 gallon
000506	1	EACH	Unassigned Special Item -EACH - 613 451 - Partnering
000509	683	LF	Unassigned Special Item -LF - 000 527 - Precast Concrete Valley Gutter (2" Deep x 2' wide)
000509	684	LF	Miscellaneous Fencing Special Item - Custom Ornamental Metal Tree Fence
000511	1	LS	Unassigned Special Item -LS - 605 003 Building Entrance Treatment for ADA Purpose
000511	1	LS	Unassigned Special Item -LS - Public Art
000514	5,300	SF	Unassigned Special Item -SF - DuraTherm Pavement Marking for Cross Walks
000514	320	SF	Unassigned Special Item -SF - 000 523 - Thermoplastic Logo on Asphalt Pavement
000514	65	SF	Unassigned Special Item -SF - 000 525 - Thermoplastic Logo Signs hung on poles
000515	126	SY	Unassigned Special Item -SY - 000 529 - Steel Grating for Recessed Landscape Planters and Boardwalkers
108002	1	LS	Mobilization
108004	1	LS	Progress Photographs
108006	1	LS	Record Drawings and As-Built Drawings
108012	1	LS	Engineer's Field Facilities
108016	1	LS	Field Layout
202002	2,484	CY	Common Excavation
202004	955	CY	Hard Surface Pavement Excavation
205002	145	CY	Structure Excavation
206002	60	CY	Structure Backfill
207002	546	CY	Trench Excavation and Backfill
209002	303	CY	Aggregate Base Course
209004	326	CY	Aggregate Base Course for LID #57 stone
209006	59	CY	Aggregate Base Course for LID #8 stone
209008	273	CY	Aggregate Base Course for #2 stone
209012	51	CY	Sandy Gravel Filter Layer for LID
212002	30	EACH	Test Pit
302002	4	EACH	Valve Casing
303002	4	EACH	Abandon Valve Casing
303004	4	EACH	Remove Fire Hydrant
305004	80	LF	Ductile Iron Pipe, 6 Inch
305022	3000	LBS	Extra Fitting - Contractor Furnished
306004	4	EACH	Gate Butterfly Valve, 6 Inch
307002	4	EACH	Set Fire Hydrant
307006	1	EACH	Adjust Fire Hydrant
308012	396	LF	Replace Water Service Pipe
308016	11	EACH	Furnish&Install Water Meter Housing, Frame& Cover
308022	9	EACH	Adjust Water Meter Unit
308026	6	EACH	Reset Water Meter Unit
309002	55	VLF	Sewer Manhole on Sewer 48 Inch and Less Dia.
309991	1	EACH	Sewer Manhole Special Item - EACH - Standard 4' inside diameter
309991	2	EACH	Sewer Manhole Special Item - EACH - 309 995 - 6' inside diameter manhole
310002	2	EACH	F&I Standard Basin
310004	23	EACH	F&I Standard Double Basin
310006	6	EACH	F&I Standard Triple Basin
310008	1009	LF	Basin Connect PCC Pipe, Class III, 15 Inch
310010	70	LF	Basin Connect PCC Pipe, Class III, 18 Inch
310022	8	EACH	LID Underdrain connection to catch basin
310024	3	EACH	LID Underdrain connection to sewer
310028	12	EACH	Domed overflow grate and riser
311002	56	EACH	Adjust Sewer-Water-Utility Manhole Frame
311010	7	EACH	Adjust Standard Basin Top
311020	4	EACH	Manhole Adapter Ring
311026	3	EACH	Replace Existing Basin with Double Basin
311028	2	EACH	Replace Existing Basin with Triple Basin
311991	2	EACH	Adjust,Rebuild&Replace Manhole&Catchbasin- Special Item -EA- 310 005 - Furnish and Install Modified Standard Double Basin
311991	4	EACH	Adjust,Rebuild&Replace Manhole&Catchbasin- Special Item -EA- 311 003 - Modify Sewer-Water-Utility Manhole Top
312006	1	EACH	Replace Standard Basin Top
313002	24	EACH	Abandon Basin Connecting Pipe
313006	24	EACH	Abandon Basin
314086	39	LF	PVC Pipe, SDR 35, Gasket, 10 Inch
314090	44	LF	PVC Pipe, SDR 35, Gasket, 15 Inch
315002	1	LS	Pipe Sewer TV Inspection - LS -
316993	11	EACH	Sewer Connection and Cleanout Special Item - EACH - 316 001 - Observation Well
324002	5	EACH	PCC In-Line Thrust Block
327016	50	LF	Solid Trench Drain Cover, 25-30 Inches
327991	220	LF	Sdwlk Intercept. Drain, Connection,Grating&Trap Special Item Trench Drain
328002	15	EACH	Clean Storm Sewer Structure
402002	134	TON	HMA Base Course, 19 mm
402008	2,545	TON	HMA Surface Course, 9.5 mm
403002	28,278	SY	Tack Coat
405016	20	TON	Temporary AC, HMA Surface Course, 12.5 mm
410002	28,278	SY	Pavement Profiling (Milling)
501034	70	BAGS	Additional Standard Portland Cement
501991	5	CY	Portland Cement Concrete Pavement Special Item -CY - Cast-in-Place at Landscape infiltration Gaps(LIG)
502004	552	CY	PCC Base for Utility Cuts
502010	421	CY	PCC Base, 10 Inch
504006	333	CY	PCC Driveway-Alley Entrance, 7 Inch
505030	960	EACH	Anchor Bolts - Paving
505034	10	CY	Repair PCC Base
506002	272	CY	PCC Bus Stop Pad
507004	46	CY	PCC Property Wall
507006	103	CY	Stone Masonry Wall
507008	10	CY	PCC Steps
507010	15	CY	Standard PCC Coping
507016	262	CY	PCC Edge restraint for permeable paving
600007	30	CY	Incidental Construction Special Item - CY - Brick Clad Curved Wall
600027	1,349	SY	Incidental Construction Special Item - SY - Deep Soil Conditioning
600027	15	SY	Incidental Construction Special Item - SY - Flexible porous pavement for sidewalks
600027	410	SY	Incidental Construction Special Item - SY - 600 031 - Permeable Clay Brick Unit Pavers
601002	1,591	LF	Underdrain Pipe, 4 Inch
601004	526	LF	Underdrain Pipe, 6 Inch
601010	90	LF	Underdrain Connect Pipe, 6 Inch
601016	11	EACH	Underdrain cleanout cover paved area
601018	59	VLF	Underdrain Pipe Risers
000506	16	EACH	Unassigned Special Item - 601 994 - Underdrain cleanout cover in landscape
602010	2	CY	LID Splash Stone, RipRap
602012	6	CY	LID Splash Stone, River Rock
604004	60	LF	Chain Link Fence, 6 Ft. Ht.
604040	40	LF	Reset Chain Link Fence
604060	261	LF	Ornamental Safety Fence
604991	50	LF	Miscellaneous Fencing Special Item - LF - Relocate Ornamental Fence
605006	5,559	SY	PCC Sidewalk, 4 Inch
605008	140	SY	PCC Sidewalk, 6 Inch
605026	7,665	SY	Brick Sidewalk on PCC Base
605044	125	SY	Permeable Interlocking Concrete Pavers
605993	110	SY	Sidewalks & Driveway Special Item - SY - 605 009 - Flexible Porous Sidewalk
606036	520	LF	PCC Mountable Curb, 10 to 13 Inch Depth
606048	85	SY	PCC Gutter, 7 to 10 Inch Depth x 12-24 Inch Width
606064	9,048	LF	Furnish and Set 8"x12" Granite Straight Curb
606066	515	LF	Furnish&Set 8"x12" Granite Circular Curb Radius Under 10ft
606068	1,908	LF	Furnish&Set8"x12"Granite Circular Curb Radius10-100Ft
606098	35	EACH	PCC Wheelchair/Bicycle Ramp - New Construction
606100	60	EACH	PCC Wheelchair/Bicycle Ramp - Existing Construction
606108	10,654	SF	Brick Gutter
606112	4	CY	PCC LID Curb Inlet/Outlet & Gutter Transitions
607002	24	SY	Seed
607016	745	SY	Sod
607030	655	CY	Planting Soil Mix
607032	1,960	SY	Mulch
607042	518	CY	Bioretention Soil
607044	1,962	CY	Sand Based Structural Soil
607052	279	CY	Sand
608002	20	EACH	Remove Tree and Stump up to 6 Inch Dia.
608004	3	EACH	Remove Tree and Stump 6 to 12 Inch Dia.
608006	1	EACH	Remove Tree and Stump 12 to 18 Inch Dia.
608008	3	EACH	Remove Tree and Stump 18 to 24 Inch Dia.
608066	1	EACH	Prune Tree 36 inch to 42 Inch Dia.
608068	2	EACH	Prune Tree over 42 inch Dia.
608072	76	EACH	Tree Protection and Replacement
608078	220	LF	Steel Edging
608096	20	EACH	Park Benches
608102	60	EACH	Bicycle Lockers
608106	8	EACH	Litter Baskets
608114	25	HR	Tree Trimming
608122	517	EACH	Perennial, Quart
608124	5,356	EACH	Perennial, 1 gallon
608126	280	EACH	Perennial, 2.5 gallon
608130	14	EACH	Evergreen Shrub, 5 gallon
608132	83	EACH	Evergreen Shrub, 10 gallon
608138	133	EACH	Deciduous Shrub, 5 gallon
608140	126	EACH	Deciduous Shrub, 10 gallon
608158	22	EACH	Deciduous Tree 2-3" Cal, B &B
608160	55	EACH	Deciduous Tree 3-4" Cal, B &B
612006	1	LS	Construction Lane Closing
612010	60	EACH	Temporary Construction Sign Supports
612014	380	SF	Construction Warning and Detour Signs
612016	360	EACH	Reflectorized Traffic Cones
612018	190	EACH	Flashing Amber Warning Lights, Type "B"
612026	120	EACH	Construction Sign Warning Flags
612028	20	EACH	Type III PVC Barricade
612034	300	EACH	Traffic Drums
612054	11,623	LF	Thermoplastic Pavement Marking, 4 Inch
612056	480	LF	Thermoplastic Pavement Marking, 4 Inch Dash
612058	8,097	LF	Thermoplastic Pavement Marking, 6 Inch
612064	12,257	LF	Thermoplastic Pavement Marking, 12 Inch
612068	4	EACH	Thermoplastic Pavement Letter
612070	2	EACH	Thermoplastic Pavement Arrow
612074	42	EACH	Thermoplastic Pavement Bicycle Marking, 4 Foot
612104	9	EACH	Steel Protection Plate
612110	30	LF	Preformed Pavement Markings, Lines
612112	3	LF	Preformed Pavement Markings, Symbols and Letters
613006	17	EACH	Remove Abandoned Traffic Signal/Street Light Pole Foundation
613008	11	EACH	F&I PCC Foundation For Traffic Sig /Pendant Post St Lt Pole
613030	29	EACH	F&I Galvanized Steel Transformer Base
613036	20	LF	Furnish&Install One 2 In&Two 4 In PVC Encased Elec Conduits
613038	281	LF	Furnish&Install One 2 In&One 4 In PVC Encased Elec Conduits
613040	252	LF	Furnish&Install Four 4 In PVC Encased Electrical Conduits
613050	2	EACH	F&I Pcc Foundation For Controller Cabinet
613052	2	EACH	Fur Temp Port Concrete Base M.336-S&M.336-Ss Traf Sig Cab
613054	18	EACH	Fur Temp Port Conc Base 20 Ft Steel Traf Pole on Trans Base
613056	20	EACH	Relocate Any Temporary, Portable, Concrete Base
613058	29	EACH	F&I 20 Foot Tall Steel Traffic Signal Pole
613078	10	EACH	Furnish&Install 8 Ft Mast Arm w/Clamp & Removable
613098	10,380	LF	F&I 7 Conductor 14 Awg Stranded Electrical Traffic Sig Cable
613100	5,080	LF	F&I 4 Conduct 18 Awg Shielded Stranded Elec. Traf Sig Cable
613106	800	LF	Furnish&Inst 25 Pair 19 Awg Underground Communications Cable
613108	4,000	LF	Furnish&Inst 25 Pair 19 Awg Overhead Communications Cable
613150	50	EACH	Furnish Red Ball Led Module (12 inch)
613156	50	EACH	Furnish Yellow Ball Led Module (12 inch)
613162	50	EACH	Furnish Green Ball Led Module (12 inch)
613166	1	EACH	Furnish Yellow Arrow Led Module
613168	1	EACH	Furnish Green Arrow Led Module
613192	38	EACH	12 In Overlay White Wlkng Person & Portlnd Orange Led Mod
613194	38	EACH	Furnish 12 Inch Portland Orange Countdown Led Module
613202	36	EACH	F&I 3 Section Conventional Traf Sig Head On Pole(Lenses 12")
613206	1	EACH	F&I 5 Section Conventional Traf Sig Head On Pole(Lenses 12")
613208	9	EACH	F&I 3 Section Conv Traf Sig Head On Mast Arm(Lenses 12")
613214	3	EACH	F&I 3 Sec Optically Program Traf Head On Pole(Lenses 12")
613220	1	EACH	F&I 3 Sec Optically Program Traf Head Mast Arm(Lenses 12")
613226	38	EACH	F&I 2 Sect Conventional Pedestrian Signal Head on Pole(12")
613240	18	EACH	F&I Accessible Pedestrian Signal Control Unit
613322	2	EACH	F&I Traffic Signal Controller And Cabinet
613334	2	EACH	Remove Abandoned Traff Signal Controller Cabinet Foundation
613338	2	EACH	Remove Traffic Signal Pole And Traffic Signal Equipment
613340	2	EACH	Remove Traffic Signal Controller And Cabinet
613346	4,750	LF	Remove Electrical Cable (Any Type)
614056	10	EACH	Root Pruning
614078	4	EACH	F&I 36" x 36" x 36" Manhole
614082	2	EACH	Remove Manhole over 24" x 24"
614084	22	EACH	F&I 48" x 48" x 48" Manhole
614122	445	LF	F&I 1-2" Schedule 40 Rigid PVC Conduit
614198	1,443	LF	F&I 6-4" Schedule 40 Rigid PVC Conduits (duct bank)
614200	864	LF	F&I 6-4" and 1-2" Schedule 40 Rigid PVC Conduits (duct bank)
614202	23	LF	F&I 6-4" and 2-2" Schedule 40 Rigid PVC Conduits (duct bank)
614210	32	LF	F&I 2-4" Schedule 40 Rigid PVC Conduit (duct bank)
614230	2,946	LF	F&I #10 Stranded Wire
614242	1,392	LF	F&I #6 Stranded Wire
614290	5,331	LF	F&I #0000 Stranded Wire
614332	1,984	LF	F&I #8 Stranded Ground Wire
614350	1,777	LF	F&I #2 Stranded Ground Wire
614394	4,010	LF	Remove Overhead Conductors [Defined in Pay Item Description]
614424	25	EACH	F&I 15" B.C. Street Light Foundation
614430	1	EACH	Remove Street Light Pole Foundation
614452	25	EACH	F&I 15" B.C Steel Transformer Base
614544	25	EACH	F&I 28.5' Steel Pendant Pole with up to 8' Arm
614568	8	EACH	Remove Pendant Pole 30 ft. Height or Less
614670	27	EACH	F&I 8 ft. Arm on Wood Pole
614682	29	EACH	Remove arm from wood pole over 8 ft. in Length
614698	29	EACH	Remove Luminaire from Wood Pole
614864	30	LF	F&I 4" PVC Rigid U-Guard on Wood Pole
614872	30	LF	F&I 1" PVC Rigid U-Guard on Wood Pole
614926	70	EACH	Banner Arm on Streetlight Pole
614993	2	EACH	Electrical Work Special Item -EACH- 613 055 - Relocate Ex. Traffic Signal Controller toTemp Portable Conc. Base
614993	2	EACH	Electrical Work Special Item -EACH- 614 083 - Remove Existing DDOT Electrical Manhole Top, Fram and Cover
614993	2	EACH	Electrical Work Special Item -EACH- 613 099 Furnish & Install Bolt-On UPS System
614993	2	EACH	Electrical Work Special Item -EACH- 614 425 - Furnish and Inst Sp Sprd Footer Foundn For Strligh or TraffSignal Pole
614993	68	EACH	Electrical Work Special Item -EACH- 614 805 - F&I 150Watt Teardrop LED Fixture Complete With Photocell
614995	33	LF	Electrical Work Special Item -LF- 614 213 - F&I 2-4" and 2-2" Schedule 40 Rigid PVC Conduits
614999	1	LS	Payment to PEPCO for Connection, Disconnection, Inspection
616016	1,039	LF	Metal Sign Posts, 3.00 Pounds per Foot
616022	750	SF	Traffic Sign Panels
616036	680	SF	Remove Existing Ground Mounted Sign
616042	1	EACH	Federal Aid Project Sign
616999	1	LS	Miscellaneous Electrical Work - Special Item Determine location of Ex. Electric Conduit and Relocate
618002	1	LS	Erosion and Sediment Control
618006	15	EACH	Rock Check Dam
618016	745	SY	Geotextile for stormwater management
618018	456	SY	Waterproof Membrane for stormwater management
703991	25	CY	Concrete for Structures Special Item - CY - 703 007 - Concrete For Structures
703991	60	CY	Concrete for Structures Special Item - CY - CIP Seat Walls
703991	7	CY	Concrete for Structures Special Item - CY - 703 993 - Precast Concret Seat Walls
704004	6,900	LBS	Epoxy Coated Reinforcement Bars
706010	12,800	LBS	Structural Steel - AASHTO M270, Grade 50
707004	1	LS	Paint Existing Metalwork
709006	50	LF	Pipe Handrail

$PENTBLS$
$PLTDRVS$

P:\60570\civil\plans\PSQ_S000_60570.dgn
Monday, April 18, 2016 AT 09:37 AM

SQ-01

D.C. DEPARTMENT OF TRANSPORTATION
INFRASTRUCTURE PROJECT MANAGEMENT ADMINISTRATION
PROJECT MANAGEMENT DIVISION

KENNEDY STEET, N.W. IMPROVEMENT
FROM GEORGIA AVENUE TO NORTH CAPITOL STREET

SUMMARY OF QUANTITIES

PROJECT ENG. WZ
DESIGNED BY AYY
CHECKED BY MYH
DRAWN BY WZ/YZ
PROJECT MGR. AYY

DIVISION CHIEF
DATE
FILE
SHEET 5 OF 173

Precision Systems, Inc.
Engineers, Planners and Architects
WASHINGTON, D.C.

NO.	DESCRIPTION	NAME	DATE

REVISIONS

REG	STATE	PROJECT	SHEET NO.	TOTAL SHEETS
3	D.C.	FAP No. STP-8888(480)	6	173

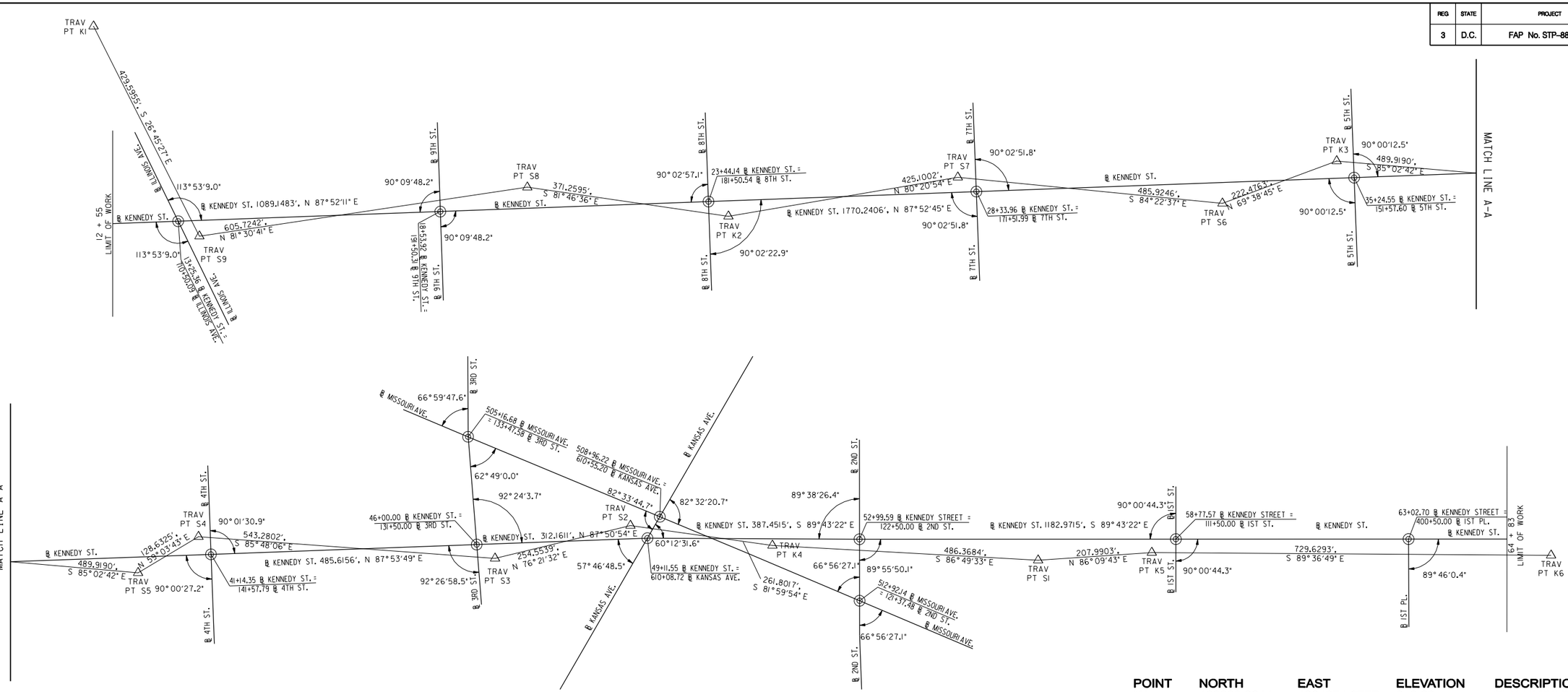

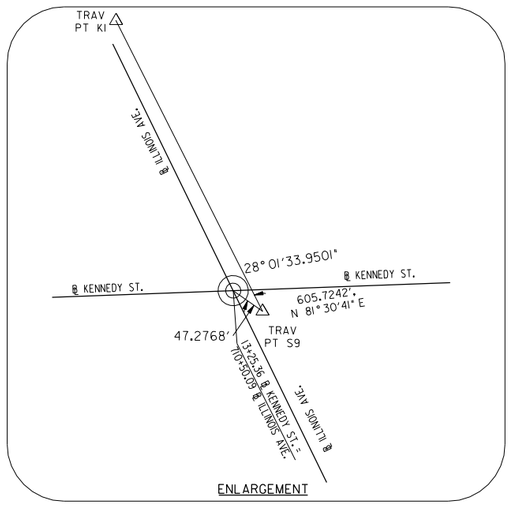

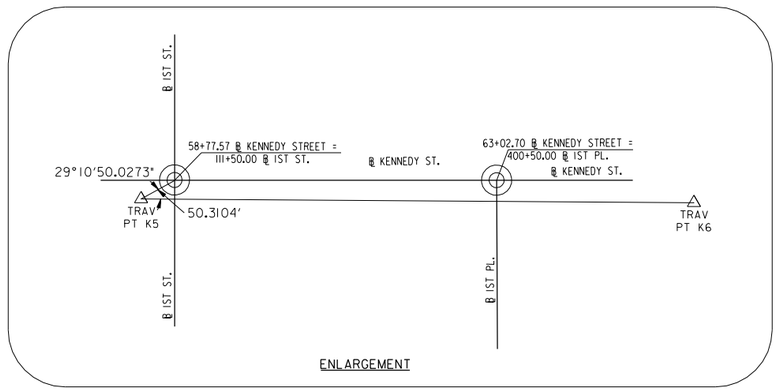

GRAPHIC SCALE

100 50 0 100 200

1" = 100'-0" HORIZ.

POINT	NORTH	EAST	ELEVATION	DESCRIPTION
K1	469999.3314	1304374.6777	249.83	2" ALUMINUM CAP
K2	469652.0464	1305534.6203	223.40	1.25" COPPER
K3	469753.0894	1306645.8751	204.42	1.25" COPPER
K4	469760.7237	1308292.7434	210.39	1.25" COPPER
K5	469747.7167	1308985.8897	215.39	1.25" COPPER
K6	469742.7972	1309715.5024	223.70	1.25" COPPER
S1	469733.7958	1308778.3658	213.58	1.25" COPPER
S2	469797.1667	1308033.4906	207.32	1.25" COPPER
S3	469737.1329	1307786.1171	201.62	1.25" COPPER
S4	469776.9058	1307244.2947	185.64	1.25" COPPER
S5	469710.7748	1307133.9633	189.13	1.25" COPPER
S6	469675.7074	1306437.2900	206.07	1.25" COPPER
S7	469723.3175	1305953.7034	212.02	1.25" COPPER
S8	469705.1478	1305167.1780	226.93	1.25" COPPER
S9	469615.7374	1304568.0890	226.62	1.25" COPPER

GS-00

Precision Systems, Inc.
Engineers, Planners and Architects
WASHINGTON, D.C.

NO	DESCRIPTION	NAME	DATE

REVISIONS

D.C. DEPARTMENT OF TRANSPORTATION
INFRASTRUCTURE PROJECT MANAGEMENT ADMINISTRATION
PROJECT MANAGEMENT DIVISION

KENNEDY STEET, N.W. IMPROVEMENT
FROM GEORGIA AVENUE TO NORTH CAPITOL STREET

PROJECT ENG. WZ
DESIGNED BY AYY
CHECKED BY MYH
DRAWN BY WZ/YZ
PROJECT MGR. AYY

SURVEY LINE AND BASELINE TIE

DIVISION CHIEF
DATE
FILE
SHEET 6 OF 173

p:\60570\civil\plans\pGS_P000_60570.dgn
Tuesday, July 28, 2015 AT 03:27 PM
$PENTBLS$
$PLTDRVS$

REG	STATE	PROJECT	SHEET NO.	TOTAL SHEETS
3	D.C.	FAP No. STP-8888(480)	7	173

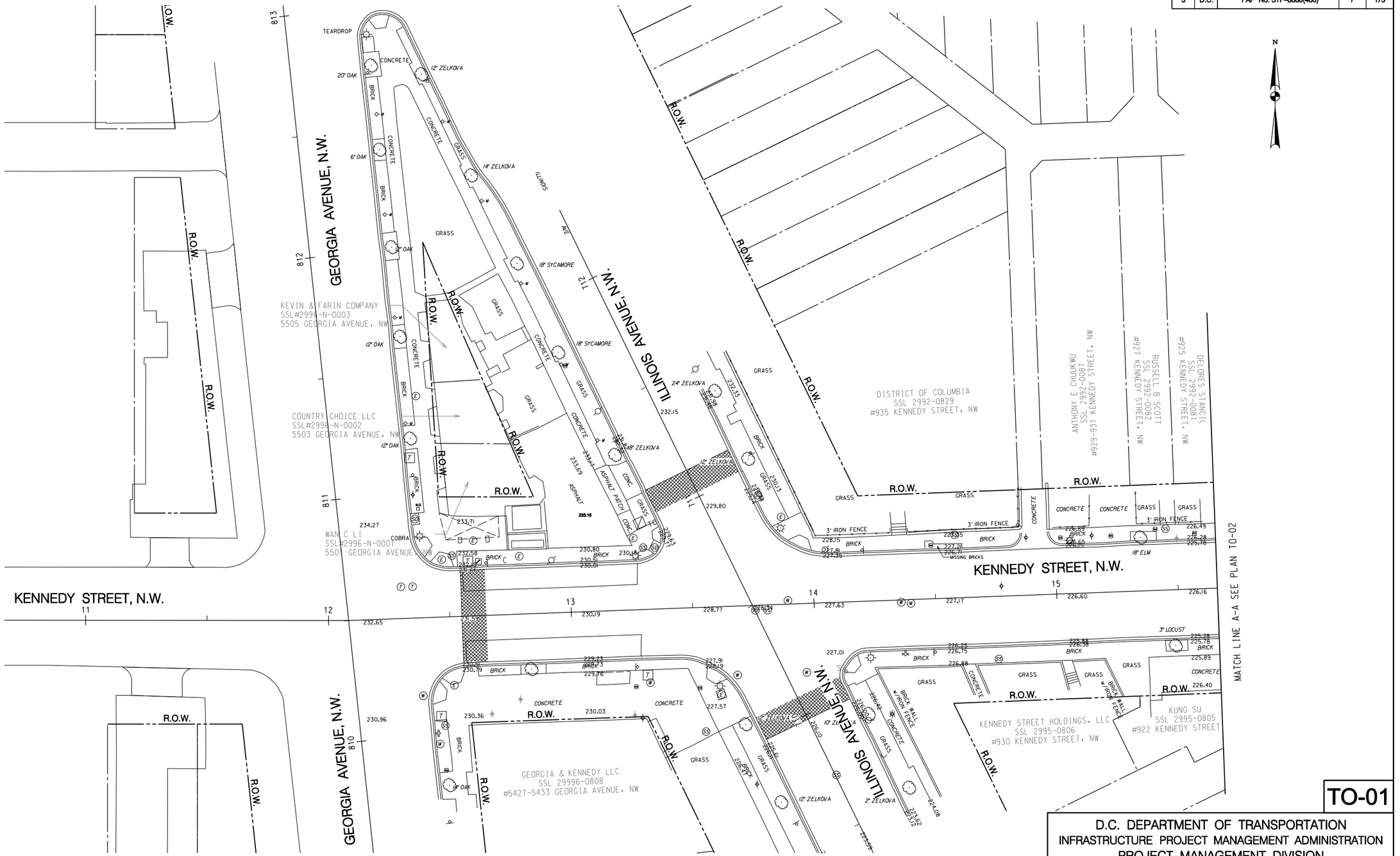

TO-01

D.C. DEPARTMENT OF TRANSPORTATION
INFRASTRUCTURE PROJECT MANAGEMENT ADMINISTRATION
PROJECT MANAGEMENT DIVISION

KENNEDY STEET, N.W. IMPROVEMENT
FROM GEORGIA AVENUE TO NORTH CAPITOL STREET

EXISTING CONDITIONS – 1

PROJECT ENG. WZ
DESIGNED BY AYY
CHECKED BY MYH
DRAWN BY WZ/YZ
PROJECT MGR. AYY

DIVISION CHIEF
DATE
FILE
SHEET 7 OF 173

Precision Systems, Inc.
Engineers, Planners and Architects
WASHINGTON, D.C.

NO.	DESCRIPTION	NAME	DATE

REVISIONS

p:\60570\civil\plans\pT0_P001_60570.dgn
Tuesday, July 28, 2015 AT 03:27 PM
$PENTBLS$
$PLTDRVS$

REG	STATE	PROJECT	SHEET NO.	TOTAL SHEETS
3	D.C.	FAP No. STP-8888(480)	8	173

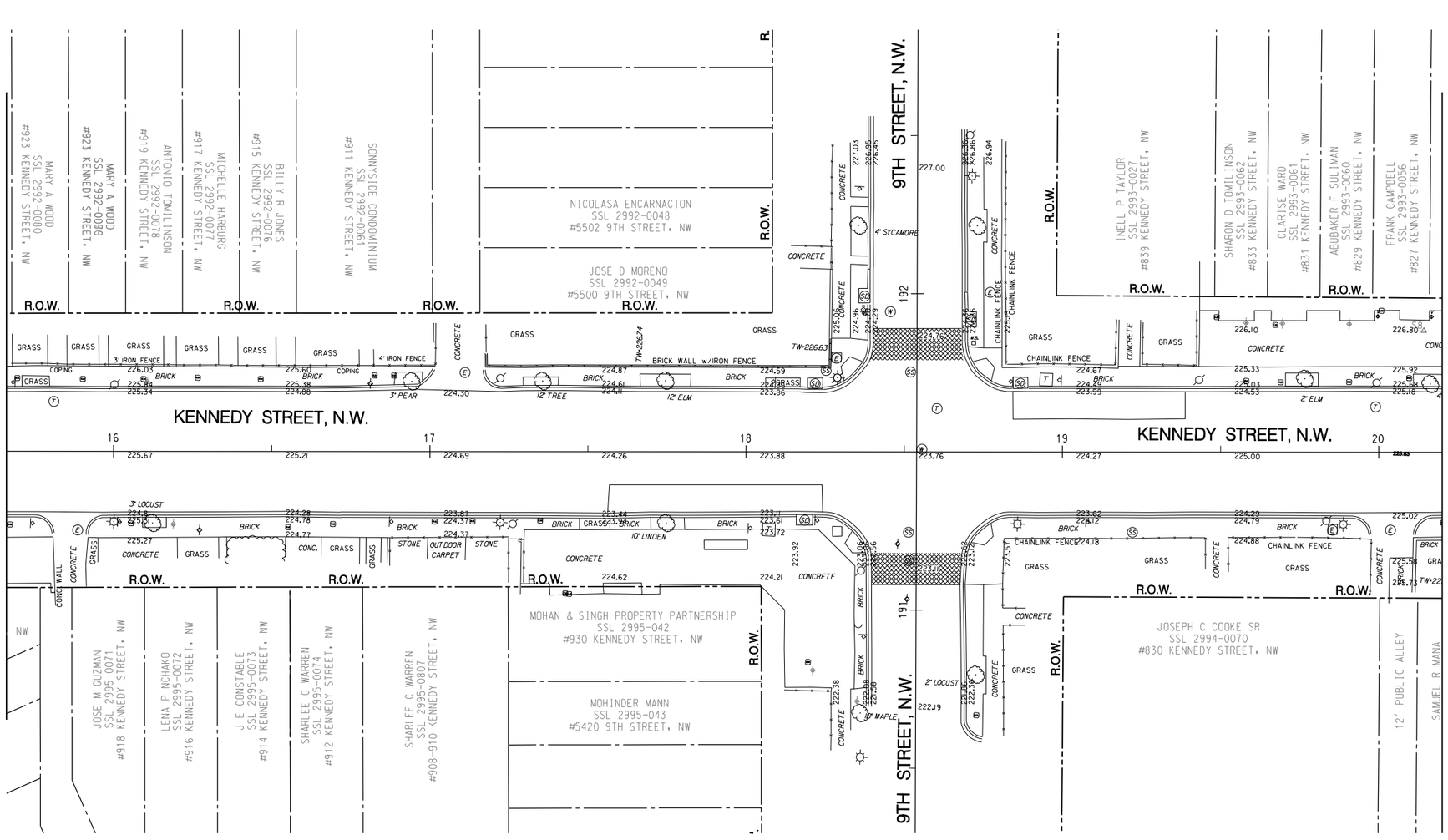

GRAPHIC SCALE

20 10 0 20 40

1" = 20'-0" HORIZ.

Precision Systems, Inc.
Engineers, Planners and Architects
WASHINGTON, D.C.

NO.	DESCRIPTION	NAME	DATE

REVISIONS

TO-02

D.C. DEPARTMENT OF TRANSPORTATION
INFRASTRUCTURE PROJECT MANAGEMENT ADMINISTRATION
PROJECT MANAGEMENT DIVISION

KENNEDY STEET, N.W. IMPROVEMENT
FROM GEORGIA AVENUE TO NORTH CAPITOL STREET

PROJECT ENG. WZ
DESIGNED BY AYY
CHECKED BY MYH
DRAWN BY WZ/YZ
PROJECT MGR. AYY

EXISTING CONDITIONS – 2

DIVISION CHIEF
DATE
FILE
SHEET 8 OF 173

p:\60570\civil\plans\pT0_P002_60570.dgn
Tuesday, July 28, 2015 AT 03:28 PM
$PLTDRVS$
$PENTBLS$

REG	STATE	PROJECT	SHEET NO.	TOTAL SHEETS
3	D.C.	FAP No. STP-8888(480)	9	173

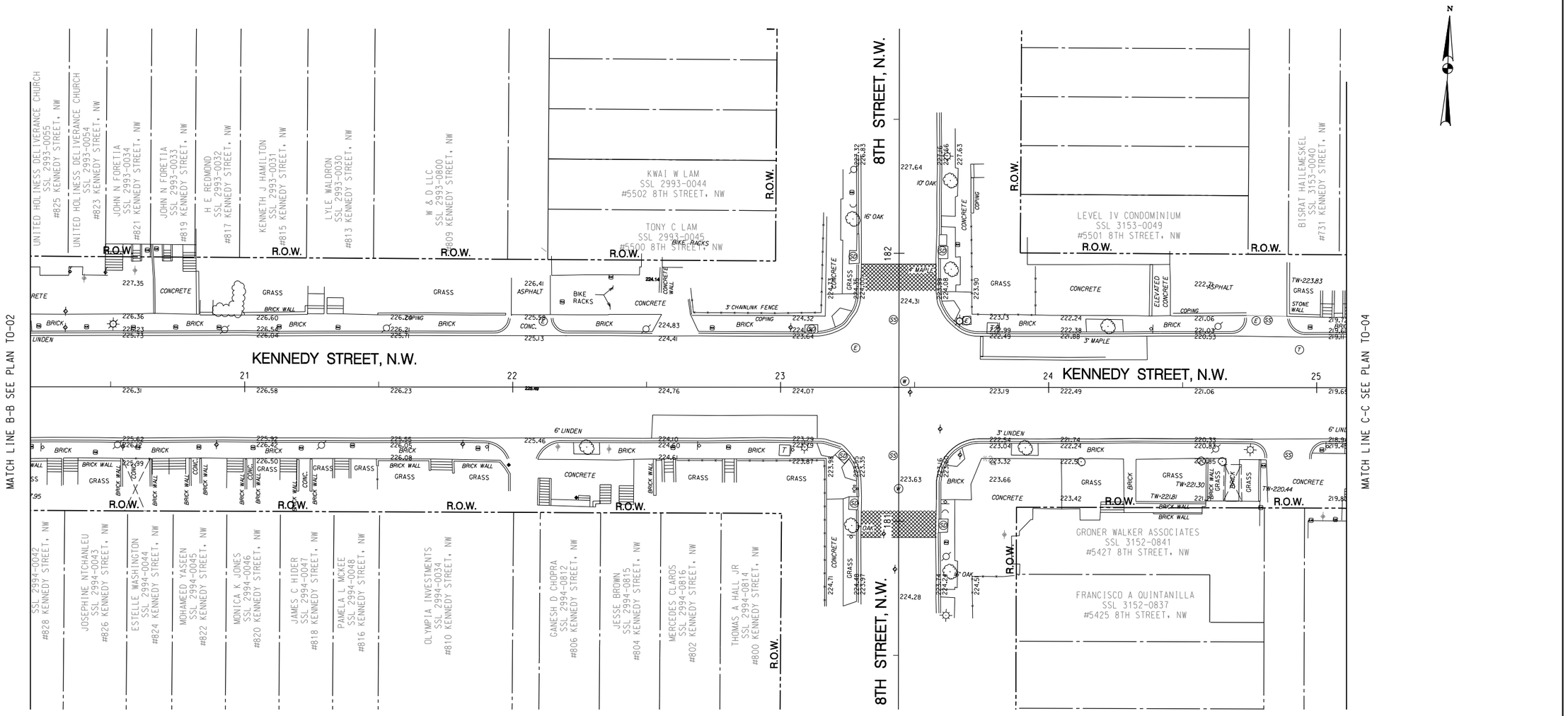

GRAPHIC SCALE

20 10 0 20 40

1" = 20'-0" HORIZ.

Precision Systems, Inc.
Engineers, Planners and Architects
WASHINGTON, D.C.

NO	DESCRIPTION	NAME	DATE

REVISIONS

TO-03

D.C. DEPARTMENT OF TRANSPORTATION
INFRASTRUCTURE PROJECT MANAGEMENT ADMINISTRATION
PROJECT MANAGEMENT DIVISION

KENNEDY STEET, N.W. IMPROVEMENT
FROM GEORGIA AVENUE TO NORTH CAPITOL STREET

PROJECT ENG. WZ
DESIGNED BY AYY
CHECKED BY MYH
DRAWN BY WZ/YZ
PROJECT MGR. AYY

EXISTING CONDITIONS – 3

DIVISION CHIEF
DATE
FILE
SHEET 9 OF 173

p:\60570\civil\plans\pTO_P003_60570.dgn
Tuesday, July 28, 2015 AT 03:28 PM
$PLTDRVS$ $PENTBLS$

REG	STATE	PROJECT	SHEET NO.	TOTAL SHEETS
3	D.C.	FAP No. STP-8888(480)	10	173

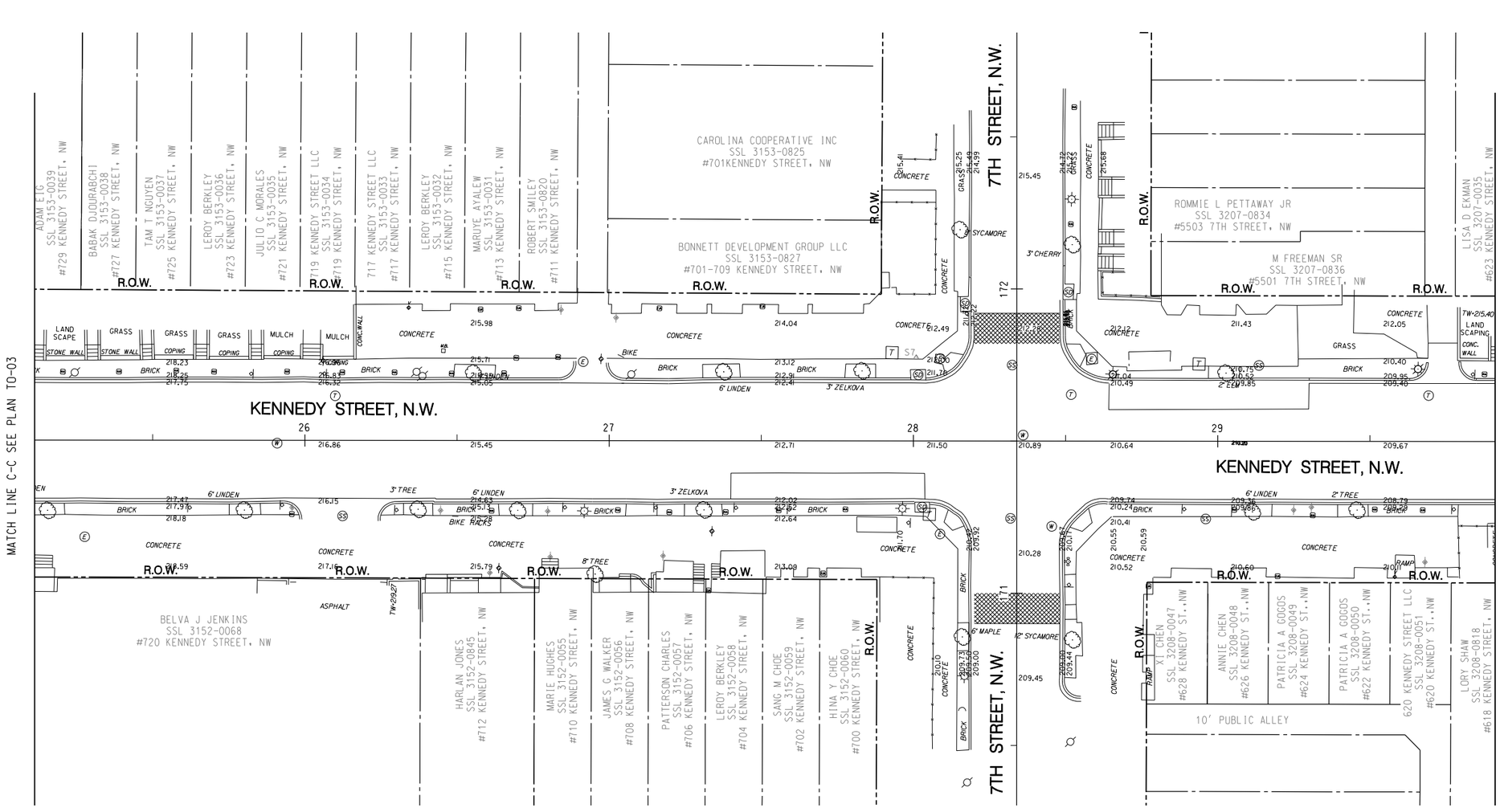

GRAPHIC SCALE

20 10 0 20 40

1" = 20'-0" HORIZ.

Precision Systems, Inc.
Engineers, Planners and Architects
WASHINGTON, D.C.

NO.	DESCRIPTION	NAME	DATE

REVISIONS

TO-04

D.C. DEPARTMENT OF TRANSPORTATION
INFRASTRUCTURE PROJECT MANAGEMENT ADMINISTRATION
PROJECT MANAGEMENT DIVISION

KENNEDY STEET, N.W. IMPROVEMENT
FROM GEORGIA AVENUE TO NORTH CAPITOL STREET

PROJECT ENG. WZ
DESIGNED BY AYY
CHECKED BY MYH
DRAWN BY WZ/YZ
PROJECT MGR. AYY

EXISTING CONDITIONS – 4

DIVISION CHIEF
DATE
FILE
SHEET 10 OF 173

p:\60570\civil\plans\pT0_P004_60570.dgn $PENTBLS$ $PLTDRVS$
Tuesday, July 28, 2015 AT 03:28 PM

REG	STATE	PROJECT	SHEET NO.	TOTAL SHEETS
3	D.C.	FAP No. STP-8888(480)	11	173

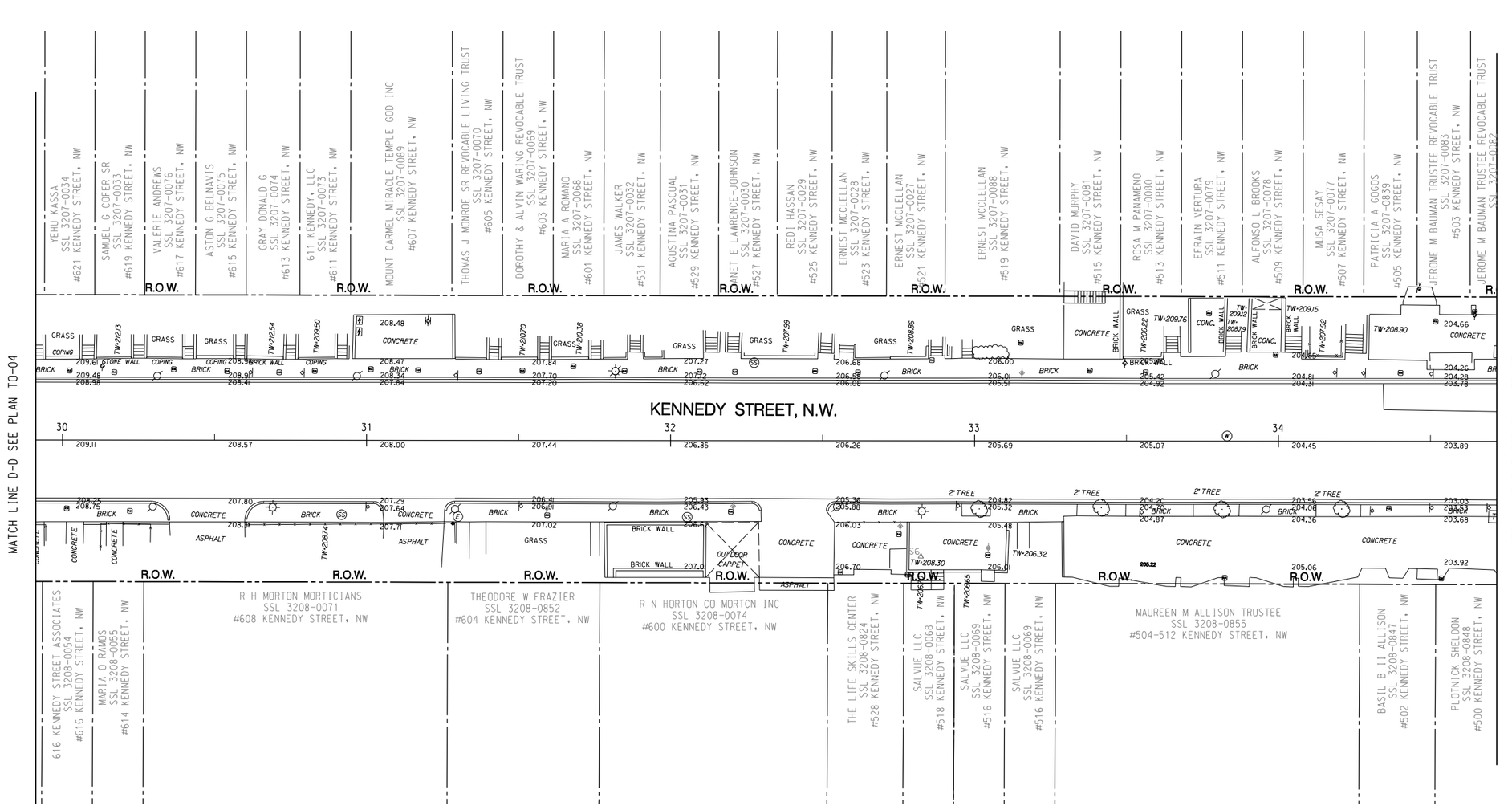

GRAPHIC SCALE

20 10 0 20 40

1" = 20'-0" HORIZ.

Precision Systems, Inc.
Engineers, Planners and Architects
WASHINGTON, D.C.

NO.	DESCRIPTION	NAME	DATE

REVISIONS

TO-05

D.C. DEPARTMENT OF TRANSPORTATION
INFRASTRUCTURE PROJECT MANAGEMENT ADMINISTRATION
PROJECT MANAGEMENT DIVISION

KENNEDY STEET, N.W. IMPROVEMENT
FROM GEORGIA AVENUE TO NORTH CAPITOL STREET

EXISTING CONDITIONS – 5

PROJECT ENG. WZ
DESIGNED BY AYY
CHECKED BY MYH
DRAWN BY WZ/YZ
PROJECT MGR. AYY

DIVISION CHIEF
DATE
FILE
SHEET 11 OF 173

p:\60570\civil\plans\pT0_P005_60570.dgn
Tuesday, July 28, 2015 AT 03:29 PM
$PENTBLS$
$PLTDRVS$

REG	STATE	PROJECT	SHEET NO.	TOTAL SHEETS
3	D.C.	FAP No. STP-8888(480)	12	173

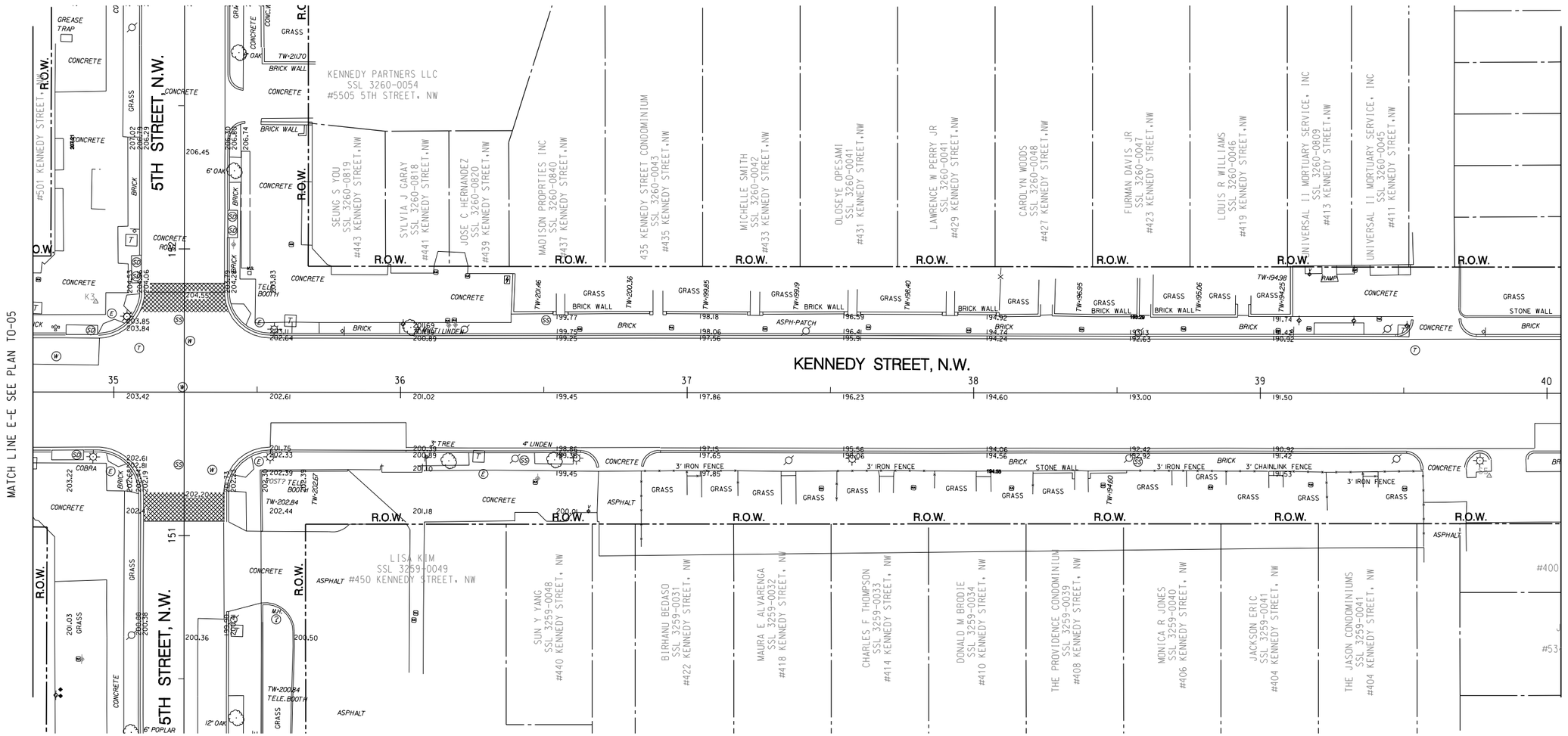

GRAPHIC SCALE

20 10 0 20 40

1" = 20'-0" HORIZ.

Precision Systems, Inc.
Engineers, Planners and Architects
WASHINGTON, D.C.

NO.	DESCRIPTION	NAME	DATE

REVISIONS

TO-06

D.C. DEPARTMENT OF TRANSPORTATION
INFRASTRUCTURE PROJECT MANAGEMENT ADMINISTRATION
PROJECT MANAGEMENT DIVISION

KENNEDY STEET, N.W. IMPROVEMENT
FROM GEORGIA AVENUE TO NORTH CAPITOL STREET

EXISTING CONDITIONS – 6

PROJECT ENG. WZ
DESIGNED BY AYY
CHECKED BY MYH
DRAWN BY WZ/YZ
PROJECT MGR. AYY

DIVISION CHIEF
DATE
FILE
SHEET 12 OF 173

p:\60570\civil\plans\pT0_P006_60570.dgn
Tuesday, July 28, 2015 AT 03:29 PM
$PLTDRVS$ $PENTBLS$

REG	STATE	PROJECT	SHEET NO.	TOTAL SHEETS
3	D.C.	FAP No. STP-8888(480)	13	173

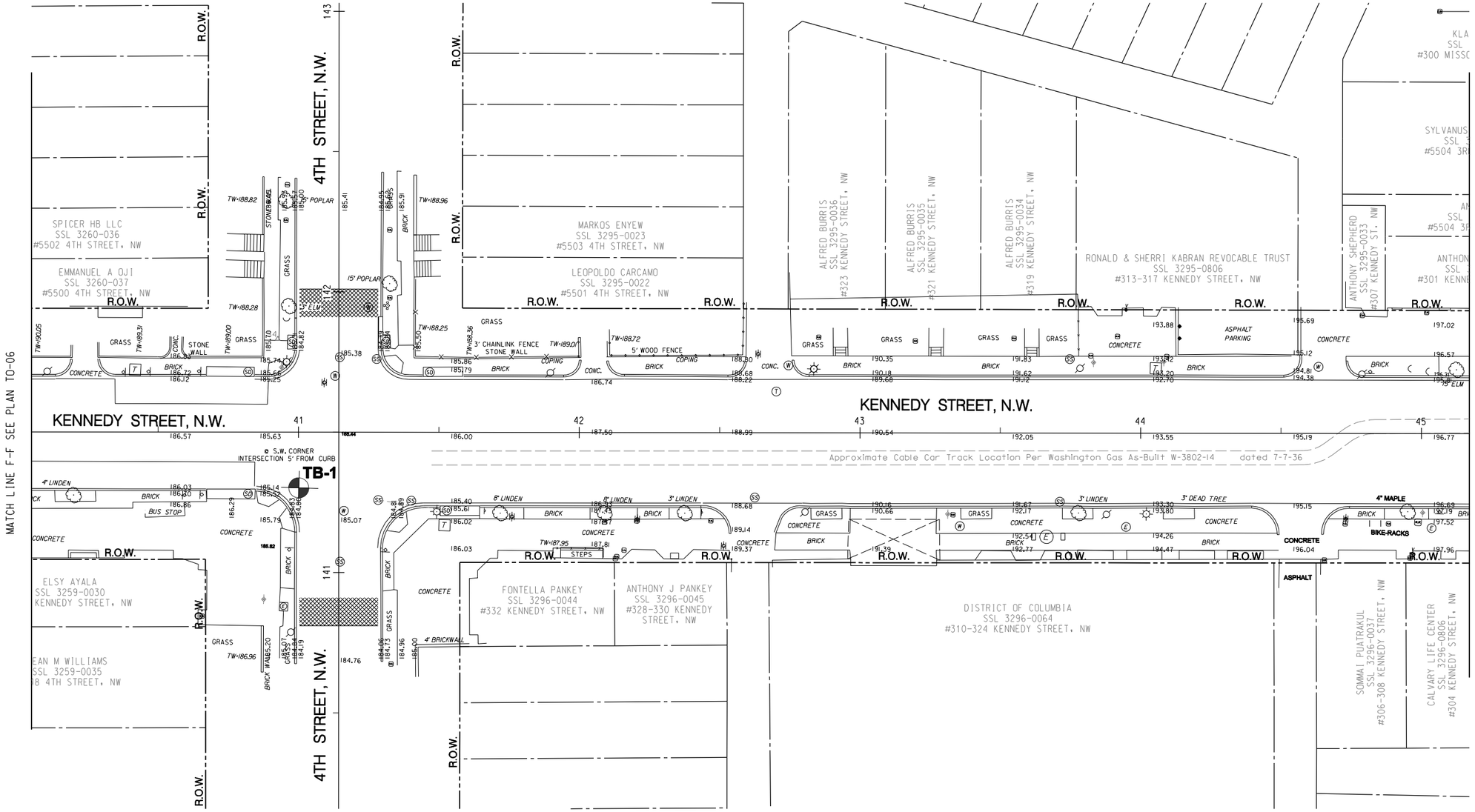

N

GRAPHIC SCALE

20 10 0 20 40

1" = 20'-0" HORIZ.

TO-07

D.C. DEPARTMENT OF TRANSPORTATION
INFRASTRUCTURE PROJECT MANAGEMENT ADMINISTRATION
PROJECT MANAGEMENT DIVISION

KENNEDY STEET, N.W. IMPROVEMENT
FROM GEORGIA AVENUE TO NORTH CAPITOL STREET

EXISTING CONDITIONS – 7

PROJECT ENG. WZ
DESIGNED BY AYY
CHECKED BY MYH
DRAWN BY WZ/YZ
PROJECT MGR. AYY

DIVISION CHIEF

DATE
FILE
SHEET 13 OF 173

Precision Systems, Inc.
Engineers, Planners and Architects
WASHINGTON, D.C.

NO.	DESCRIPTION	NAME	DATE

REVISIONS

p:\60570\civil\plans\pT0_P007_60570.dgn
Tuesday, July 28, 2015 AT 03:30 PM
$PENTBLS$
$PLTDRVS$

REG	STATE	PROJECT	SHEET NO.	TOTAL SHEETS
3	D.C.	FAP No. STP-8888(480)	14	173

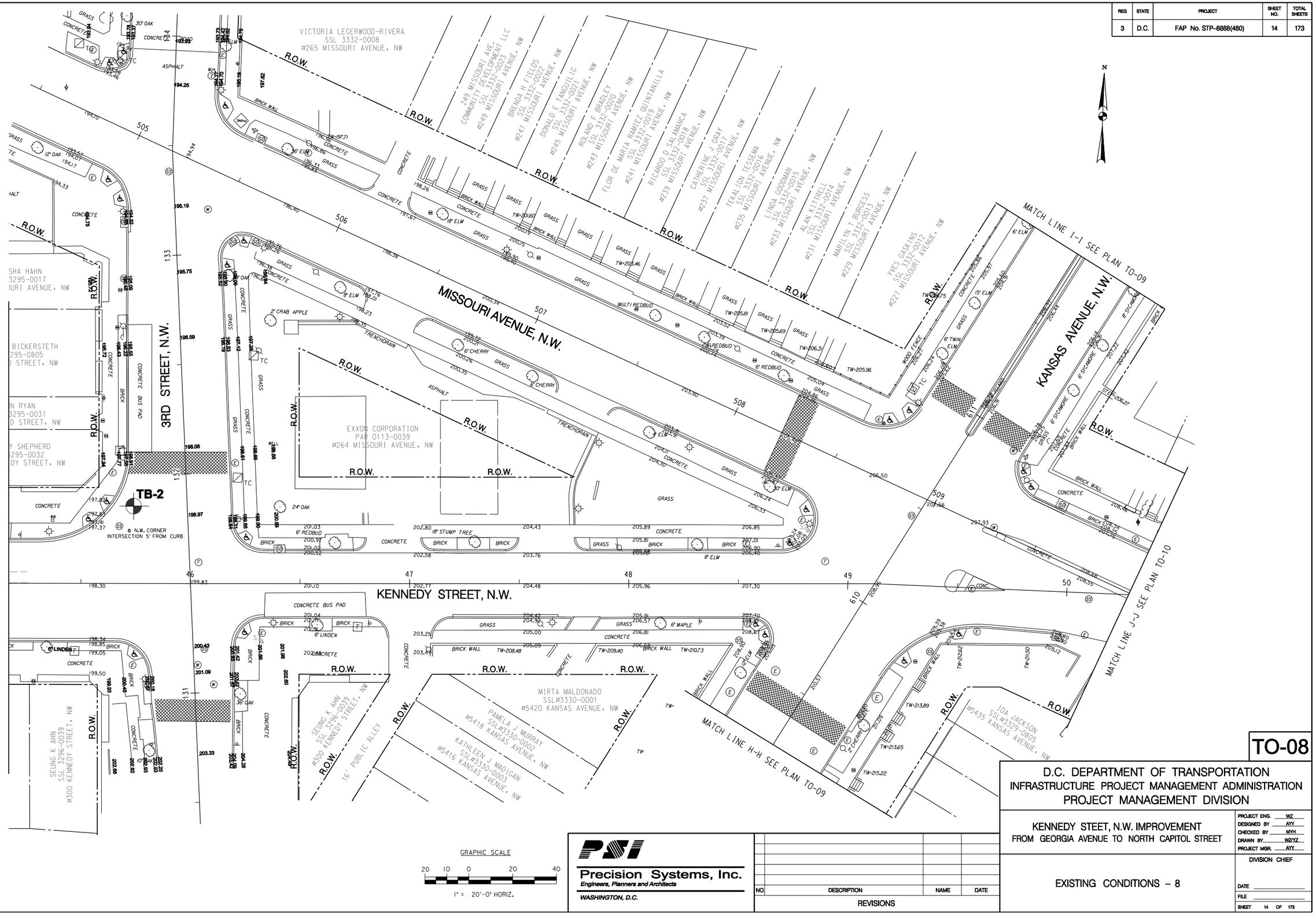

GRAPHIC SCALE

20 10 0 20 40

1" = 20'-0" HORIZ.

Precision Systems, Inc.
Engineers, Planners and Architects
WASHINGTON, D.C.

NO.	DESCRIPTION	NAME	DATE

REVISIONS

TO-08

D.C. DEPARTMENT OF TRANSPORTATION
INFRASTRUCTURE PROJECT MANAGEMENT ADMINISTRATION
PROJECT MANAGEMENT DIVISION

KENNEDY STEET, N.W. IMPROVEMENT
FROM GEORGIA AVENUE TO NORTH CAPITOL STREET

EXISTING CONDITIONS – 8

PROJECT ENG. WZ
DESIGNED BY AYY
CHECKED BY MYH
DRAWN BY WZ/YZ
PROJECT MGR. AYY

DIVISION CHIEF
DATE
FILE
SHEET 14 OF 173

p:\60570\civil\plans\pTO_P008_60570.dgn $PENTBLS$
Tuesday, July 28, 2015 AT 03:30 PM $PLTDRVS$

REG	STATE	PROJECT	SHEET NO.	TOTAL SHEETS
3	D.C.	FAP No. STP-8888(480)	15	173

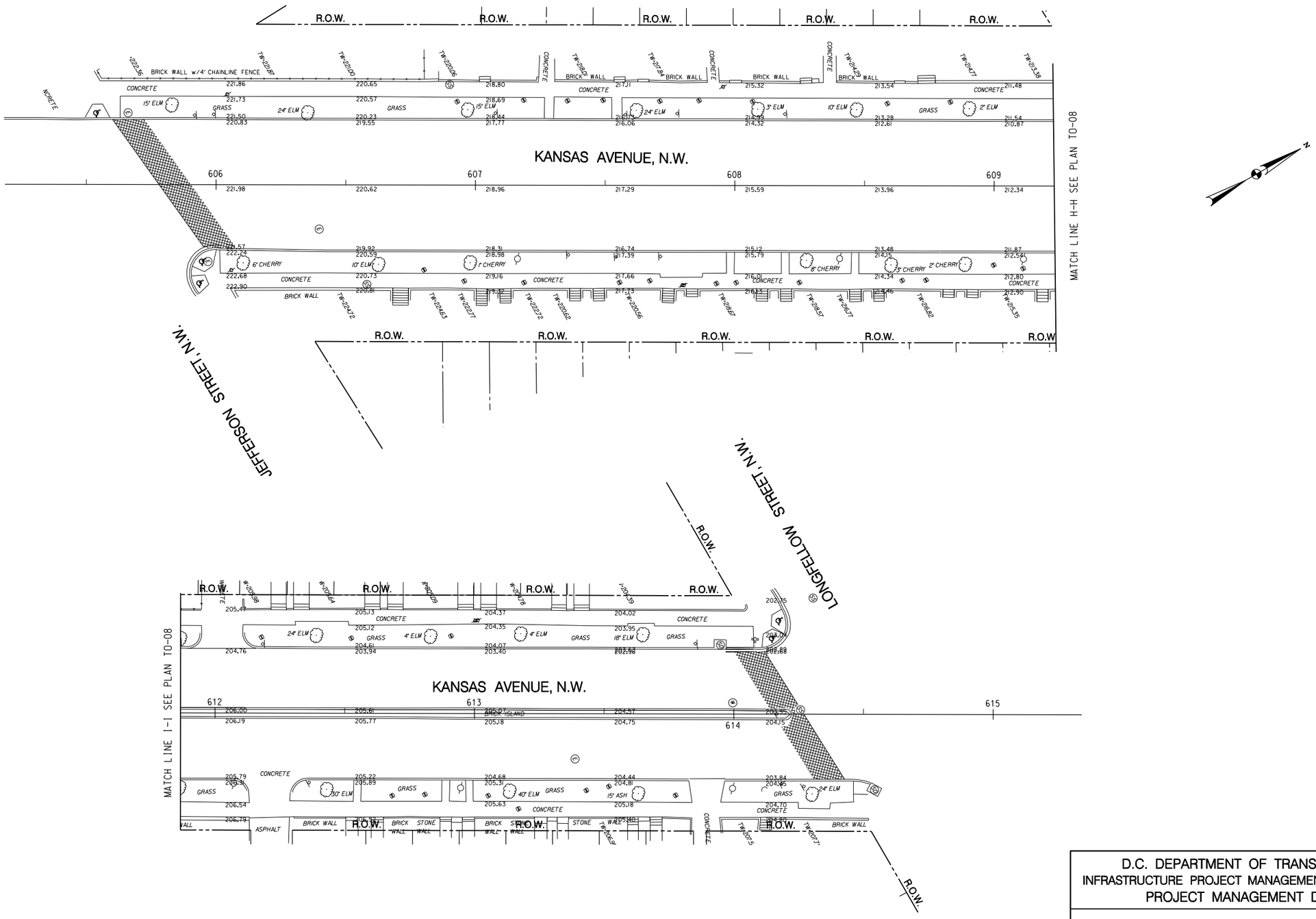

GRAPHIC SCALE

20 10 0 20 40

1" = 20'-0" HORIZ.

Precision Systems, Inc.
Engineers, Planners and Architects
WASHINGTON, D.C.

NO	DESCRIPTION	NAME	DATE

REVISIONS

TO-09

D.C. DEPARTMENT OF TRANSPORTATION
INFRASTRUCTURE PROJECT MANAGEMENT ADMINISTRATION
PROJECT MANAGEMENT DIVISION

KENNEDY STEET, N.W. IMPROVEMENT
FROM GEORGIA AVENUE TO NORTH CAPITOL STREET

PROJECT ENG. WZ
DESIGNED BY AYY
CHECKED BY MYH
DRAWN BY WZ/YZ
PROJECT MGR. AYY

EXISTING CONDITIONS – 9

DIVISION CHIEF
DATE
FILE
SHEET 15 OF 173

p:\60570\civil\plans\pT0_P009_60570.dgn
Tuesday, July 28, 2015 AT 03:30 PM
$PENTBLS$
$PLTDRVS$

REG	STATE	PROJECT	SHEET NO.	TOTAL SHEETS
3	D.C.	FAP No. STP-8888(480)	16	173

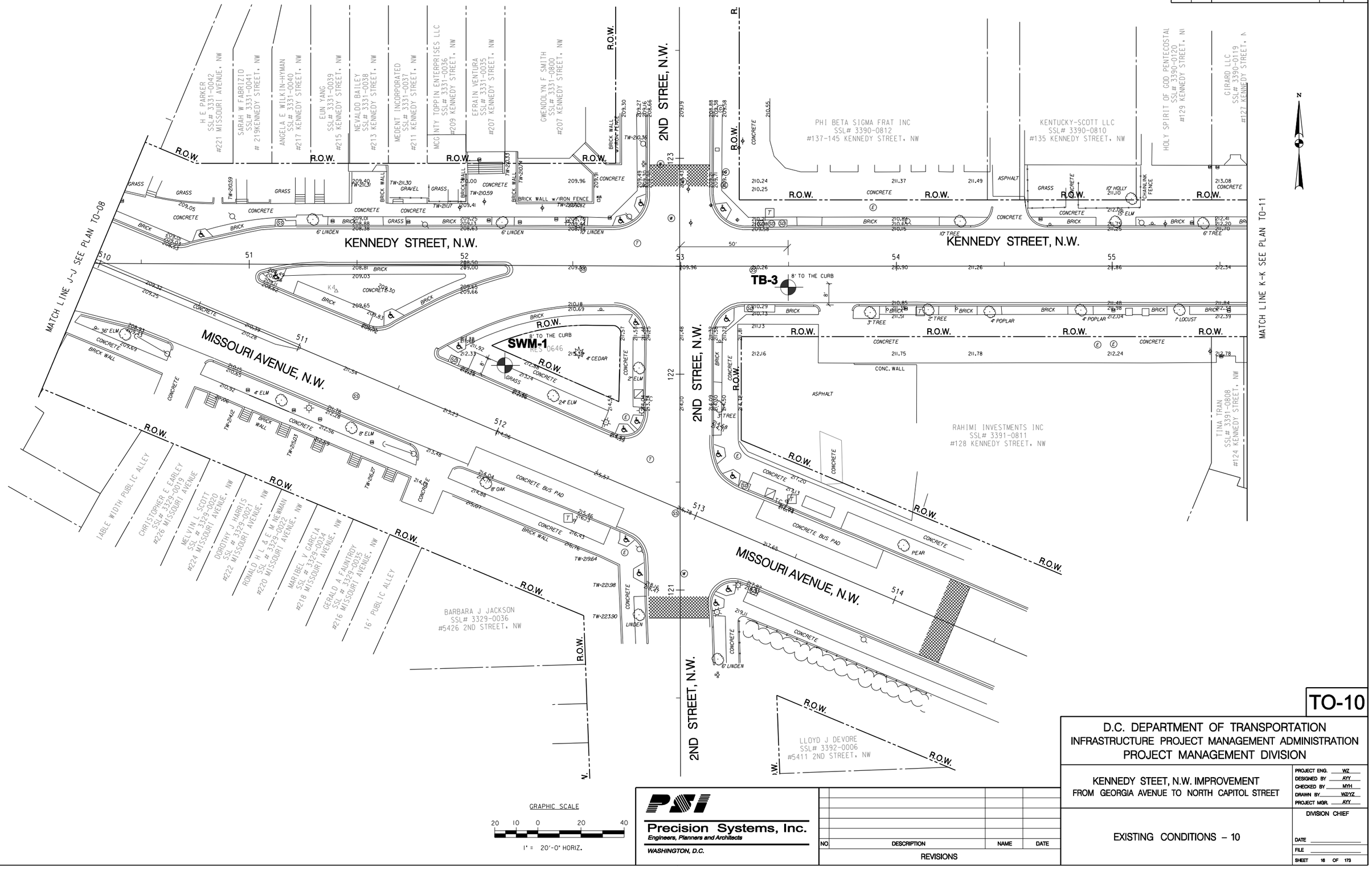

TO-10

D.C. DEPARTMENT OF TRANSPORTATION
INFRASTRUCTURE PROJECT MANAGEMENT ADMINISTRATION
PROJECT MANAGEMENT DIVISION

KENNEDY STEET, N.W. IMPROVEMENT
FROM GEORGIA AVENUE TO NORTH CAPITOL STREET

EXISTING CONDITIONS – 10

PROJECT ENG. WZ
DESIGNED BY AYY
CHECKED BY MYH
DRAWN BY WZ/YZ
PROJECT MGR. AYY

DIVISION CHIEF
DATE
FILE
SHEET 16 OF 173

Precision Systems, Inc.
Engineers, Planners and Architects
WASHINGTON, D.C.

NO	DESCRIPTION	NAME	DATE

REVISIONS

p:\60570\civil\plans\pTO_P010_60570.dgn
Tuesday, July 28, 2015 AT 03:31 PM
$PENTBLS$
$PLTDRVS$

REG	STATE	PROJECT	SHEET NO.	TOTAL SHEETS
3	D.C.	FAP No. STP-8888(480)	17	173

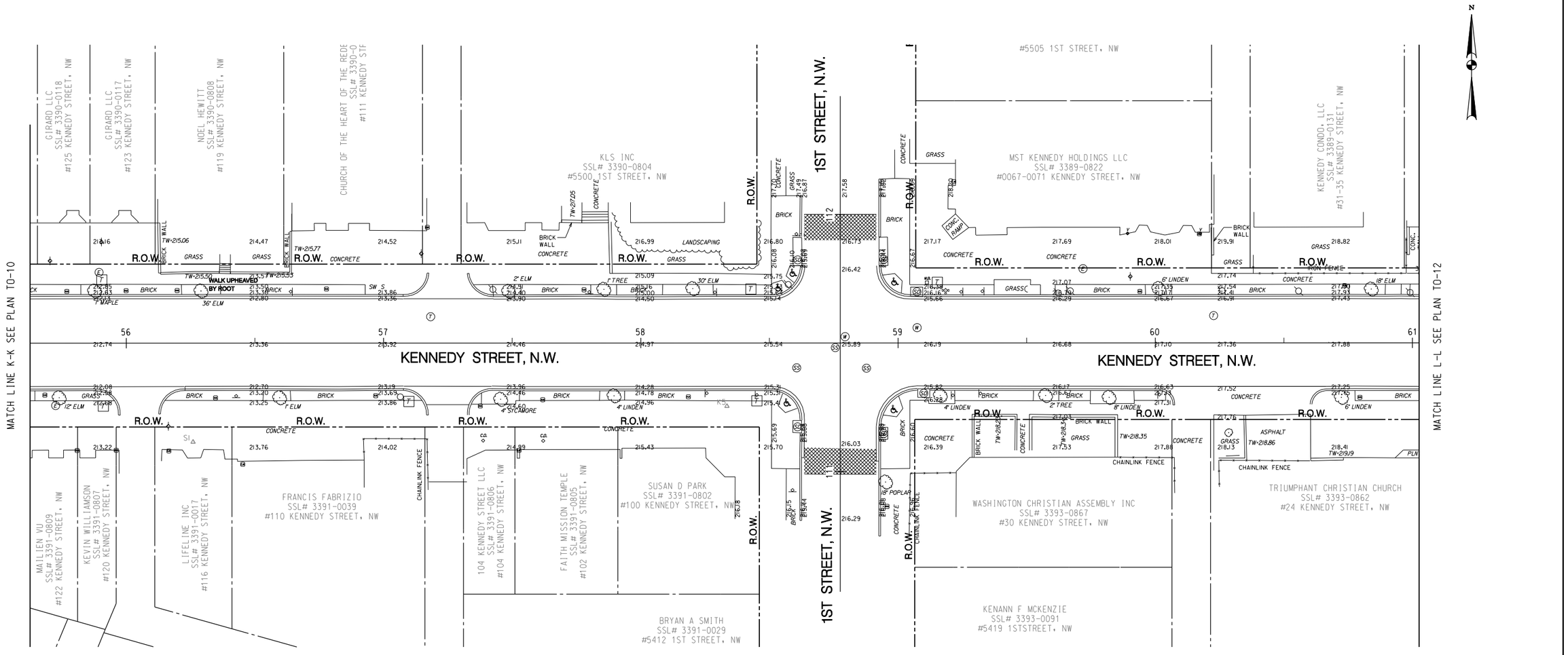

GRAPHIC SCALE

20 10 0 20 40

1" = 20'-0" HORIZ.

Precision Systems, Inc.
Engineers, Planners and Architects
WASHINGTON, D.C.

NO.	DESCRIPTION	NAME	DATE

REVISIONS

TO-11

D.C. DEPARTMENT OF TRANSPORTATION
INFRASTRUCTURE PROJECT MANAGEMENT ADMINISTRATION
PROJECT MANAGEMENT DIVISION

KENNEDY STEET, N.W. IMPROVEMENT
FROM GEORGIA AVENUE TO NORTH CAPITOL STREET

EXISTING CONDITIONS – 11

PROJECT ENG. WZ
DESIGNED BY AYY
CHECKED BY MYH
DRAWN BY WZ/YZ
PROJECT MGR. AYY

DIVISION CHIEF
DATE
FILE
SHEET 17 OF 173

p:\60570\civil\plans\pTO_POII_60570.dgn
Tuesday, July 28, 2015 AT 03:31 PM
$PENTBLS$
$PLTDRVS$

REG	STATE	PROJECT	SHEET NO.	TOTAL SHEETS
3	D.C.	FAP No. STP-8888(480)	18	173

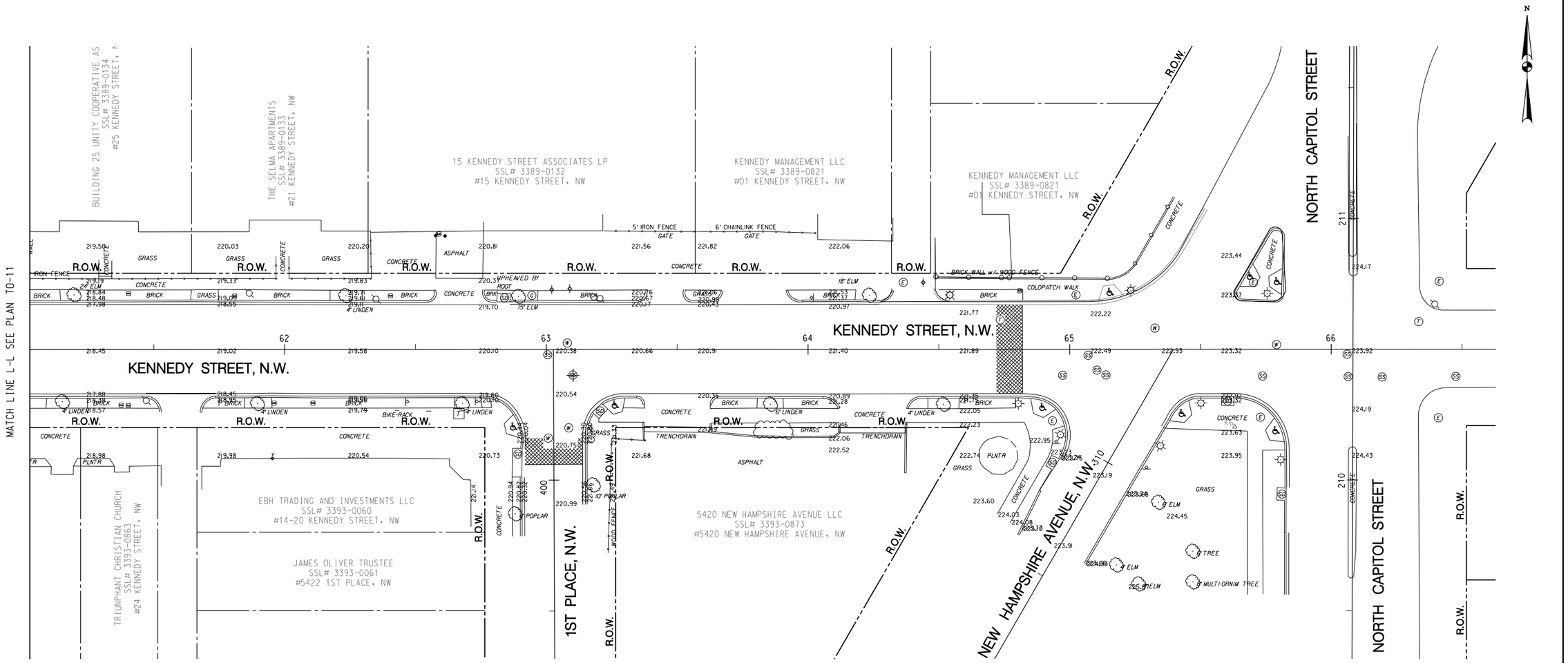

GRAPHIC SCALE

20 10 0 20 40

1" = 20'-0" HORIZ.

PSI

Precision Systems, Inc.

Engineers, Planners and Architects

WASHINGTON, D.C.

NO	DESCRIPTION	NAME	DATE

REVISIONS

TO-12

D.C. DEPARTMENT OF TRANSPORTATION
INFRASTRUCTURE PROJECT MANAGEMENT ADMINISTRATION
PROJECT MANAGEMENT DIVISION

KENNEDY STEET, N.W. IMPROVEMENT
FROM GEORGIA AVENUE TO NORTH CAPITOL STREET

PROJECT ENG. WZ
DESIGNED BY AYY
CHECKED BY MYH
DRAWN BY WZ/YZ
PROJECT MGR. AYY

EXISTING CONDITIONS – 12

DIVISION CHIEF
DATE
FILE
SHEET 18 OF 173

p:\60570\civil\plans\p10_P012_60570.dgn
Tuesday, July 28, 2015 AT 03:31 PM
$PENTBL$
$PLTDRV$

REG	STATE	PROJECT	SHEET NO.	TOTAL SHEETS
3	D.C.	FAP No. STP-8888(480)	19	173

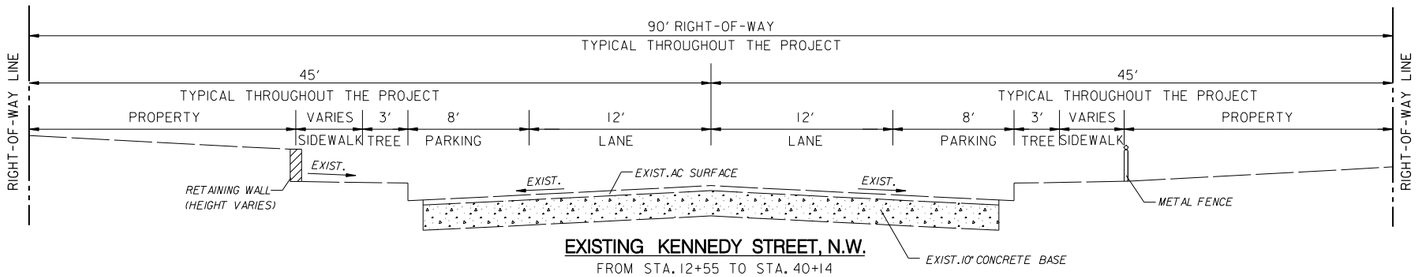

EXISTING KENNEDY STREET, N.W.

FROM STA. 12+55 TO STA. 40+14

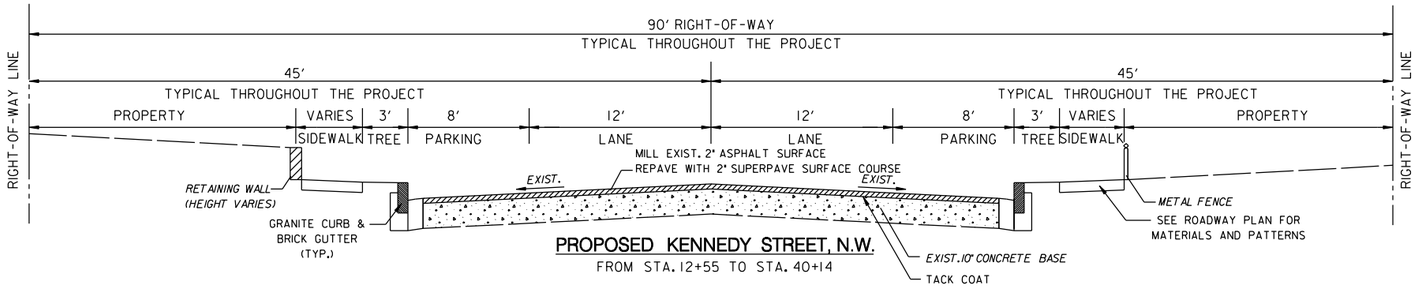

PROPOSED KENNEDY STREET, N.W.

FROM STA. 12+55 TO STA. 40+14

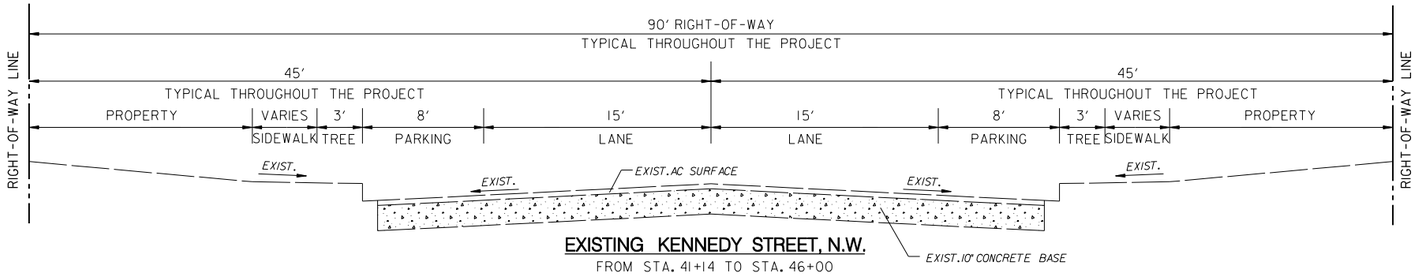

EXISTING KENNEDY STREET, N.W.

FROM STA. 41+14 TO STA. 46+00

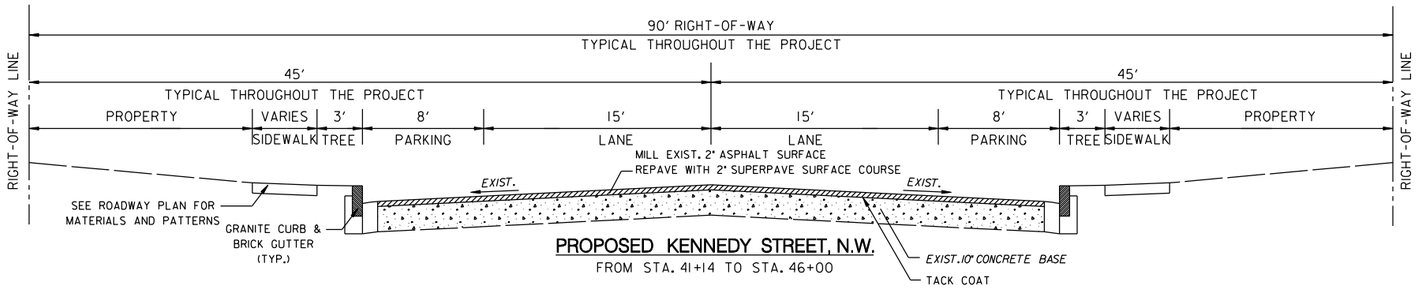

PROPOSED KENNEDY STREET, N.W.

FROM STA. 41+14 TO STA. 46+00

GRAPHIC SCALE

5 0 5 10

1" = 2.5'-0" VERTICAL
1" = 5'-0" HORIZONTAL

Precision Systems, Inc.
Engineers, Planners and Architects
WASHINGTON, D.C.

NO	DESCRIPTION	NAME	DATE

REVISIONS

HT-01

D.C. DEPARTMENT OF TRANSPORTATION
INFRASTRUCTURE PROJECT MANAGEMENT ADMINISTRATION
PROJECT MANAGEMENT DIVISION

KENNEDY STEET, N.W. IMPROVEMENT
FROM GEORGIA AVENUE TO NORTH CAPITOL STREET

PROJECT ENG. WZ
DESIGNED BY AYY
CHECKED BY MYH
DRAWN BY WZ/YZ
PROJECT MGR. AYY

TYPICAL SECTION – 1

DIVISION CHIEF
DATE
FILE
SHEET 19 OF 173

p:\60570\civil\plans\pHT_X001_60570.dgn
Tuesday, July 28, 2015 AT 03:32 PM
$PENTBLS$
$PLTDRVS$

REG	STATE	PROJECT	SHEET NO.	TOTAL SHEETS
3	D.C.	FAP No. STP-8888(480)	20	173

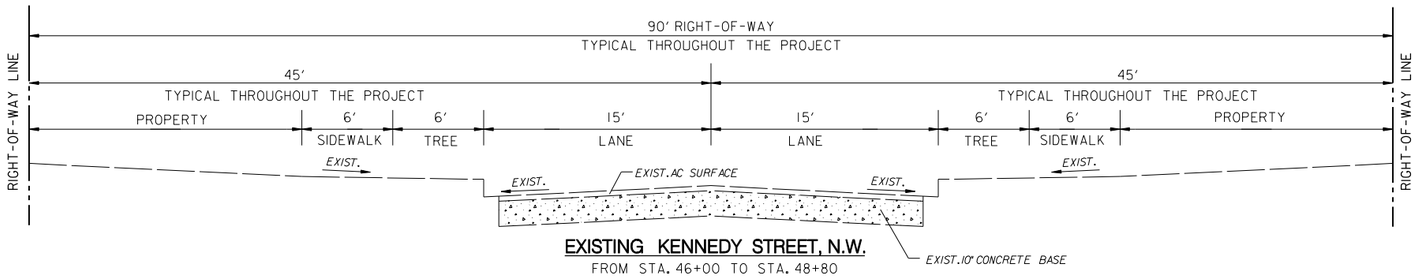

EXISTING KENNEDY STREET, N.W.

FROM STA. 46+00 TO STA. 48+80

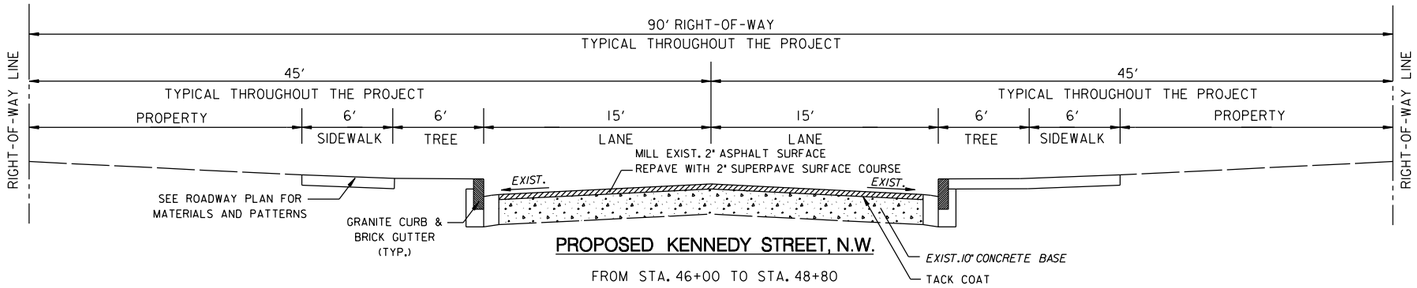

PROPOSED KENNEDY STREET, N.W.

FROM STA. 46+00 TO STA. 48+80

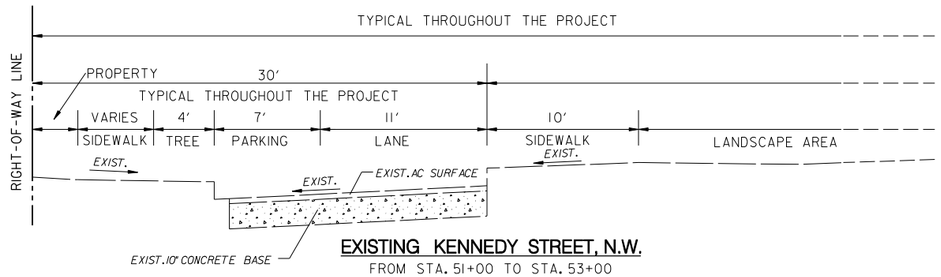

EXISTING KENNEDY STREET, N.W.

FROM STA. 51+00 TO STA. 53+00

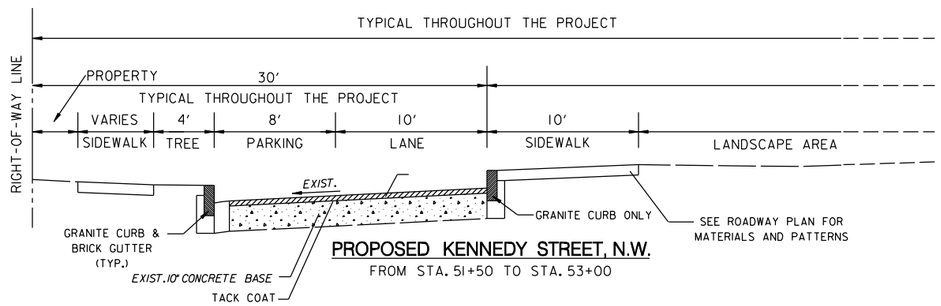

PROPOSED KENNEDY STREET, N.W.

FROM STA. 51+50 TO STA. 53+00

GRAPHIC SCALE

5 0 5 10

1" = 2.5'-0" VERTICAL
1" = 5'-0" HORIZONTAL

Precision Systems, Inc.
Engineers, Planners and Architects
WASHINGTON, D.C.

NO	DESCRIPTION	NAME	DATE

REVISIONS

HT-02

D.C. DEPARTMENT OF TRANSPORTATION
INFRASTRUCTURE PROJECT MANAGEMENT ADMINISTRATION
PROJECT MANAGEMENT DIVISION

KENNEDY STEET, N.W. IMPROVEMENT
FROM GEORGIA AVENUE TO NORTH CAPITOL STREET

PROJECT ENG. WZ
DESIGNED BY AYY
CHECKED BY MYH
DRAWN BY WZ/YZ
PROJECT MGR. AYY

TYPICAL SECTION – 2

DIVISION CHIEF
DATE
FILE
SHEET 20 OF 173

p:\60570\civil\plans\pHT_X002_60570.dgn
Tuesday, July 28, 2015 AT 03:33 PM
$PLTDRVS$
$PENTBLS$

REG	STATE	PROJECT	SHEET NO.	TOTAL SHEETS
3	D.C.	FAP No. STP-8888(480)	21	173

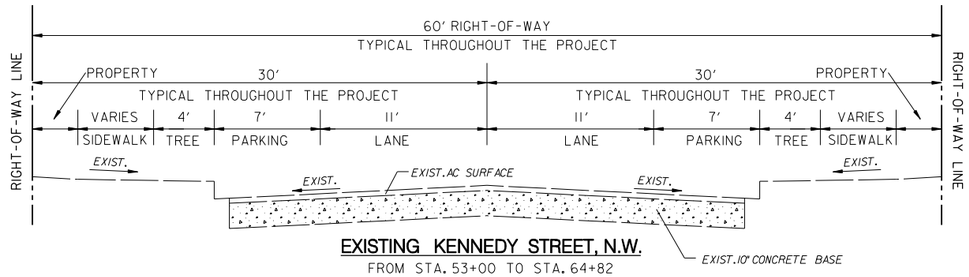

EXISTING KENNEDY STREET, N.W.

FROM STA. 53+00 TO STA. 64+82

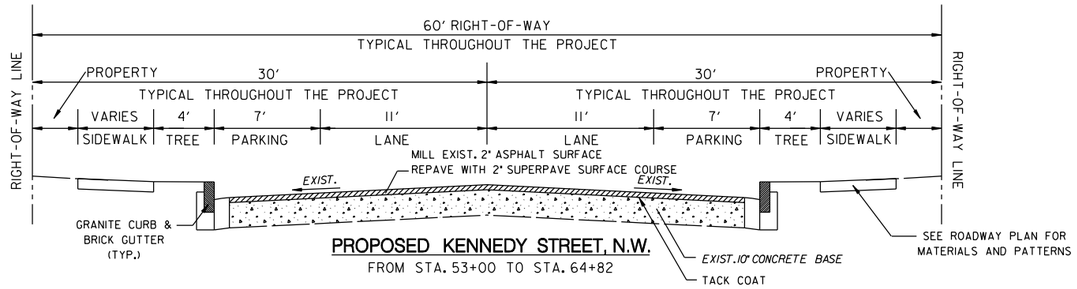

PROPOSED KENNEDY STREET, N.W.

FROM STA. 53+00 TO STA. 64+82

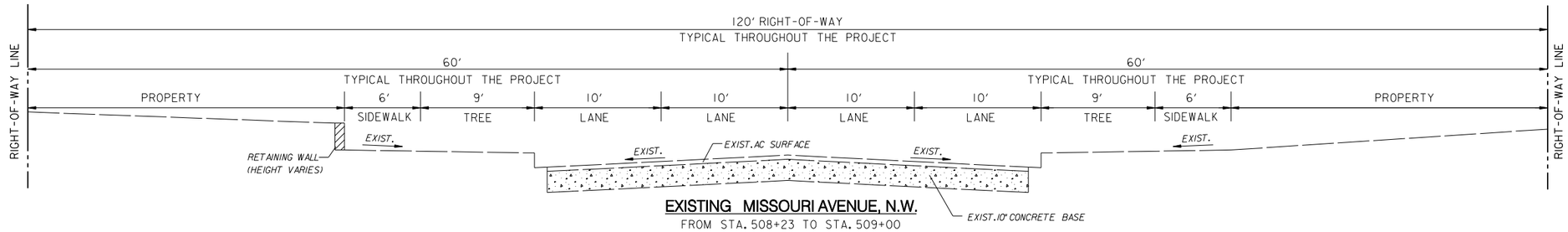

EXISTING MISSOURI AVENUE, N.W.

FROM STA. 508+23 TO STA. 509+00

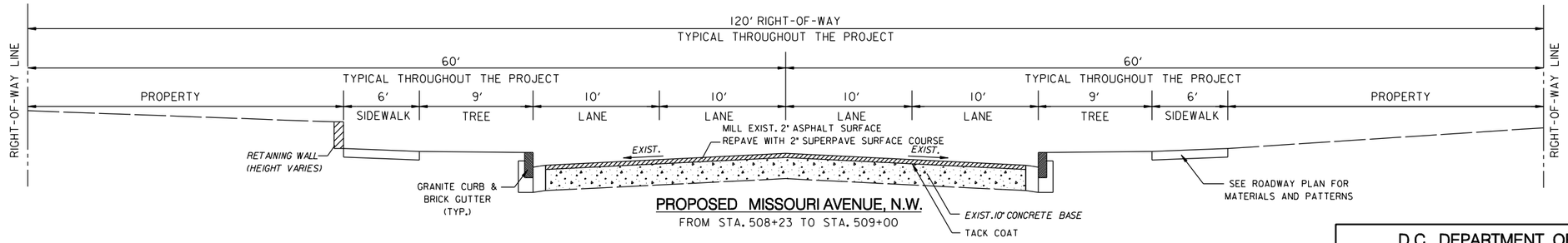

PROPOSED MISSOURI AVENUE, N.W.

FROM STA. 508+23 TO STA. 509+00

GRAPHIC SCALE

5 0 5 10

1" = 2.5'-0" VERTICAL
1" = 5'-0" HORIZONTAL

Precision Systems, Inc.
Engineers, Planners and Architects
WASHINGTON, D.C.

NO	DESCRIPTION	NAME	DATE

REVISIONS

HT-03

D.C. DEPARTMENT OF TRANSPORTATION
INFRASTRUCTURE PROJECT MANAGEMENT ADMINISTRATION
PROJECT MANAGEMENT DIVISION

KENNEDY STEET, N.W. IMPROVEMENT
FROM GEORGIA AVENUE TO NORTH CAPITOL STREET

PROJECT ENG. WZ
DESIGNED BY AYY
CHECKED BY MYH
DRAWN BY WZ/YZ
PROJECT MGR. AYY

DIVISION CHIEF
DATE
FILE
SHEET 21 OF 173

TYPICAL SECTION – 3

p:\60570\civil\plans\PHT_X003_60570.dgn
Tuesday, July 28, 2015 AT 03:33 PM
$PLTDRV$
$PENTBL$

REG	STATE	PROJECT	SHEET NO.	TOTAL SHEETS
3	D.C.	FAP No. STP-8888(480)	22	173

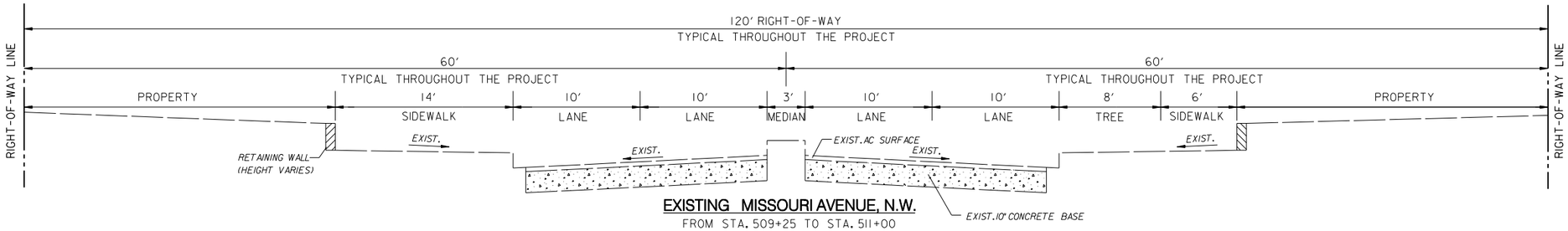

EXISTING MISSOURI AVENUE, N.W.

FROM STA. 509+25 TO STA. 511+00

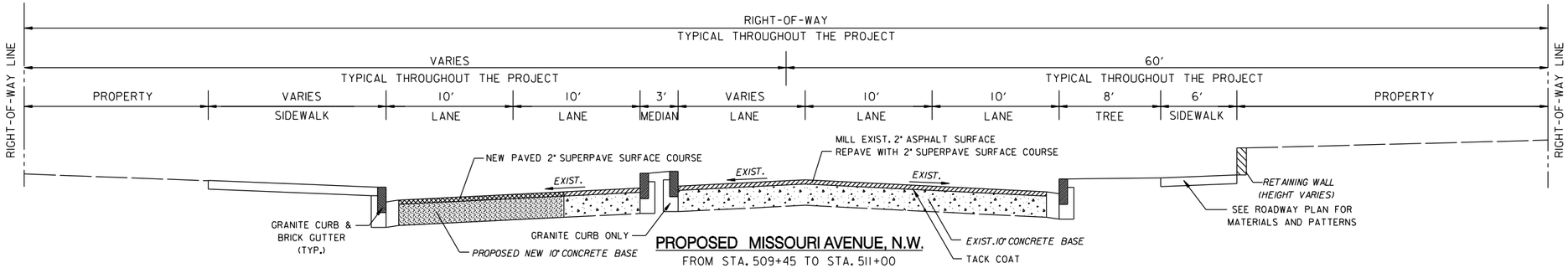

PROPOSED MISSOURI AVENUE, N.W.

FROM STA. 509+45 TO STA. 511+00

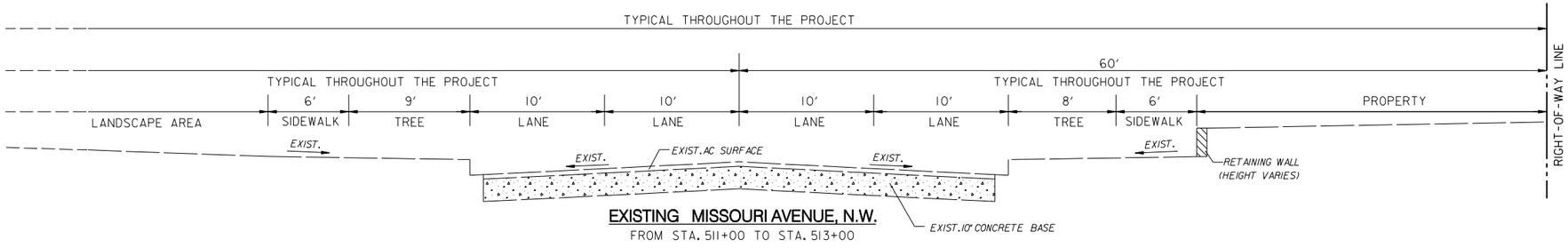

EXISTING MISSOURI AVENUE, N.W.

FROM STA. 511+00 TO STA. 513+00

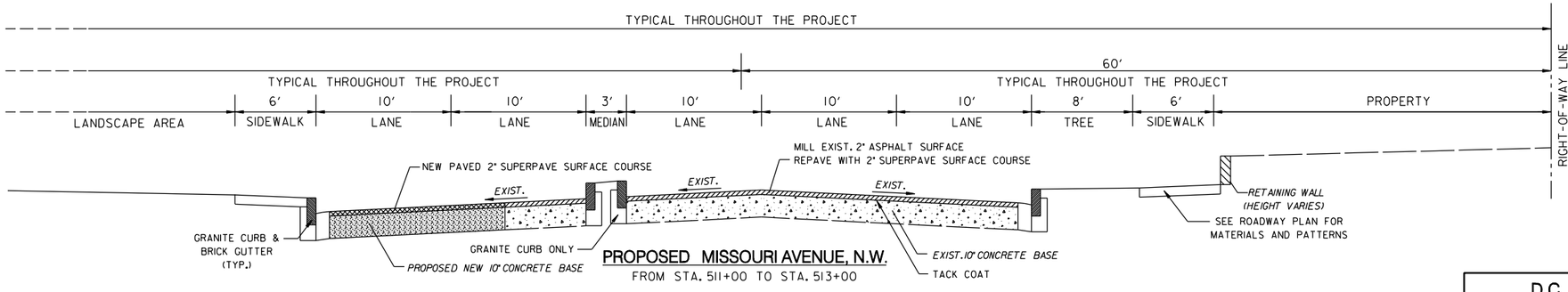

PROPOSED MISSOURI AVENUE, N.W.

FROM STA. 511+00 TO STA. 513+00

GRAPHIC SCALE

5 0 5 10

1" = 2.5'-0" VERTICAL
1" = 5'-0" HORIZONTAL

Precision Systems, Inc.
Engineers, Planners and Architects
WASHINGTON, D.C.

NO	DESCRIPTION	NAME	DATE

REVISIONS

HT-04

D.C. DEPARTMENT OF TRANSPORTATION
INFRASTRUCTURE PROJECT MANAGEMENT ADMINISTRATION
PROJECT MANAGEMENT DIVISION

KENNEDY STEET, N.W. IMPROVEMENT
FROM GEORGIA AVENUE TO NORTH CAPITOL STREET

TYPICAL SECTION – 4

PROJECT ENG. WZ
DESIGNED BY AYY
CHECKED BY MYH
DRAWN BY WZ/YZ
PROJECT MGR. AYY

DIVISION CHIEF
DATE
FILE
SHEET 22 OF 173

p:\60570\civil\plans\pHT_X004_60570.dgn
Tuesday, July 28, 2015 AT 03:34 PM
$PENTBLS$
$PLTDRVS$

REG	STATE	PROJECT	SHEET NO.	TOTAL SHEETS
3	D.C.	FAP No. STP-8888(480)	23	173

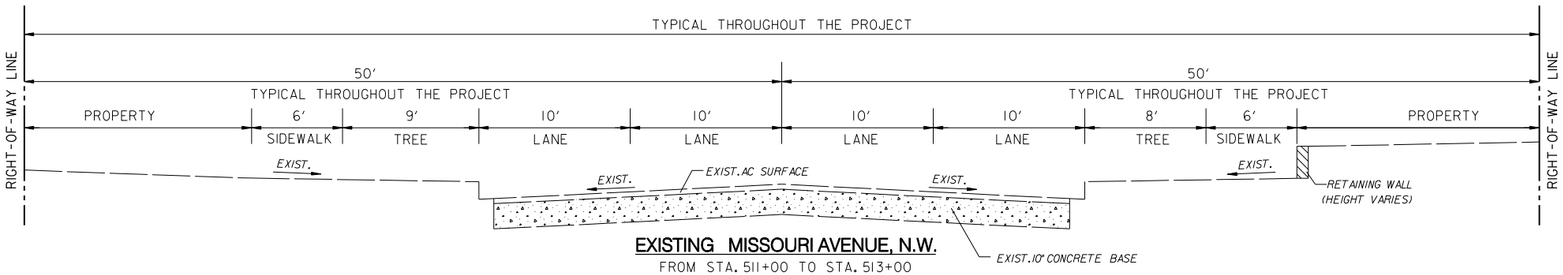

EXISTING MISSOURI AVENUE, N.W.

FROM STA. 511+00 TO STA. 513+00

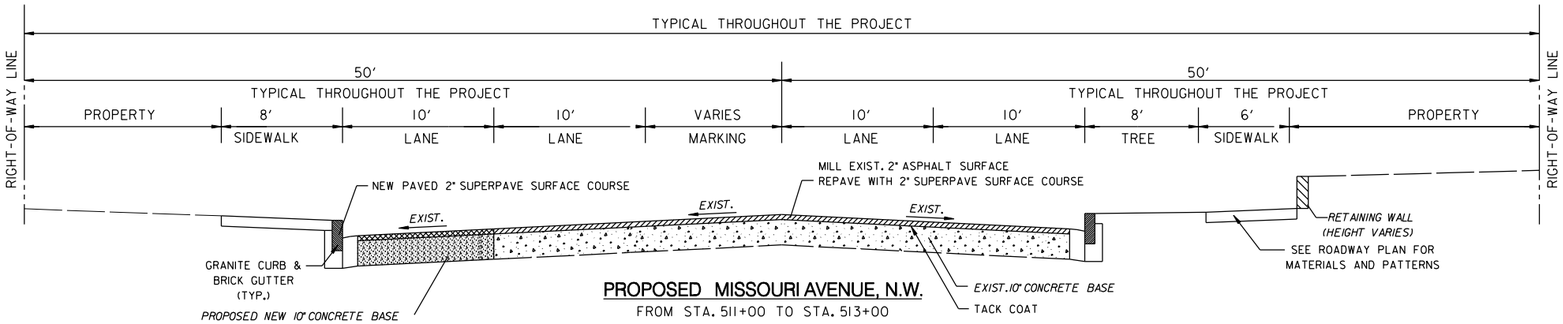

PROPOSED MISSOURI AVENUE, N.W.

FROM STA. 511+00 TO STA. 513+00

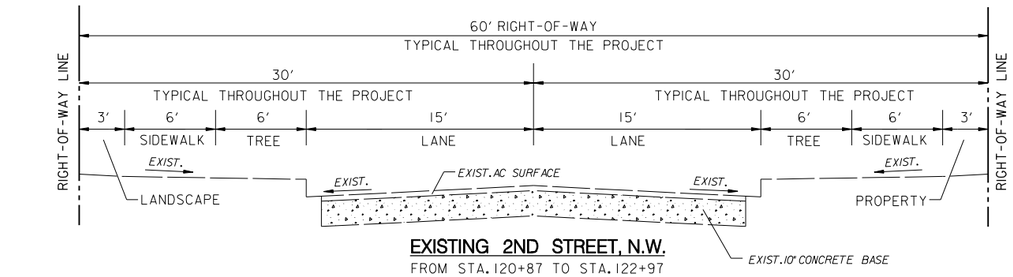

EXISTING 2ND STREET, N.W.

FROM STA. 120+87 TO STA. 122+97

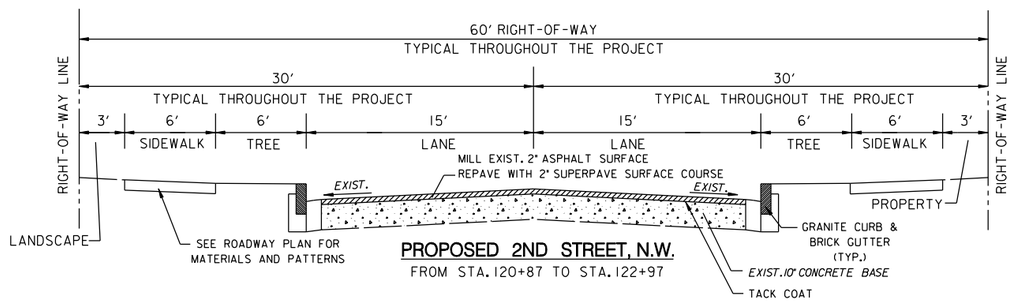

PROPOSED 2ND STREET, N.W.

FROM STA. 120+87 TO STA. 122+97

GRAPHIC SCALE

5 0 5 10

1" = 2.5'-0" VERTICAL
1" = 5'-0" HORIZONTAL

Precision Systems, Inc.
Engineers, Planners and Architects
WASHINGTON, D.C.

NO.	DESCRIPTION	NAME	DATE

REVISIONS

HT-05

D.C. DEPARTMENT OF TRANSPORTATION
INFRASTRUCTURE PROJECT MANAGEMENT ADMINISTRATION
PROJECT MANAGEMENT DIVISION

KENNEDY STEET, N.W. IMPROVEMENT
FROM GEORGIA AVENUE TO NORTH CAPITOL STREET

PROJECT ENG. WZ
DESIGNED BY AYY
CHECKED BY MYH
DRAWN BY WZ/YZ
PROJECT MGR. AYY

TYPICAL SECTION – 5

DIVISION CHIEF
DATE
FILE
SHEET 23 OF 173

p:\60570\civil\plans\PHT_X005_60570.dgn
Tuesday, July 28, 2015 AT 03:34 PM
$PLTDRVS$
$PENTBLS$

REG	STATE	PROJECT	SHEET NO.	TOTAL SHEETS
3	D.C.	FAP No. STP-8888(480)	24	173

GENERAL NOTES:

1. PLEASE REFER TO LANDSCAPE PLANS FOR SIDEWALK TREATMENT.

2. ALL PROPOSED CURB HEIGHT IS TO BE 6".

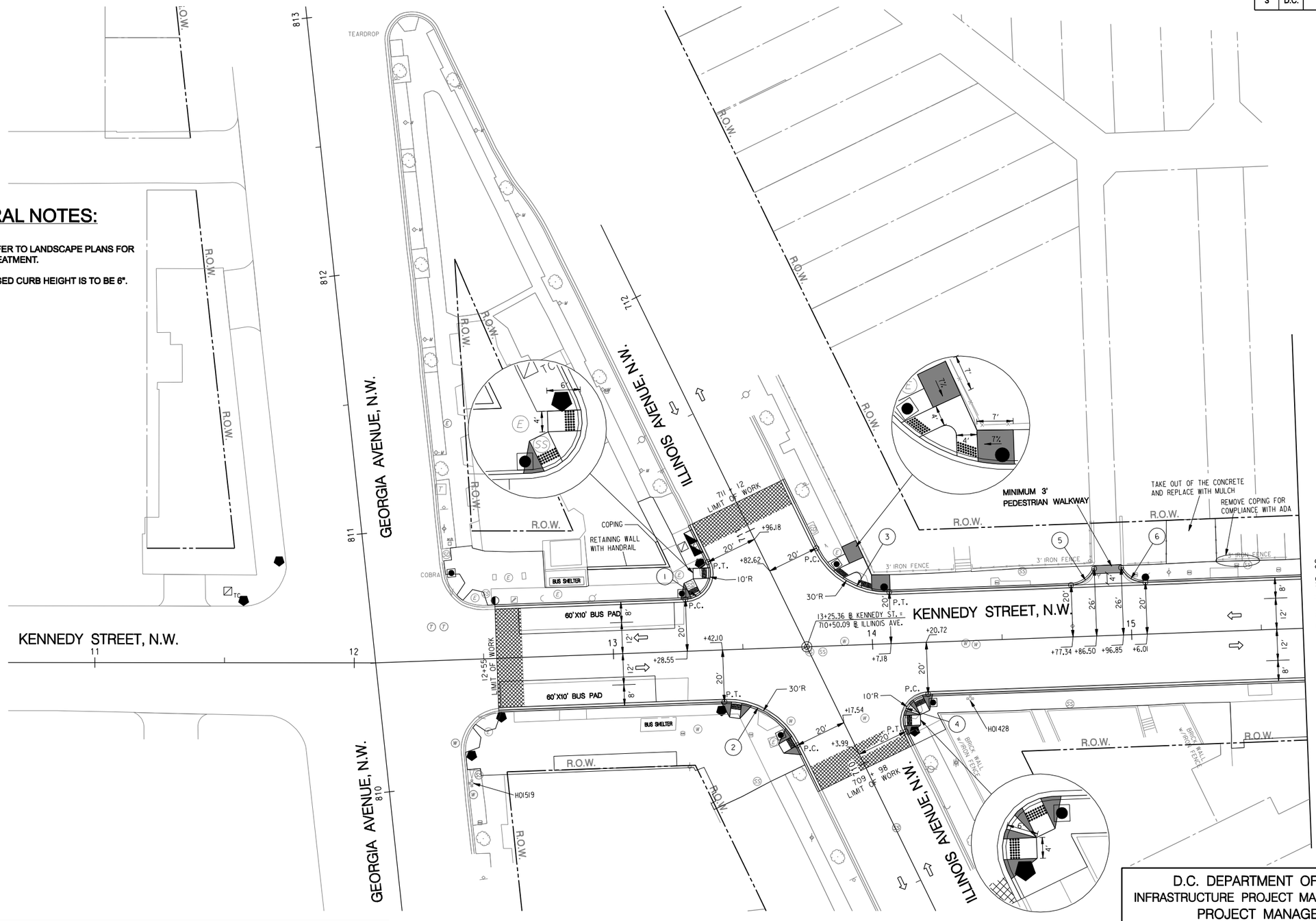

CURVE #	R	Δ	T	L	C	E
1	10.0	113°51' 32"	15.36	19.87	16.76	8.33
2	30.0	66°7' 3"	19.53	34.62	32.73	5.79
3	30.0	66°7' 3"	19.53	34.62	32.73	5.79
4	10.0	113°51' 32"	15.36	19.87	16.76	8.33
5	10.0	66°23' 28"	6.54	11.59	10.95	1.95
6	10.0	66°23' 28"	6.54	11.59	10.95	1.95

GRAPHIC SCALE

20 10 0 20 40

1" = 20'-0" HORIZ.

Precision Systems, Inc.
Engineers, Planners and Architects
WASHINGTON, D.C.

NO	DESCRIPTION	NAME	DATE

REVISIONS

HD-01

D.C. DEPARTMENT OF TRANSPORTATION
INFRASTRUCTURE PROJECT MANAGEMENT ADMINISTRATION
PROJECT MANAGEMENT DIVISION

KENNEDY STEET, N.W. IMPROVEMENT
FROM GEORGIA AVENUE TO NORTH CAPITOL STREET

PROJECT ENG. WZ
DESIGNED BY AYY
CHECKED BY MYH
DRAWN BY WZ/YZ
PROJECT MGR. AYY

PAVEMENT PLAN – 1

DIVISION CHIEF
DATE
FILE
SHEET 24 OF 173

p:\60570\civil\plans\pHD_P001_60570.dgn
Tuesday, July 28, 2015 AT 03:35 PM
$PENTBL$
$PLTDRV$

REG	STATE	PROJECT	SHEET NO.	TOTAL SHEETS
3	D.C.	FAP No. STP-8888(480)	25	173

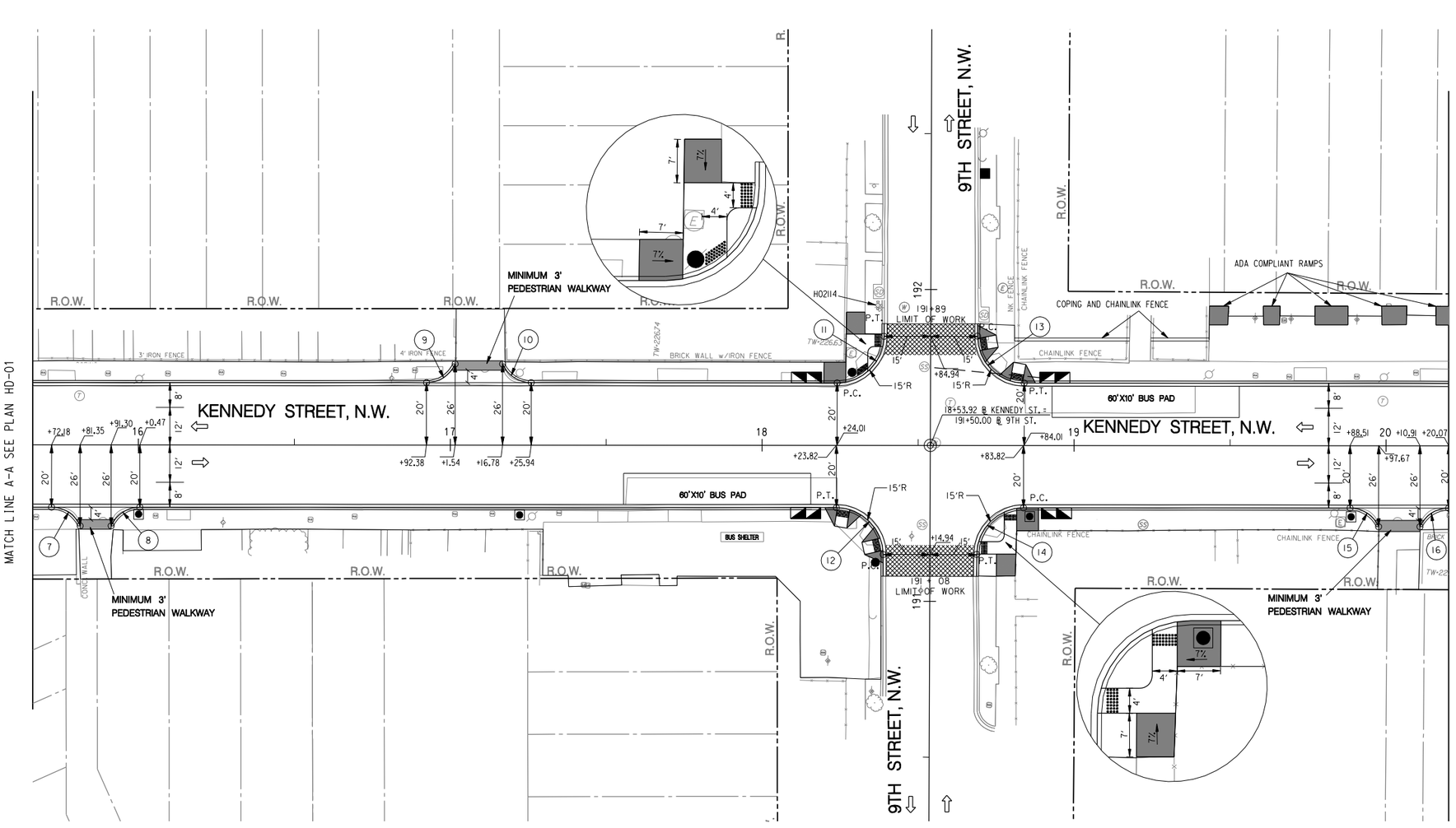

CURVE #	R	Δ	T	L	C	E
7	10.0	66°23' 28"	6.54	11.59	10.95	1.95
8	10.0	66°23' 28"	6.54	11.59	10.95	1.95
9	10.0	66°23' 28"	6.54	11.59	10.95	1.95
10	10.0	66°23' 28"	6.54	11.59	10.95	1.95
11	15.0	89°49' 14"	14.95	23.52	21.18	6.18
12	15.0	91°53' 20"	15.50	24.06	21.56	6.57
13	15.0	89°39' 32"	14.91	23.47	21.15	6.15
14	15.0	90°18' 25"	15.08	23.64	21.27	6.27
15	10.0	66°23' 28"	6.54	11.59	10.95	1.95
16	10.0	66°23' 28"	6.54	11.59	10.95	1.95

GRAPHIC SCALE
20 10 0 20 40
1" = 20'-0" HORIZ.

Precision Systems, Inc.
Engineers, Planners and Architects
WASHINGTON, D.C.

NO.	DESCRIPTION	NAME	DATE
	REVISIONS		

HD-02

D.C. DEPARTMENT OF TRANSPORTATION
INFRASTRUCTURE PROJECT MANAGEMENT ADMINISTRATION
PROJECT MANAGEMENT DIVISION

KENNEDY STEET, N.W. IMPROVEMENT
FROM GEORGIA AVENUE TO NORTH CAPITOL STREET

PROJECT ENG. WZ
DESIGNED BY AYY
CHECKED BY MYH
DRAWN BY WZ/YZ
PROJECT MGR. AYY

PAVEMENT PLAN – 2

DIVISION CHIEF
DATE
FILE
SHEET 25 OF 173

p:\60570\civil\plans\pHD_P002_60570.dgn
Tuesday, July 28, 2015 AT 03:35 PM
$PENTBLS$
$PLTDRVS$

REG	STATE	PROJECT	SHEET NO.	TOTAL SHEETS
3	D.C.	FAP No. STP-8888(480)	26	173

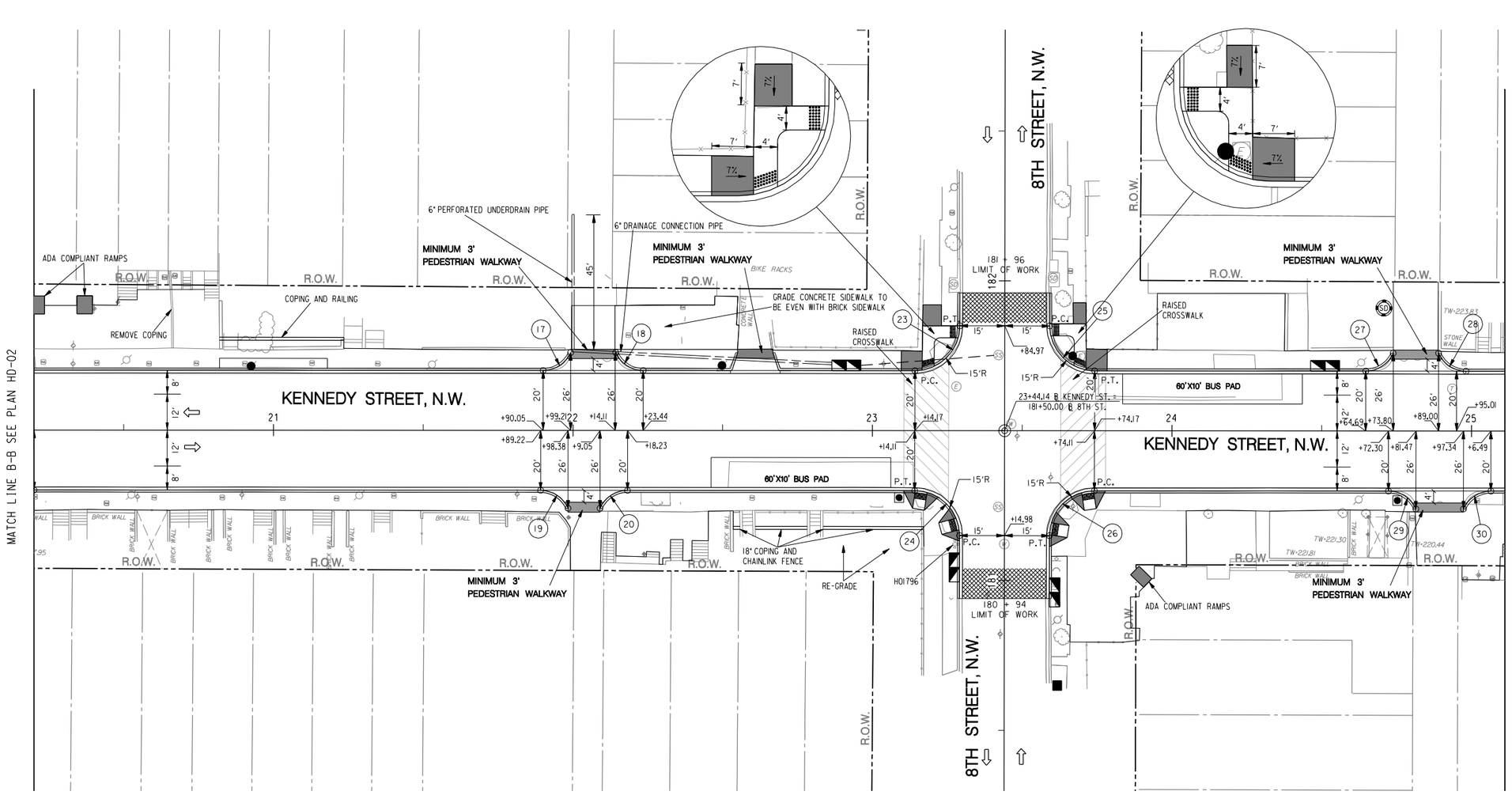

CURVE #	R	Δ	T	L	C	E
17	10.0	66°23' 28"	6.54	11.59	10.95	1.95
18	10.0	66°23' 28"	6.54	11.59	10.95	1.95
19	10.0	66°23' 28"	6.54	11.59	10.95	1.95
20	10.0	66°23' 28"	6.54	11.59	10.95	1.95
21	6.0	90°3' 49"	6.01	9.43	8.49	2.49
22	6.0	90°3' 49"	6.01	9.43	8.49	2.49
23	15.0	89°55' 43"	14.98	23.54	21.20	6.20
24	15.0	90°2' 12"	15.01	23.57	21.22	6.22
25	15.0	89°49' 14"	14.95	23.52	21.18	6.18
26	15.0	90°11' 56"	15.05	23.61	21.25	6.25
27	10.0	66°23' 28"	6.54	11.59	10.95	1.95
28	10.0	66°23' 28"	6.54	11.59	10.95	1.95
29	10.0	66°23' 28"	6.54	11.59	10.95	1.95
30	10.0	66°23' 28"	6.54	11.59	10.95	1.95

GRAPHIC SCALE

20 10 0 20 40

1" = 20'-0" HORIZ.

Precision Systems, Inc.
Engineers, Planners and Architects
WASHINGTON, D.C.

NO	DESCRIPTION	NAME	DATE

REVISIONS

HD-03

D.C. DEPARTMENT OF TRANSPORTATION
INFRASTRUCTURE PROJECT MANAGEMENT ADMINISTRATION
PROJECT MANAGEMENT DIVISION

KENNEDY STEET, N.W. IMPROVEMENT
FROM GEORGIA AVENUE TO NORTH CAPITOL STREET

PROJECT ENG. WZ
DESIGNED BY AYY
CHECKED BY MYH
DRAWN BY WZ/YZ
PROJECT MGR. AYY

PAVEMENT PLAN – 3

DIVISION CHIEF
DATE
FILE
SHEET 26 OF 173

p:\60570\civil\plans\pH0_P003_60570.dgn
Tuesday, July 28, 2015 AT 03:35 PM
$PLTDRVS$
$PENTBLS$

REG	STATE	PROJECT	SHEET NO.	TOTAL SHEETS
3	D.C.	FAP No. STP-8888(480)	27	173

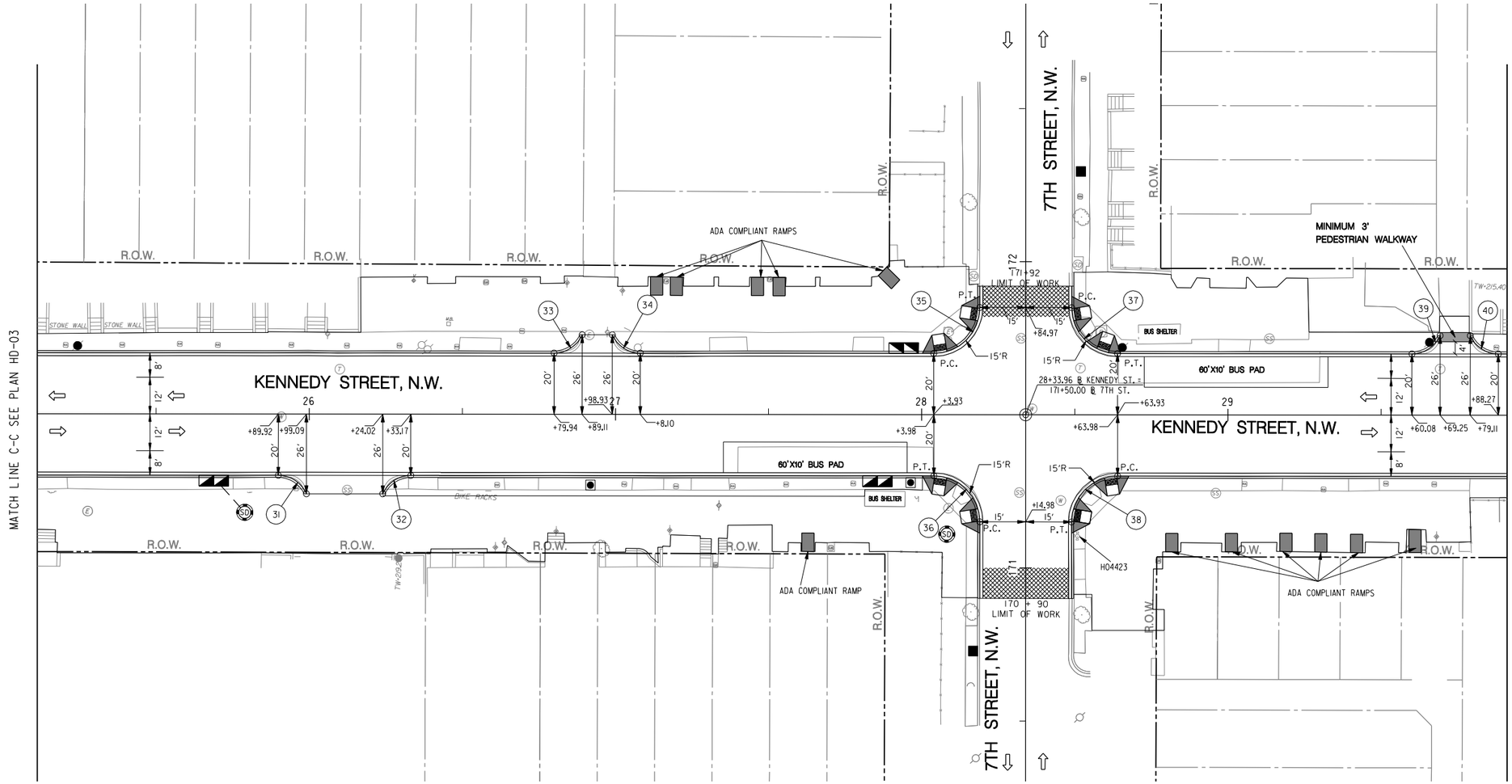

CURVE #	R	Δ	T	L	C	E
31	10.0	66°23' 28"	6.54	11.59	10.95	1.95
32	10.0	66°23' 28"	6.54	11.59	10.95	1.95
33	10.0	66°23' 28"	6.54	11.59	10.95	1.95
34	10.0	66°23' 28"	6.54	11.59	10.95	1.95
35	15.0	90°5' 26"	15.02	23.59	21.23	6.23
36	15.0	89°55' 43"	14.98	23.54	21.20	6.20
37	15.0	89°55' 43"	14.98	23.54	21.20	6.20
38	15.0	90°2' 12"	15.01	23.57	21.22	6.22
39	10.0	66°23' 28"	6.54	11.59	10.95	1.95
40	10.0	66°23' 28"	6.54	11.59	10.95	1.95

GRAPHIC SCALE
20 10 0 20 40
1" = 20'-0" HORIZ.

Precision Systems, Inc.
Engineers, Planners and Architects
WASHINGTON, D.C.

NO	DESCRIPTION	NAME	DATE
	REVISIONS		

HD-04

D.C. DEPARTMENT OF TRANSPORTATION
INFRASTRUCTURE PROJECT MANAGEMENT ADMINISTRATION
PROJECT MANAGEMENT DIVISION

KENNEDY STEET, N.W. IMPROVEMENT
FROM GEORGIA AVENUE TO NORTH CAPITOL STREET

PAVEMENT PLAN – 4

PROJECT ENG. WZ
DESIGNED BY AYY
CHECKED BY MYH
DRAWN BY WZ/YZ
PROJECT MGR. AYY

DIVISION CHIEF
DATE
FILE
SHEET 27 OF 173

p:\60570\civil\plans\pHD_P004_60570.dgn
Tuesday, July 28, 2015 AT 03:36 PM
$PENTBLS$
$PLTDRVS$

REG	STATE	PROJECT	SHEET NO.	TOTAL SHEETS
3	D.C.	FAP No. STP-8888(480)	28	173

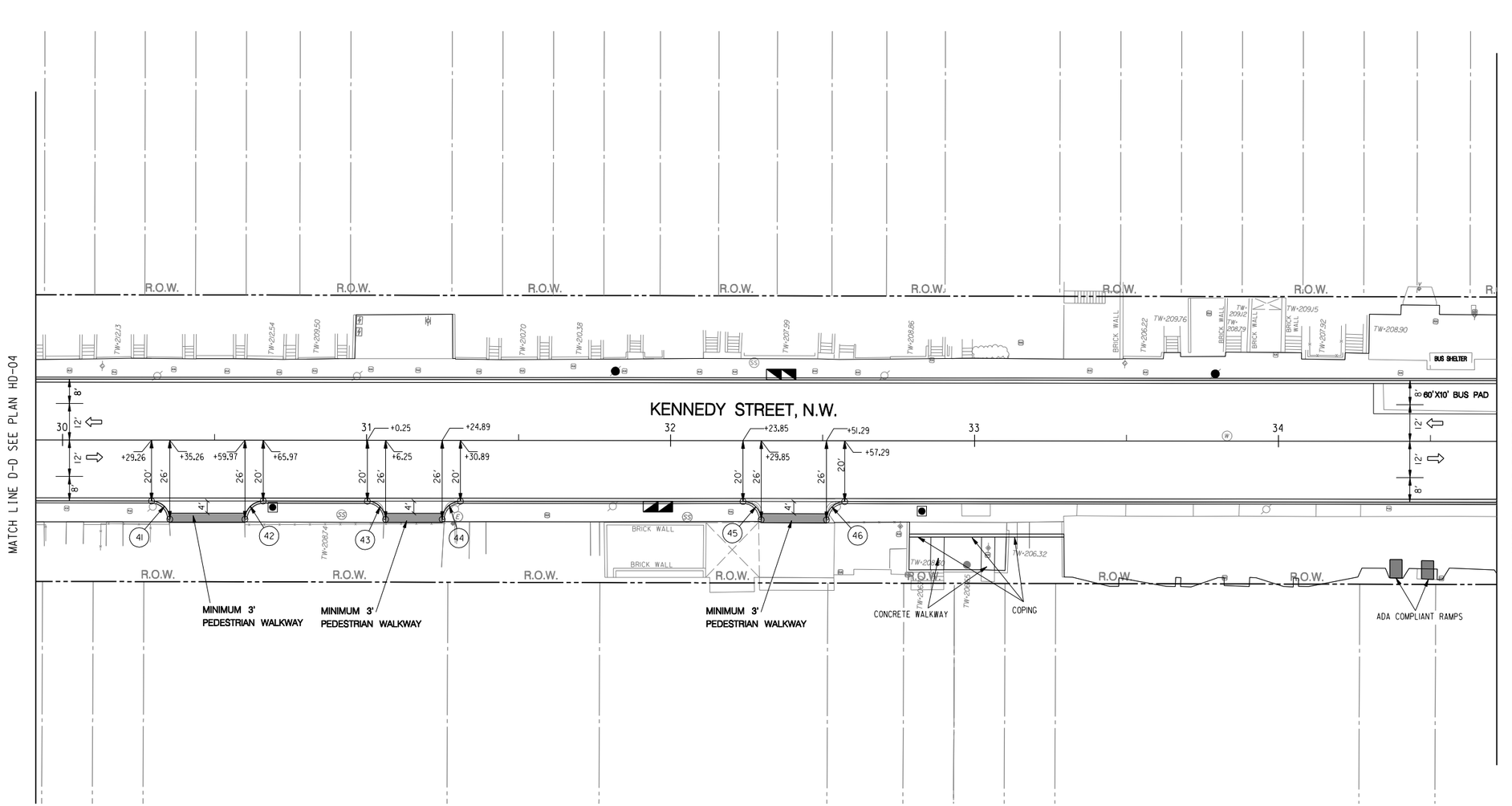

CURVE #	R	Δ	T	L	C	E
41	6.0	90°3' 49"	6.01	9.43	8.49	2.49
42	6.0	90°3' 49"	6.01	9.43	8.49	2.49
43	6.0	90°3' 49"	6.01	9.43	8.49	2.49
44	6.0	90°3' 49"	6.01	9.43	8.49	2.49
45	6.0	90°3' 49"	6.01	9.43	8.49	2.49
46	6.0	90°3' 49"	6.01	9.43	8.49	2.49

GRAPHIC SCALE
20 10 0 20 40
1" = 20'-0" HORIZ.

Precision Systems, Inc.
Engineers, Planners and Architects
WASHINGTON, D.C.

NO	DESCRIPTION	NAME	DATE

REVISIONS

HD-05

D.C. DEPARTMENT OF TRANSPORTATION
INFRASTRUCTURE PROJECT MANAGEMENT ADMINISTRATION
PROJECT MANAGEMENT DIVISION

KENNEDY STEET, N.W. IMPROVEMENT
FROM GEORGIA AVENUE TO NORTH CAPITOL STREET

PROJECT ENG. WZ
DESIGNED BY AYY
CHECKED BY MYH
DRAWN BY WZ/YZ
PROJECT MGR. AYY

PAVEMENT PLAN – 5

DIVISION CHIEF
DATE
FILE
SHEET 28 OF 173

p:\60570\civil\plans\pHD_P005_60570.dgn
Tuesday, July 28, 2015 AT 03:36 PM
$PENTBLS$
$PLTDRVS$

REG	STATE	PROJECT	SHEET NO.	TOTAL SHEETS
3	D.C.	FAP No. STP-8888(480)	29	173

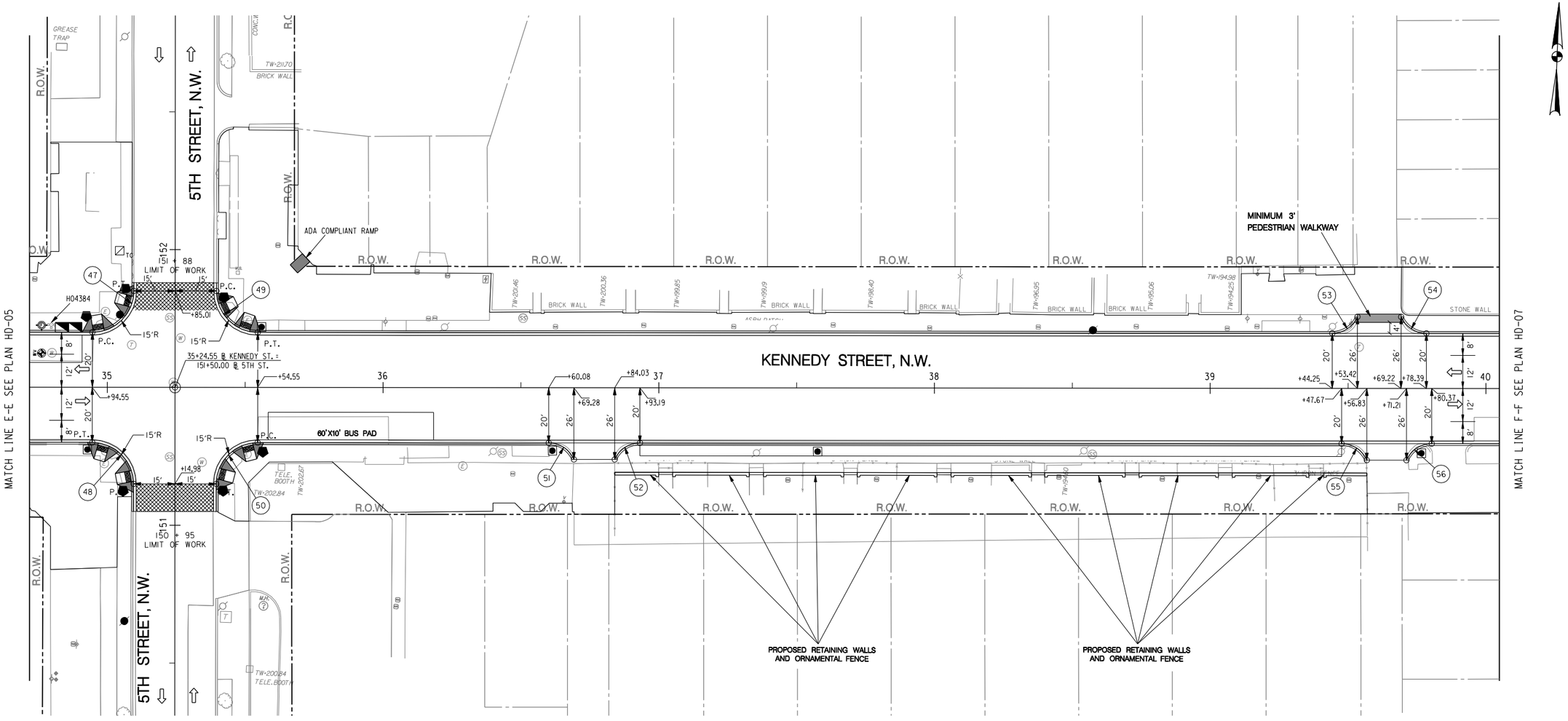

CURVE #	R	Δ	T	L	C	E
47	15.0	89°58' 57"	15.00	23.56	21.21	6.21
48	15.0	89°58' 57"	15.00	23.56	21.21	6.21
49	15.0	89°58' 57"	15.00	23.56	21.21	6.21
50	15.0	89°58' 57"	15.00	23.56	21.21	6.21
51	10.0	66°23' 28"	6.54	11.59	10.95	1.95
52	10.0	66°23' 28"	6.54	11.59	10.95	1.95
53	10.0	66°23' 28"	6.54	11.59	10.95	1.95
54	10.0	66°23' 28"	6.54	11.59	10.95	1.95
55	10.0	66°23' 28"	6.54	11.59	10.95	1.95
56	10.0	66°23' 28"	6.54	11.59	10.95	1.95

GRAPHIC SCALE
20 10 0 20 40
1" = 20'-0" HORIZ.

Precision Systems, Inc.
Engineers, Planners and Architects
WASHINGTON, D.C.

NO	DESCRIPTION	NAME	DATE

REVISIONS

HD-06

D.C. DEPARTMENT OF TRANSPORTATION
INFRASTRUCTURE PROJECT MANAGEMENT ADMINISTRATION
PROJECT MANAGEMENT DIVISION

KENNEDY STEET, N.W. IMPROVEMENT
FROM GEORGIA AVENUE TO NORTH CAPITOL STREET

PROJECT ENG. WZ
DESIGNED BY AYY
CHECKED BY MYH
DRAWN BY WZ/YZ
PROJECT MGR. AYY

PAVEMENT PLAN – 6

DIVISION CHIEF
DATE
FILE
SHEET 29 OF 173

p:\60570\civil\plans\pHD_P006_60570.dgn
Tuesday, July 28, 2015 AT 03:37 PM
$PENTBL$
$PLTDRV$

REG	STATE	PROJECT	SHEET NO.	TOTAL SHEETS
3	D.C.	FAP No. STP-8888(480)	30	173

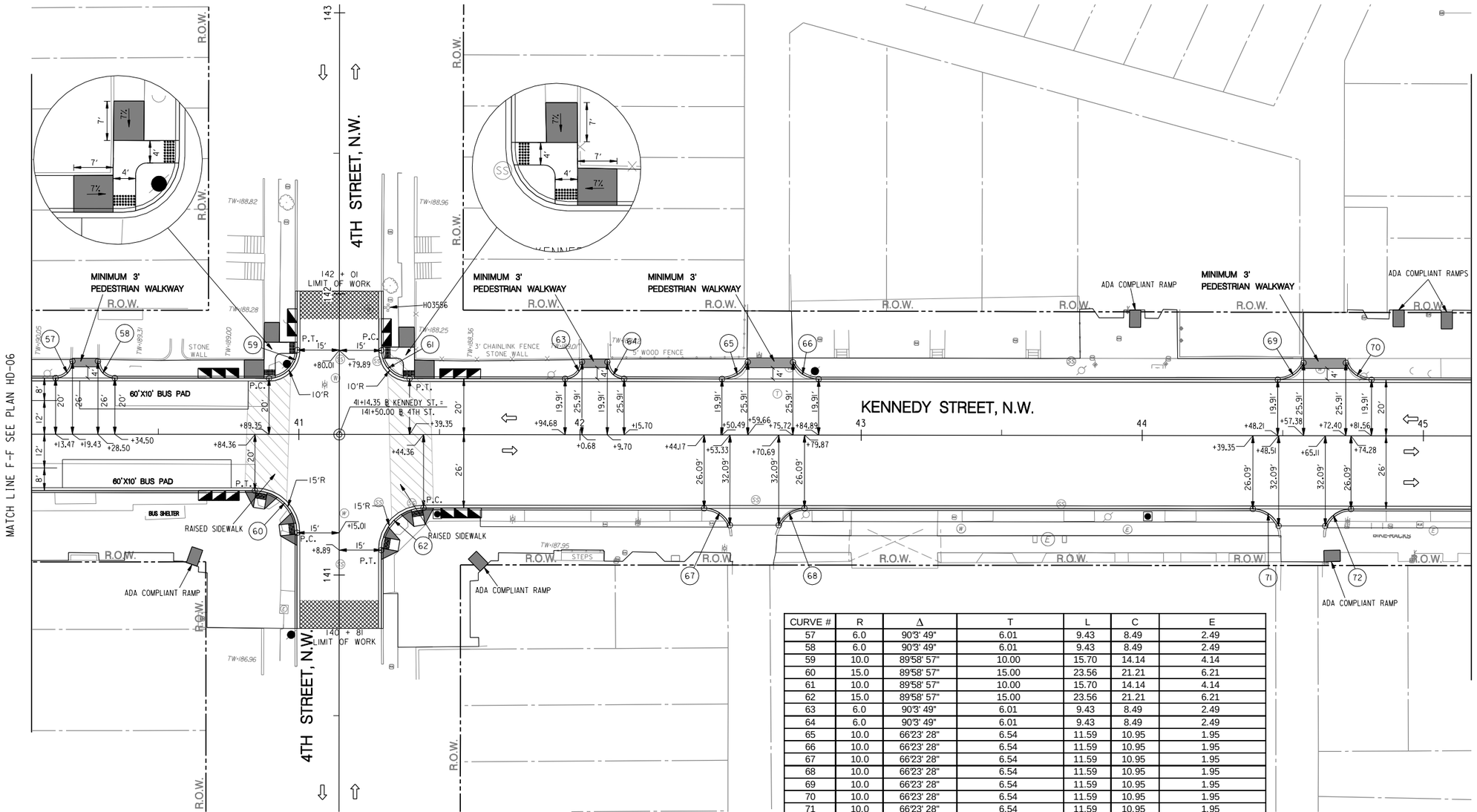

CURVE #	R	Δ	T	L	C	E
57	6.0	90°3' 49"	6.01	9.43	8.49	2.49
58	6.0	90°3' 49"	6.01	9.43	8.49	2.49
59	10.0	89°58' 57"	10.00	15.70	14.14	4.14
60	15.0	89°58' 57"	15.00	23.56	21.21	6.21
61	10.0	89°58' 57"	10.00	15.70	14.14	4.14
62	15.0	89°58' 57"	15.00	23.56	21.21	6.21
63	6.0	90°3' 49"	6.01	9.43	8.49	2.49
64	6.0	90°3' 49"	6.01	9.43	8.49	2.49
65	10.0	66°23' 28"	6.54	11.59	10.95	1.95
66	10.0	66°23' 28"	6.54	11.59	10.95	1.95
67	10.0	66°23' 28"	6.54	11.59	10.95	1.95
68	10.0	66°23' 28"	6.54	11.59	10.95	1.95
69	10.0	66°23' 28"	6.54	11.59	10.95	1.95
70	10.0	66°23' 28"	6.54	11.59	10.95	1.95
71	10.0	66°23' 28"	6.54	11.59	10.95	1.95
72	10.0	66°23' 28"	6.54	11.59	10.95	1.95

GRAPHIC SCALE
20 10 0 20 40
1" = 20'-0" HORIZ.

Precision Systems, Inc.
Engineers, Planners and Architects
WASHINGTON, D.C.

NO.	DESCRIPTION	NAME	DATE

REVISIONS

HD-07

D.C. DEPARTMENT OF TRANSPORTATION
INFRASTRUCTURE PROJECT MANAGEMENT ADMINISTRATION
PROJECT MANAGEMENT DIVISION

KENNEDY STEET, N.W. IMPROVEMENT
FROM GEORGIA AVENUE TO NORTH CAPITOL STREET

PROJECT ENG. WZ
DESIGNED BY AYY
CHECKED BY MYH
DRAWN BY WZ/YZ
PROJECT MGR. AYY

PAVEMENT PLAN – 7

DIVISION CHIEF
DATE
FILE
SHEET 30 OF 173

p:\60570\civil\plans\phD_P007_60570.dgn
Tuesday, July 28, 2015 AT 03:37 PM
$PENTBLS$
$PLTDRVS$

REG	STATE	PROJECT	SHEET NO.	TOTAL SHEETS
3	D.C.	FAP No. STP-8888(480)	31	173

CURVE #	R	Δ	T	L	C	E
73	40.0	90°8' 41"	40.10	62.93	56.64	16.64
74	15.0	101°11' 16"	18.26	26.49	23.18	8.63
75	15.0	87°34' 38"	14.38	22.93	20.76	5.78
76	15.0	89°33' 5"	14.88	23.44	21.13	6.13
77	6.0	89°55' 43"	5.99	9.42	8.48	2.48
78	6.0	89°55' 43"	5.99	9.42	8.48	2.48
79	10.0	66°23' 28"	6.54	11.59	10.95	1.95
80	10.0	66°23' 28"	6.54	11.59	10.95	1.95
81	6.0	89°55' 43"	5.99	9.42	8.48	2.48
82	6.0	89°55' 43"	5.99	9.42	8.48	2.48
83	10.0	122°12' 30"	18.12	21.33	17.51	10.69
84	15.0	155°11' 49"	68.22	40.63	29.30	54.85
85	20.0	82°31' 24"	17.55	28.81	26.38	6.61
86	2.0	180°0' 0"		6.28	4.00	
87	35.0	76°47' 57"	27.74	46.91	43.48	9.66
88	2.0	180°0' 0"		6.28	4.00	
89	15.0	97°24' 43"	17.08	25.50	22.54	7.73
90	100.0	18°53' 23"	16.64	32.97	32.82	1.37
91	70.0	7°38' 32"	4.68	9.34	9.33	0.16
92	50.0	7°16' 11"	3.18	6.34	6.34	0.10

Curve #		Center Line	Station	Distance	Direction
87	PC	Kennedy Street, N.W.	49+57.65	13.08	R
	PT	Kansas Avenue, N.W.	609+83.1	25.00	R
Curve #		Center Line	Station	Distance	Direction
88	PC	Missouri Avenue, N.W.	509+31.94	1.68	R
	PT	Missouri Avenue, N.W.	509+31.94	1.32	L
Curve #		Center Line	Station	Distance	Direction
90	PC	Kennedy Street, N.W.	50+11.01	16.21	R
	PT	Kennedy Street, N.W.	49+78.44	12.20	R
Curve #		Center Line	Station	Distance	Direction
91	PC	Missouri Avenue, N.W.	509+99.33	1.26	R
	PT	Missouri Avenue, N.W.	509+90.40	1.81	R
Curve #		Center Line	Station	Distance	Direction
92	PC	Missouri Avenue, N.W.	509+90.40	21.25	L
	PT	Missouri Avenue, N.W.	509+96.80	21.65	L

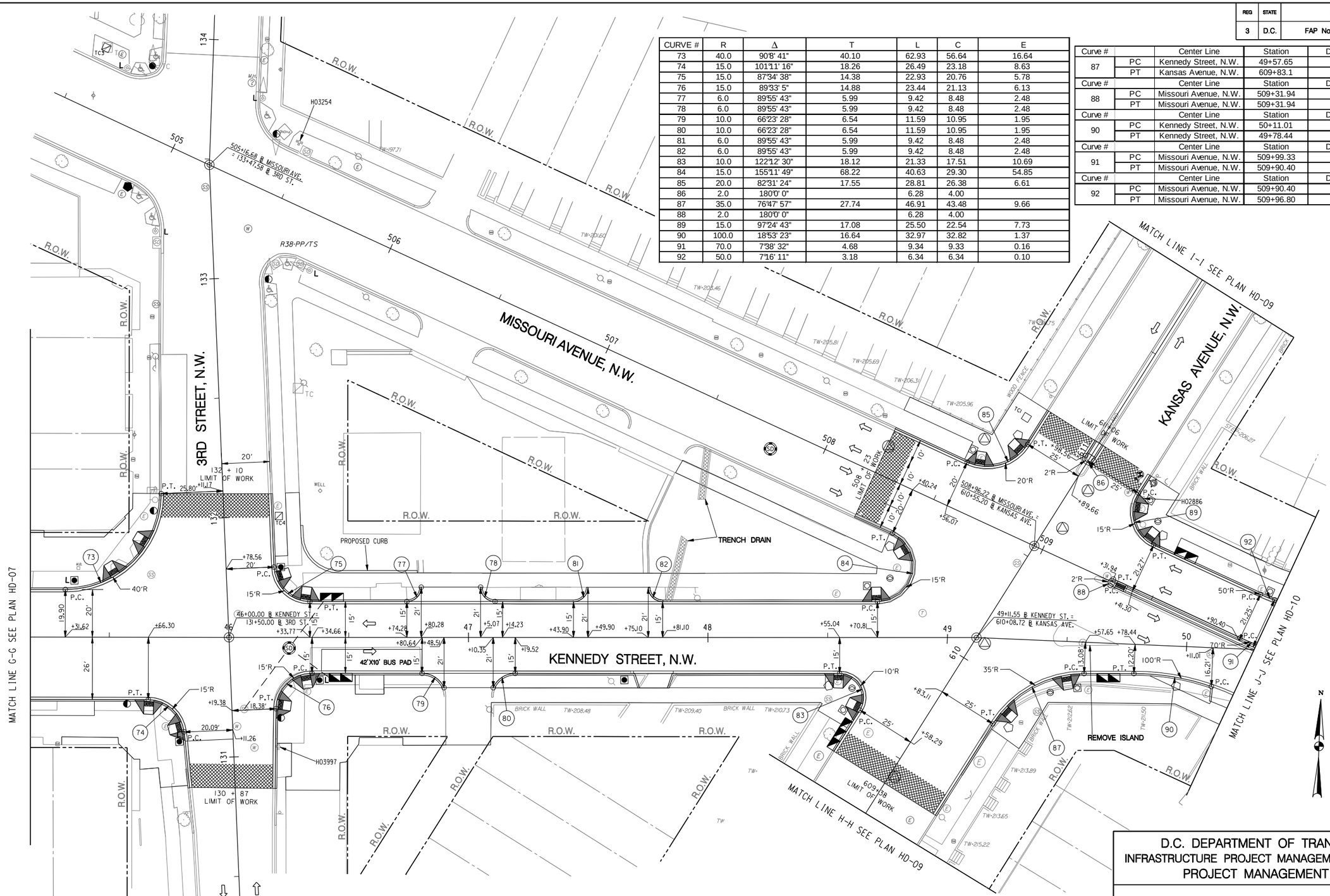

GRAPHIC SCALE

20 10 0 20 40

1" = 20'-0" HORIZ.

PSI
Precision Systems, Inc.
Engineers, Planners and Architects
WASHINGTON, D.C.

NO	DESCRIPTION	NAME	DATE
	REVISIONS		

HD-08

D.C. DEPARTMENT OF TRANSPORTATION
INFRASTRUCTURE PROJECT MANAGEMENT ADMINISTRATION
PROJECT MANAGEMENT DIVISION

KENNEDY STEET, N.W. IMPROVEMENT
FROM GEORGIA AVENUE TO NORTH CAPITOL STREET

PROJECT ENG. WZ
DESIGNED BY AYY
CHECKED BY MYH
DRAWN BY WZ/YZ
PROJECT MGR. AYY

PAVEMENT PLAN – 8

DIVISION CHIEF
DATE
FILE
SHEET 31 OF 173

p:\60570\civil\plans\pHD_P008_60570.dgn
Tuesday, July 28, 2015 AT 03:37 PM
$PENTBLS$
$PLTDRVS$

REG	STATE	PROJECT	SHEET NO.	TOTAL SHEETS
3	D.C.	FAP No. STP-8888(480)	32	173

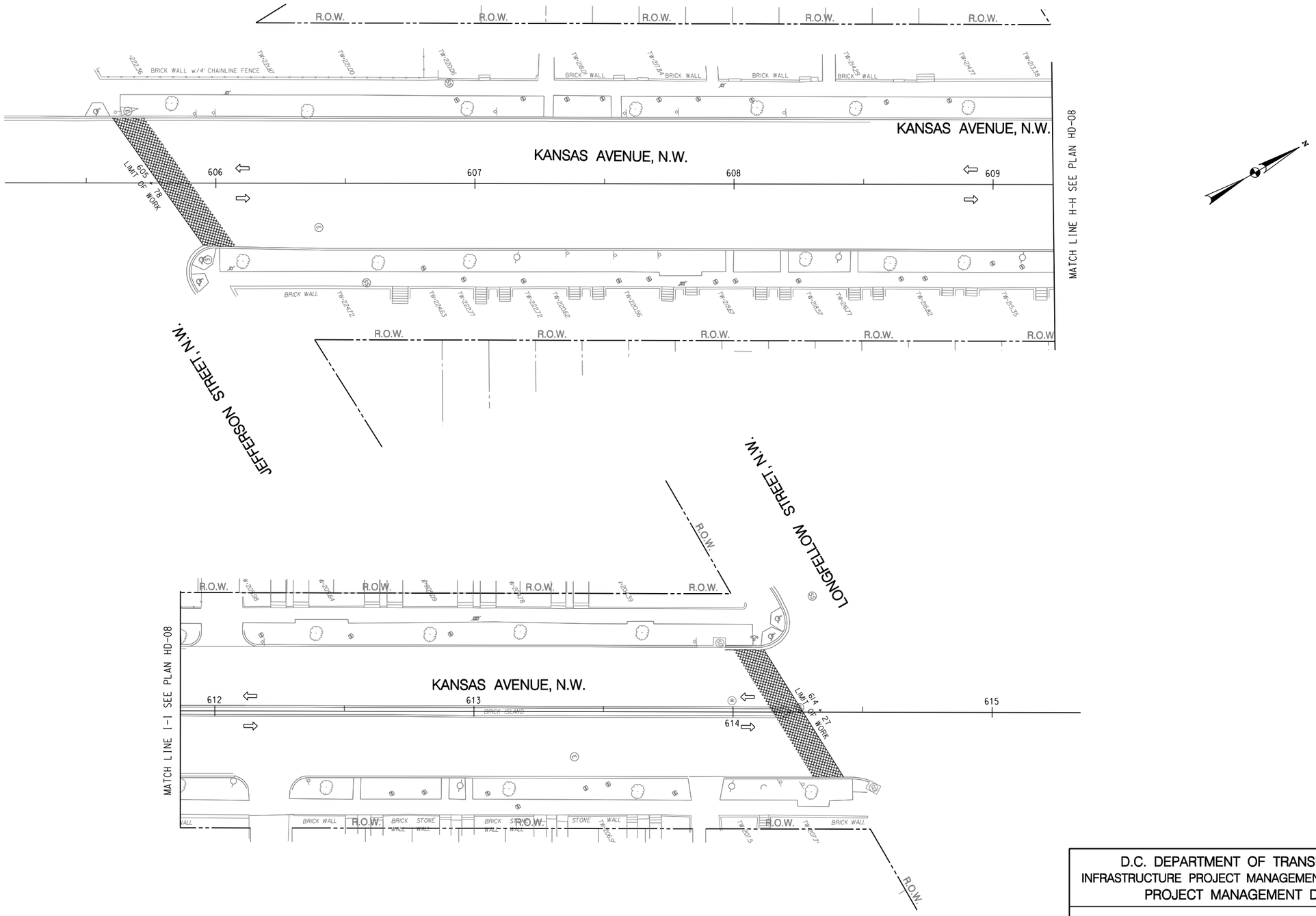

GRAPHIC SCALE

20 10 0 20 40

1" = 20'-0" HORIZ.

Precision Systems, Inc.
Engineers, Planners and Architects
WASHINGTON, D.C.

NO	DESCRIPTION	NAME	DATE

REVISIONS

HD-09

D.C. DEPARTMENT OF TRANSPORTATION
INFRASTRUCTURE PROJECT MANAGEMENT ADMINISTRATION
PROJECT MANAGEMENT DIVISION

KENNEDY STEET, N.W. IMPROVEMENT
FROM GEORGIA AVENUE TO NORTH CAPITOL STREET

PROJECT ENG. WZ
DESIGNED BY AYY
CHECKED BY MYH
DRAWN BY WZ/YZ
PROJECT MGR. AYY

PAVEMENT PLAN – 9

DIVISION CHIEF
DATE
FILE
SHEET 32 OF 173

p:\60570\civil\plans\pHD_P009_60570.dgn
Tuesday, July 28, 2015 AT 03:38 PM
$PENTBLS$
$PLTDRVS$

REG	STATE	PROJECT	SHEET NO.	TOTAL SHEETS
3	D.C.	FAP No. STP-8888(480)	33	173

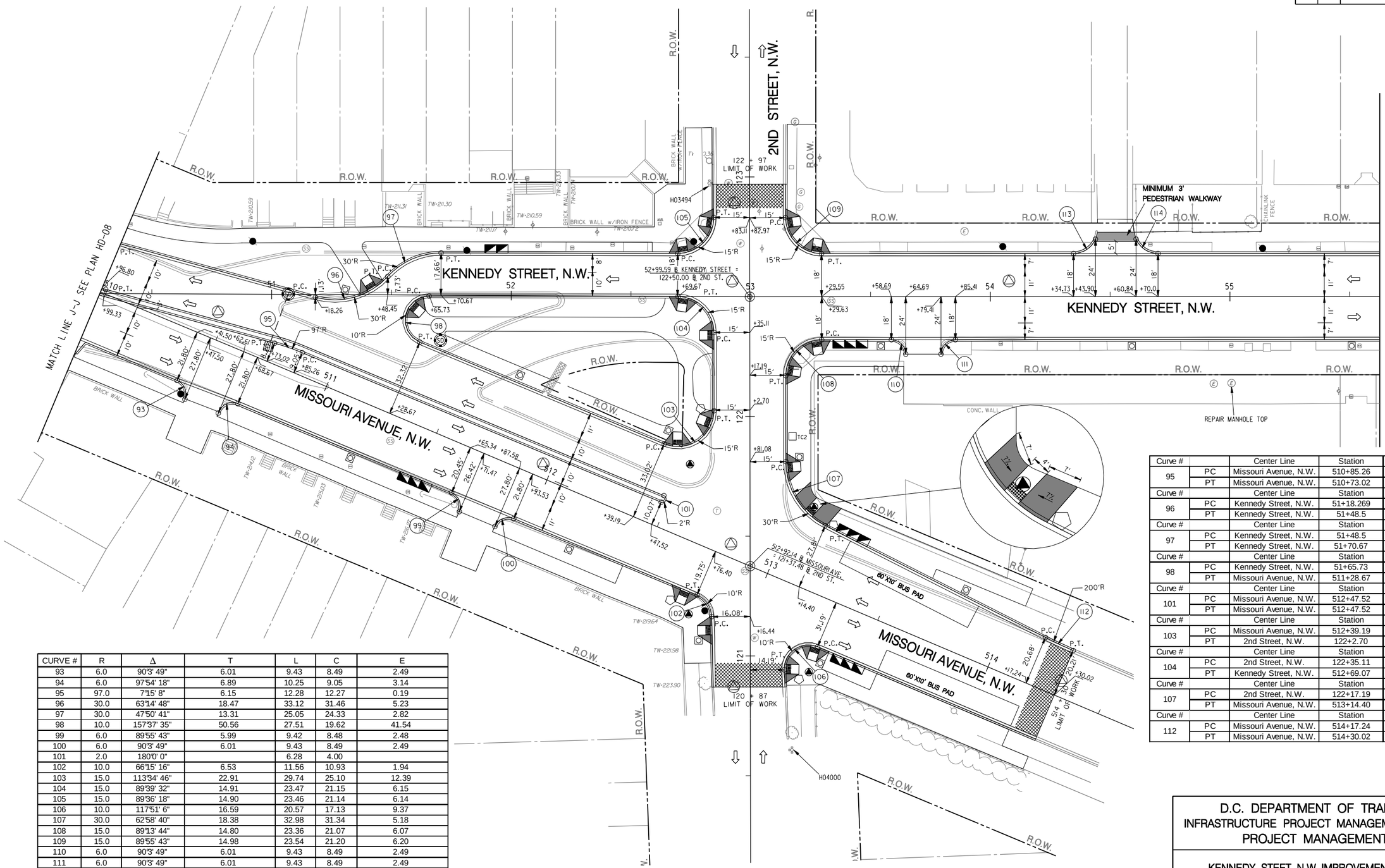

CURVE #	R	Δ	T	L	C	E
93	6.0	90°03' 49"	6.01	9.43	8.49	2.49
94	6.0	97°54' 18"	6.89	10.25	9.05	3.14
95	97.0	7°15' 8"	6.15	12.28	12.27	0.19
96	30.0	63°14' 48"	18.47	33.12	31.46	5.23
97	30.0	47°50' 41"	13.31	25.05	24.33	2.82
98	10.0	157°37' 35"	50.56	27.51	19.62	41.54
99	6.0	89°55' 43"	5.99	9.42	8.48	2.48
100	6.0	90°03' 49"	6.01	9.43	8.49	2.49
101	2.0	180°00' 00"		6.28	4.00	
102	10.0	66°15' 16"	6.53	11.56	10.93	1.94
103	15.0	113°34' 46"	22.91	29.74	25.10	12.39
104	15.0	89°39' 32"	14.91	23.47	21.15	6.15
105	15.0	89°36' 18"	14.90	23.46	21.14	6.14
106	10.0	117°51' 6"	16.59	20.57	17.13	9.37
107	30.0	62°58' 40"	18.38	32.98	31.34	5.18
108	15.0	89°13' 44"	14.80	23.36	21.07	6.07
109	15.0	89°55' 43"	14.98	23.54	21.20	6.20
110	6.0	90°03' 49"	6.01	9.43	8.49	2.49
111	6.0	90°03' 49"	6.01	9.43	8.49	2.49
112	200.0	3°39' 42"	6.39	12.78	12.78	0.10
113	10.0	66°2' 57"	6.50	11.53	10.90	1.93
114	10.0	66°23' 28"	6.54	11.59	10.95	1.95

Curve #		Center Line	Station	Distance	Direction
95	PC	Missouri Avenue, N.W.	510+85.26	9.05	R
	PT	Missouri Avenue, N.W.	510+73.02	8.20	R
Curve #		Center Line	Station	Distance	Direction
96	PC	Kennedy Street, N.W.	51+18.269	1.13	R
	PT	Kennedy Street, N.W.	51+48.5	7.73	L
Curve #		Center Line	Station	Distance	Direction
97	PC	Kennedy Street, N.W.	51+48.5	7.73	L
	PT	Kennedy Street, N.W.	51+70.67	17.66	L
Curve #		Center Line	Station	Distance	Direction
98	PC	Kennedy Street, N.W.	51+65.73	0.37	R
	PT	Missouri Avenue, N.W.	511+28.67	32.32	L
Curve #		Center Line	Station	Distance	Direction
101	PC	Missouri Avenue, N.W.	512+47.52	14.07	L
	PT	Missouri Avenue, N.W.	512+47.52	10.07	L
Curve #		Center Line	Station	Distance	Direction
103	PC	Missouri Avenue, N.W.	512+39.19	33.02	L
	PT	2nd Street, N.W.	122+2.70	15.00	L
Curve #		Center Line	Station	Distance	Direction
104	PC	2nd Street, N.W.	122+35.11	15.00	L
	PT	Kennedy Street, N.W.	512+69.07	18.00	L
Curve #		Center Line	Station	Distance	Direction
107	PC	2nd Street, N.W.	122+17.19	15.00	R
	PT	Missouri Avenue, N.W.	513+14.40	27.81	L
Curve #		Center Line	Station	Distance	Direction
112	PC	Missouri Avenue, N.W.	514+17.24	20.68	L
	PT	Missouri Avenue, N.W.	514+30.02	20.21	L

GRAPHIC SCALE
20 10 0 20 40
1" = 20'-0" HORIZ.

Precision Systems, Inc.
Engineers, Planners and Architects
WASHINGTON, D.C.

NO.	DESCRIPTION	NAME	DATE
	REVISIONS		

HD-10

D.C. DEPARTMENT OF TRANSPORTATION
INFRASTRUCTURE PROJECT MANAGEMENT ADMINISTRATION
PROJECT MANAGEMENT DIVISION

KENNEDY STEET, N.W. IMPROVEMENT
FROM GEORGIA AVENUE TO NORTH CAPITOL STREET

PAVEMENT PLAN – 10

PROJECT ENG. WZ
DESIGNED BY AYY
CHECKED BY MYH
DRAWN BY WZ/YZ
PROJECT MGR. AYY

DIVISION CHIEF
DATE
FILE
SHEET 33 OF 173

p:\60570\civil\plans\pHD_P010_60570.dgn
Tuesday, July 28, 2015 AT 03:38 PM
$PENTBLS$
$PLTDRYS$

REG	STATE	PROJECT	SHEET NO.	TOTAL SHEETS
3	D.C.	FAP No. STP-8888(480)	34	173

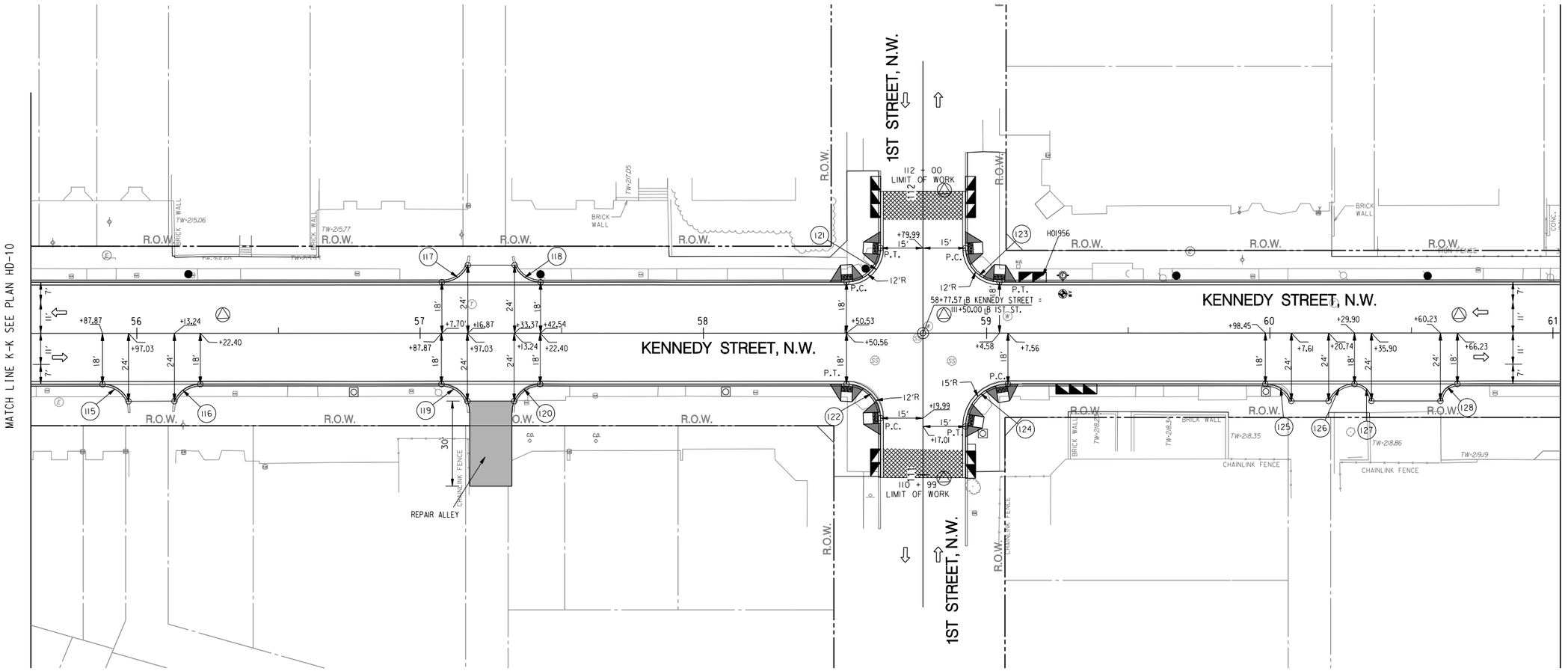

CURVE #	R	Δ	T	L	C	E
115	10.0	66°23' 28"	6.54	11.59	10.95	1.95
116	10.0	66°23' 28"	6.54	11.59	10.95	1.95
117	10.0	66°2' 57"	6.50	11.53	10.90	1.93
118	10.0	66°23' 28"	6.54	11.59	10.95	1.95
119	10.0	66°23' 28"	6.54	11.59	10.95	1.95
120	10.0	66°23' 28"	6.54	11.59	10.95	1.95
121	12.0	89°59' 46"	12.00	18.85	16.97	4.97
122	12.0	89°59' 46"	12.00	18.85	16.97	4.97
123	12.0	89°59' 46"	12.00	18.85	16.97	4.97
124	15.0	89°58' 57"	15.00	23.56	21.21	6.21
125	10.0	66°23' 28"	6.54	11.59	10.95	1.95
126	10.0	66°23' 28"	6.54	11.59	10.95	1.95
127	6.0	90°3' 49"	6.01	9.43	8.49	2.49
128	6.0	90°3' 49"	6.01	9.43	8.49	2.49

GRAPHIC SCALE
20 10 0 20 40
1" = 20'-0" HORIZ.

Precision Systems, Inc.
Engineers, Planners and Architects
WASHINGTON, D.C.

NO	DESCRIPTION	NAME	DATE
	REVISIONS		

HD-11

D.C. DEPARTMENT OF TRANSPORTATION
INFRASTRUCTURE PROJECT MANAGEMENT ADMINISTRATION
PROJECT MANAGEMENT DIVISION

KENNEDY STEET, N.W. IMPROVEMENT
FROM GEORGIA AVENUE TO NORTH CAPITOL STREET

PROJECT ENG. WZ
DESIGNED BY AYY
CHECKED BY MYH
DRAWN BY WZ/YZ
PROJECT MGR. AYY

PAVEMENT PLAN – 11

DIVISION CHIEF
DATE
FILE
SHEET 34 OF 173

p:\60570\civil\plans\ph0_P01l_60570.dgn
Tuesday, July 28, 2015 AT 03:39 PM
$PENTBLS$
$PLTDRVS$

REG	STATE	PROJECT	SHEET NO.	TOTAL SHEETS
3	D.C.	FAP No. STP-8888(480)	35	173

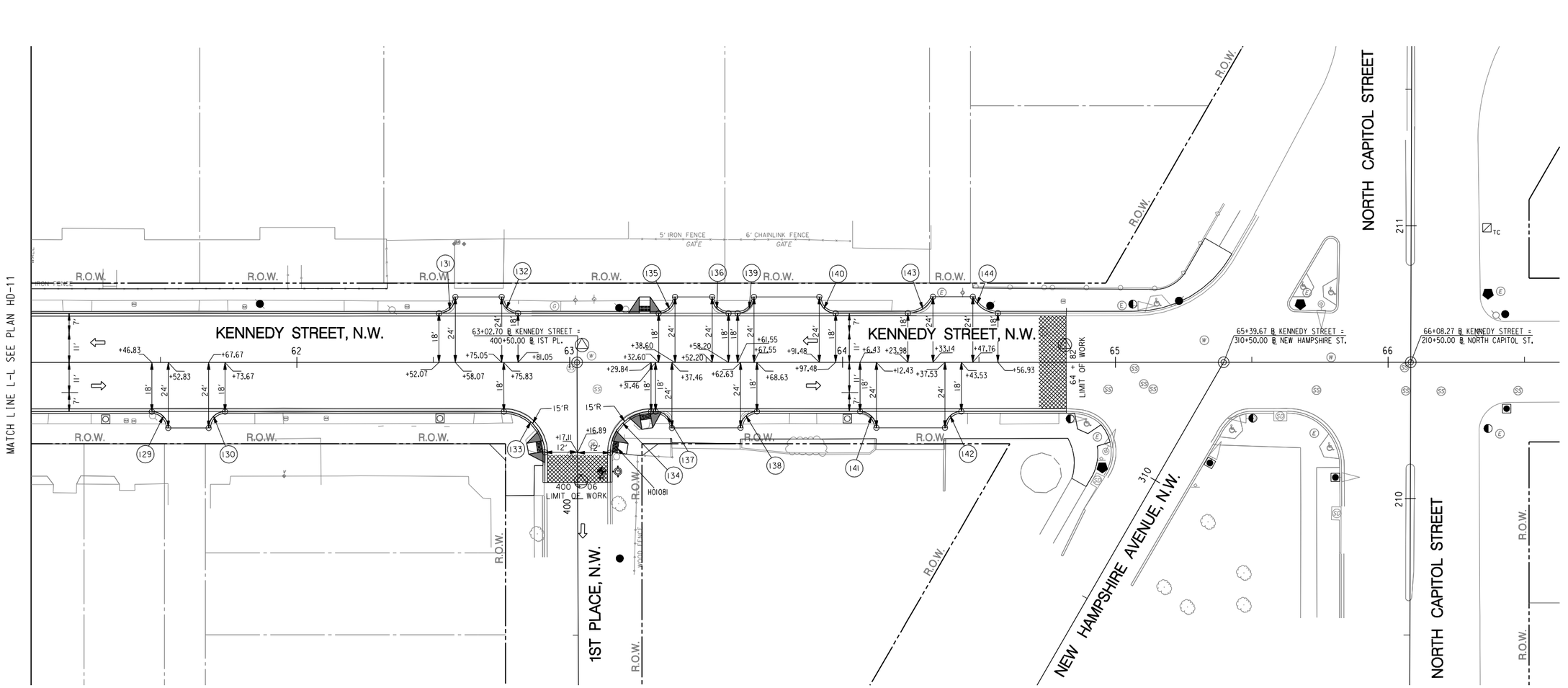

CURVE #	R	Δ	T	L	C	E
129	6.0	90°3' 49"	6.01	9.43	8.49	2.49
130	6.0	90°3' 49"	6.01	9.43	8.49	2.49
131	6.0	90°3' 49"	6.01	9.43	8.49	2.49
132	6.0	90°3' 49"	6.01	9.43	8.49	2.49
133	15.0	107°52' 0"	20.60	28.24	24.25	10.48
134	15.0	90°15' 11"	15.07	23.63	21.26	6.26
135	6.0	90°3' 49"	6.01	9.43	8.49	2.49
136	6.0	90°3' 49"	6.01	9.43	8.49	2.49
137	6.0	90°3' 49"	6.01	9.43	8.49	2.49
138	6.0	90°3' 49"	6.01	9.43	8.49	2.49
139	6.0	90°3' 49"	6.01	9.43	8.49	2.49
140	6.0	90°3' 49"	6.01	9.43	8.49	2.49
141	6.0	90°3' 49"	6.01	9.43	8.49	2.49
142	6.0	90°3' 49"	6.01	9.43	8.49	2.49
143	10.0	66°23' 28"	6.54	11.59	10.95	1.95
144	10.0	66°23' 28"	6.54	11.59	10.95	1.95

GRAPHIC SCALE
20 10 0 20 40
1" = 20'-0" HORIZ.

Precision Systems, Inc.
Engineers, Planners and Architects
WASHINGTON, D.C.

NO	DESCRIPTION	NAME	DATE
	REVISIONS		

HD-12

D.C. DEPARTMENT OF TRANSPORTATION
INFRASTRUCTURE PROJECT MANAGEMENT ADMINISTRATION
PROJECT MANAGEMENT DIVISION

KENNEDY STEET, N.W. IMPROVEMENT
FROM GEORGIA AVENUE TO NORTH CAPITOL STREET

PROJECT ENG. WZ
DESIGNED BY AYY
CHECKED BY MYH
DRAWN BY WZ/YZ
PROJECT MGR. AYY

PAVEMENT PLAN – 12

DIVISION CHIEF
DATE
FILE
SHEET 35 OF 173

p:\60570\civil\plans\pHD_P02_60570.dgn
Tuesday, July 28, 2015 AT 03:41 PM
$PENTBL$$
$PLTDRV$$

REG	STATE	PROJECT	SHEET NO.	TOTAL SHEETS
3	D.C.	FAP No. STP-8888(480)	36	173

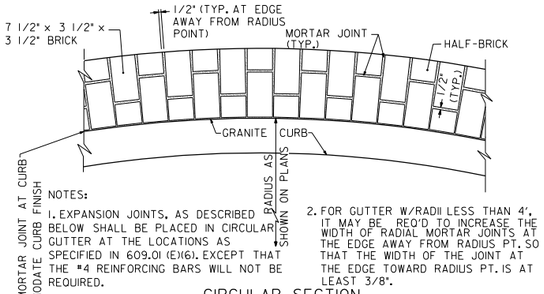

CIRCULAR SECTION

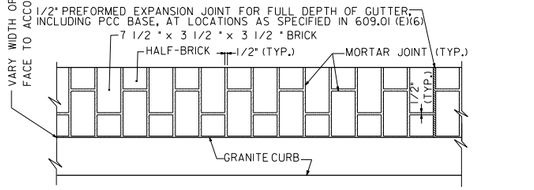

STRAIGHT SECTION

PATTERNS FOR BRICK GUTTER

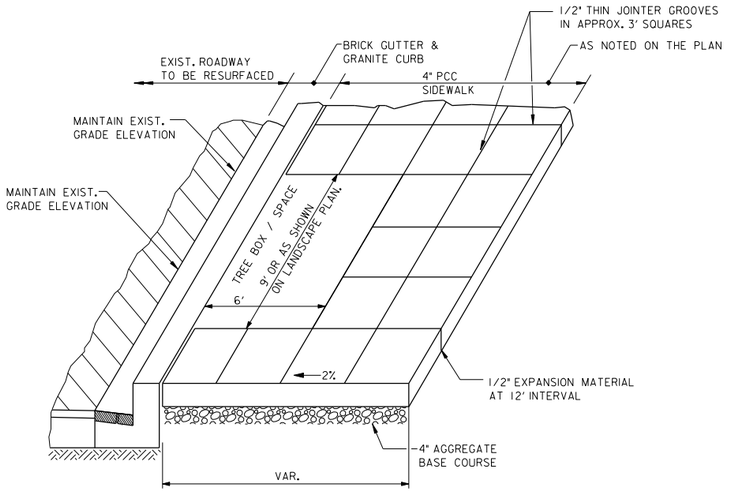

TYPICAL PCC SIDEWALK SECTIONS

NOTES:
1. STANDARD TRANSVERSE SLOPE OF SIDEWALK IS 2% TOWARDS CURB.
2. TREE BOXES SHALL BE 6'X9', EXCEPT AS NOTED ON THE PLANS. CONTINOUS TREE SPACE SHALL BE 6' WIDE, LENGTH AS SHOWN ON PLANS.
3. FOR DETAIL OF CONCRETE PAVER SIDEWALK SEE SHEET 54.

SIDEWALK CONSTRUCTION NOTES

1. CONTRACTOR TO LAYOUT THE FACE OF CURB ACCORDING TO THE GEOMETRY.
2. MAINTAIN THE EXISTING GRADE ELEVATIONS ALONG THE EDGE OF BRICK GUTTER AND THEN BUILD CURBS, GUTTERS AND SIDEWALKS ACCORDING TO THE DETAILS. TOP OF CURB MUST BE SMOOTH, WITHOUT KINKS OR SUDDEN JUMPS.
3. THE TOP OF CURB ELEVATIONS SHOWN ON THE GRADING PLANS MUST BE ADJUSTED TO THE FIELD CONDITIONS. CONTRACTOR SHALL CROSS OUT THE ELEVATIONS, MARK WITH FIELD ELEVATIONS AND SUBMIT THE PLANS AS PARTS OF AS- BUILT DRAWINGS.
4. CONTRACTOR MUST TAKE CARE NOT TO CREATE A DEPRESSED AREA AT THE TIP OF THE CURB EXTENSION. FILL THE DEPRESSED AREA WITH SUPERPAVE TO CREATE POSITIVE DRAIN TO NEARBY CATCH BASINS.

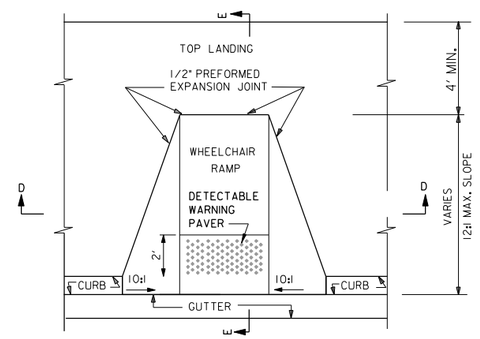

PLAN (DESIRABLE LOCATION)

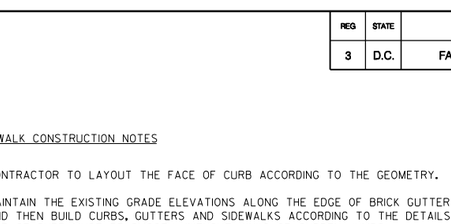

SECTION D-D

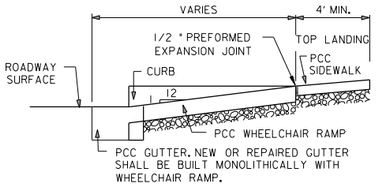

SECTION E-E

WHEEL CHAIR -BYCICLE RAMPS DETAILS

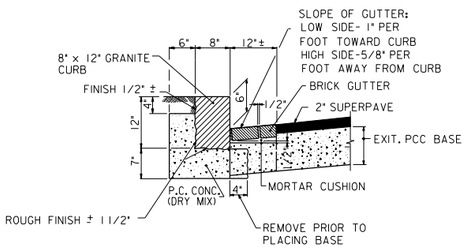

NOTE:
1. CONDITIONS BACK OF CURB VARY AS SHOWN ON PLANS
2. P.C.C. (DRY MIX) SHALL BE PER SPECIFICATIONS AND f'c = 2,500 PSI MIN.
3. MINIMUM DEPTH TO CONCAVE SURFACE ON ROUGH FINISH SHALL BE 10"

8" x 12" GRANITE CURBS

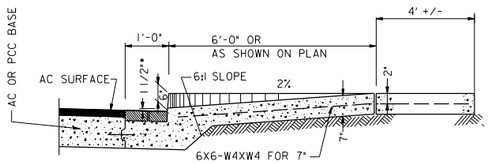

SECTION"A-A"

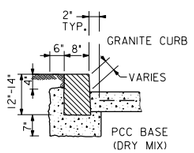

FOR GRANITE CURB SECTION"B-B"

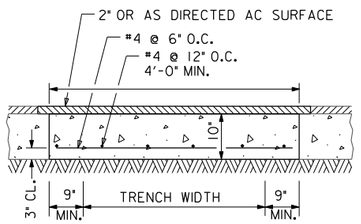

NOTE: PLACE ANCHOR BOLTS PER STANDARD DRAWING 501.05 -501.08

PCC BASE FOR UTILITY CUT

GRAPHIC SCALE
20 10 0 20 40
1" = 20'-0" HORIZ.
NOT TO SCALE

Precision Systems, Inc.
Engineers, Planners and Architects
WASHINGTON, D.C.

NO	DESCRIPTION	NAME	DATE

REVISIONS

HD-13

D.C. DEPARTMENT OF TRANSPORTATION
INFRASTRUCTURE PROJECT MANAGEMENT ADMINISTRATION
PROJECT MANAGEMENT DIVISION

KENNEDY STEET, N.W. IMPROVEMENT
FROM GEORGIA AVENUE TO NORTH CAPITOL STREET

PROJECT ENG. WZ
DESIGNED BY AYY
CHECKED BY MYH
DRAWN BY WZ/YZ
PROJECT MGR. AYY

HIGHWAY DETAILS – 1

DIVISION CHIEF
DATE
FILE
SHEET 36 OF 173

$PENTBLS$
$PLTDRVS$
p:\60570\civil\plans\phD_D001_60570.dgn
Tuesday, July 28, 2015 AT 03:43 PM

REG	STATE	PROJECT	SHEET NO.	TOTAL SHEETS
3	D.C.	FAP No. STP-8888(480)	37	173

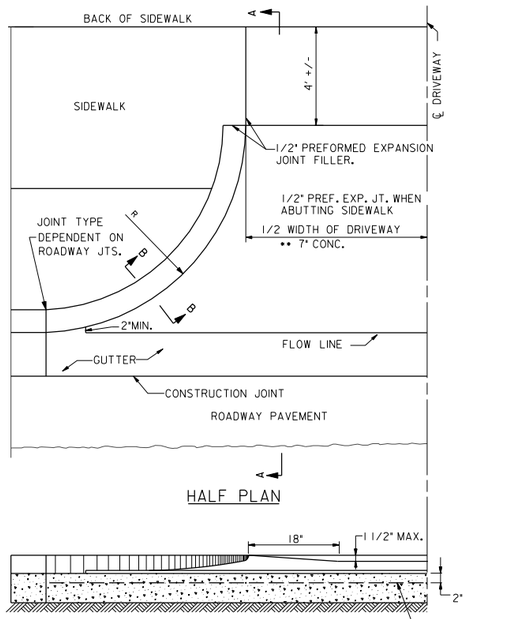

NOTES:
DRIVEWAYS R=6' (UNLESS OTHERWISE SHOWN ON PLAN)
** 7" CONC. USED (UNLESS OTHERWISE SHOWN ON PLAN)

ALLEY - DRIVEWAY ENTRANCE WITH CURB RETURNS TYPE "A"

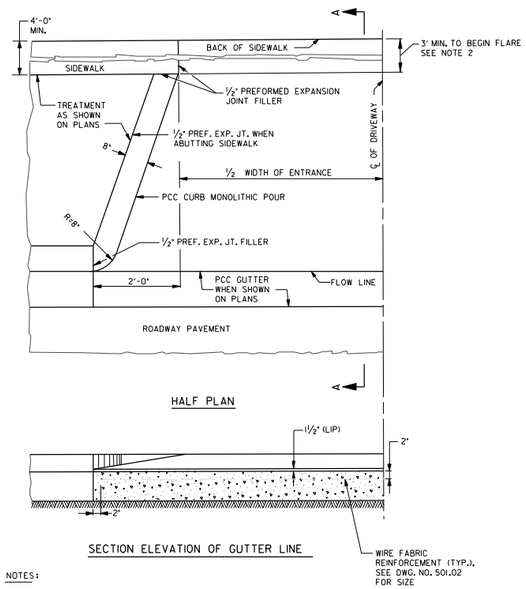

NOTES:
1. 7 IN. PCC USED (UNLESS OTHERWISE SHOWN ON CONTRACT PLANS).
2. TO INSURE CONFORMANCE WITH ADA GUIDELINES WHERE ALLEY AND DRIVEWAY ENTRANCES ABUT SIDEWALK, THE ENTRANCES, INCLUDING ANY INTERVENING CURB RETURN, SHALL BE FLUSH WITH THE ADJACENT SIDEWALK A MINIMUM OF 3 FEET FORWARD FROM THE BACK OF SIDEWALK.

DRIVEWAY ENTRANCE TYPE "B"

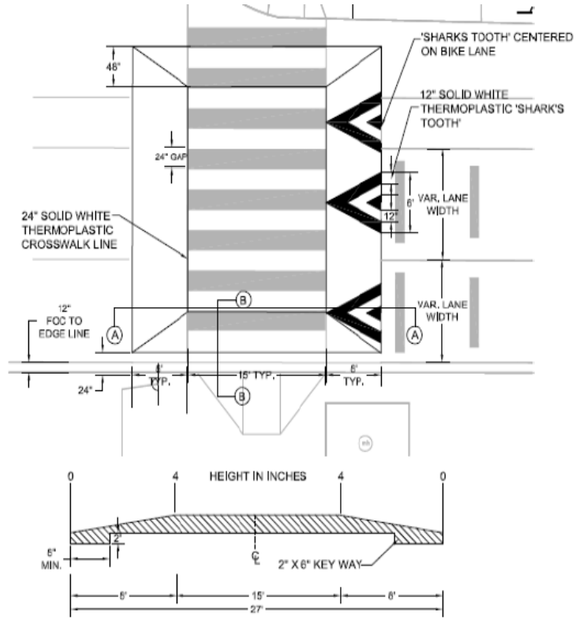

SECTION A-A

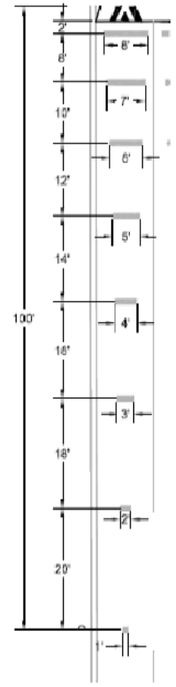

WARNING MARKINGS APPROACHING SPEED TABLE AND RAISED CROSSWALKS
SCALE: 1"=100'

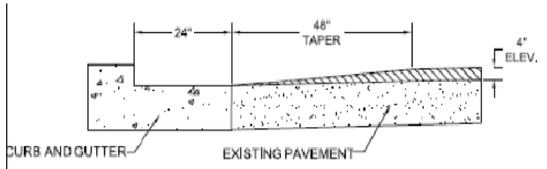

SECTION B-B

RAISED CROSSWALK
SCALE: 1"=5'

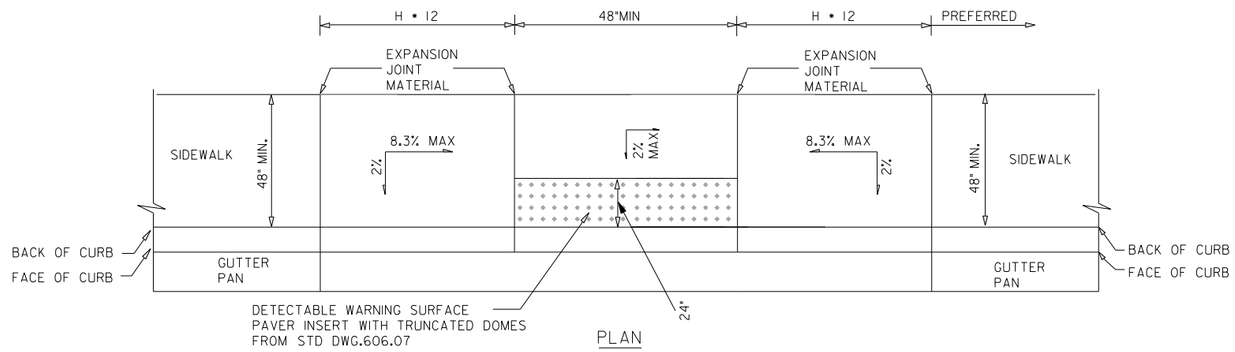

PLAN

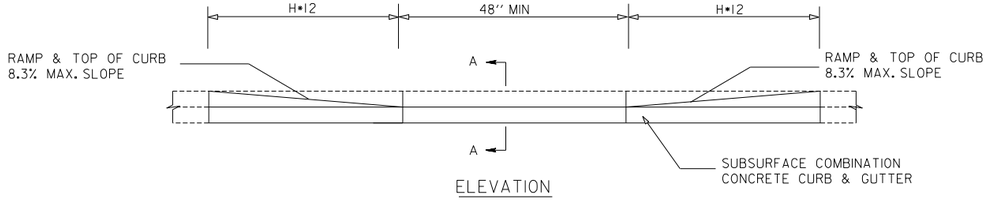

ELEVATION

* H = HEIGHT OF CURB

NOT TO SCALE

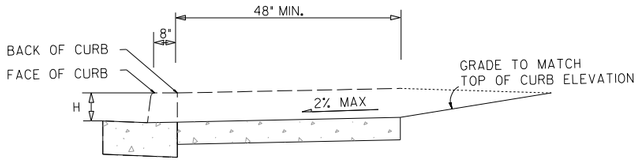

SECTION A-A

SINGLE PARALLEL CONTINUOUS RAMP

HD-14

Precision Systems, Inc.
Engineers, Planners and Architects
WASHINGTON, D.C.

NO	DESCRIPTION	NAME	DATE

REVISIONS

D.C. DEPARTMENT OF TRANSPORTATION
INFRASTRUCTURE PROJECT MANAGEMENT ADMINISTRATION
PROJECT MANAGEMENT DIVISION

KENNEDY STEET, N.W. IMPROVEMENT
FROM GEORGIA AVENUE TO NORTH CAPITOL STREET

PROJECT ENG. WZ
DESIGNED BY AYY
CHECKED BY MYH
DRAWN BY WZ/YZ
PROJECT MGR. AYY

HIGHWAY DETAILS – 2

DIVISION CHIEF
DATE
FILE
SHEET 37 OF 173

$PENTBLS$
$PLTDRV$
p:\60570\civil\plans\pHD_0002_60570.dgn
Tuesday, July 28, 2015 AT 03:43 PM

REG	STATE	PROJECT	SHEET NO.	TOTAL SHEETS
3	D.C.	FAP No. STP-8888(480)	38	173

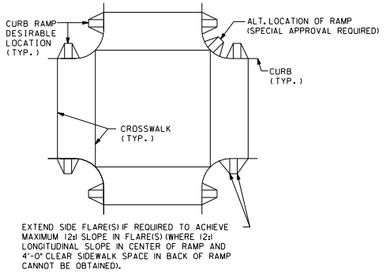

RIGHT-ANGLE INTERSECTION

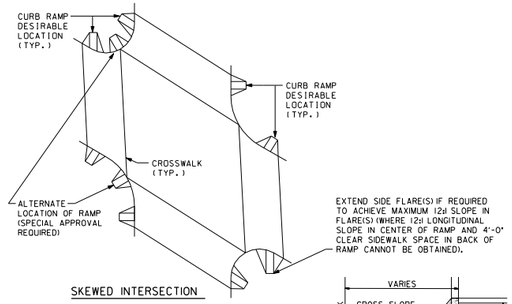

SKEWED INTERSECTION

NOTES:

1. AT FOUR LEGGED INTERSECTIONS, IT IS REQUIRED TO CONSTRUCT TWO RAMPS, ONE FOR EACH DIRECTION OF CROSSING. IF THERE ARE SPACE LIMITATIONS THAT DO NOT PERMIT THE CONSTRUCTION OF TWO INDEPENDENT RAMPS, SUCH AS TELEPHONE POLES, FIRE HYDRANTS, STORM DRAIN INLETS, ETC., PROVISIONS SHOULD BE MADE TO RELOCATE THE OBSTRUCTION. IF THE 12:1 LONGITUDINAL SLOPE CANNOT BE ACHIEVED WHERE RAMPS ARE SHOWN, SPECIAL APPROVAL SHALL BE OBTAINED TO CONSTRUCT ONE RAMP AT THE CORNER AND MODIFY THE CROSSWALKS. SEE DRAWINGS 609.06 AND 609.07 FOR DETAILS.
2. RAMP LOCATION SHALL BE GOVERNED BY CROSSWALK WIDTH, 15'-20' AS DIRECTED. ALL RAMPS, INCLUDING SIDE FLARES, SHALL BE LOCATED WITHIN A CROSSWALK. ONE SIDE FLARE SHALL ALIGN WITH THE BACK EDGE LINE OF THE CROSSWALK.
3. FOR SKEWED INTERSECTION, ACUTE CORNER SHALL DETERMINE THE LOCATION OF LIGHT POLES, RAMPS AND CROSSWALKS.
4. ALL RAMPS SHALL CONFORM TO THE LATEST AMERICANS WITH DISABILITIES ACT ACCESSIBILITY GUIDELINES (ADAAG) CRITERIA.
5. DIMENSIONS SHOWN ARE FOR NEW CONSTRUCTION. FOR ALTERATIONS WHEN THESE DIMENSIONS ARE IMPRACTICAL, REVIEW ADAAG FOR LESS STRICT DIMENSIONS.
6. INSTALL DETECTABLE WARNING SURFACE PAVERS WITH TRUNCATED DOMES FOR A DISTANCE OF 24" FROM THE BACK OF THE CURB AS SHOWN.
7. THE SURFACE OF THE RAMP SHALL BE BROOM FINISHED (STEEL BRISTLE).
8. RAMP SHALL BE CONSTRUCTED WITH PCC SIDEWALK CONCRETE (NO DARKENING AGENTS).
9. ANY LIGHT POLE FOUNDATION SHALL BE CONSTRUCTED INDEPENDENTLY OF RAMP.
10. DESIGN STORM DRAIN SYSTEMS TO SHED WATER AWAY FROM RAMPS.
11. FINAL LOCATION OF RAMP WILL BE DECIDED BY THE ENGINEER ON SITE.

10d MAX. SLOPE IS ALLOWED ON FLARES ONLY IF THERE IS A MINIMUM 4' LEVEL (2% MAX.) LANDING AT THE TOP OF RAMP. IF 4' CANNOT BE ACHIEVED, THEN 12d IS THE MAX. SLOPE IN THE FLARES.

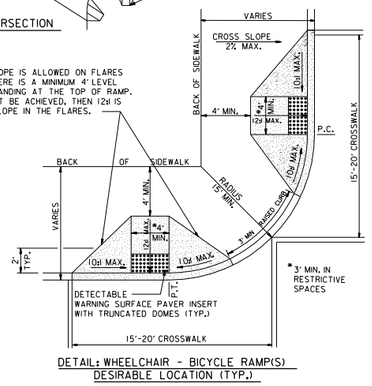

DETAIL: WHEELCHAIR - BICYCLE RAMP(S) DESIRABLE LOCATION (TYP.)

WHEELCHAIR/BICYCLE RAMP LOCATIONS

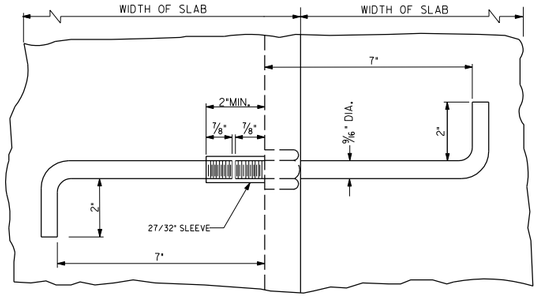

PLAN

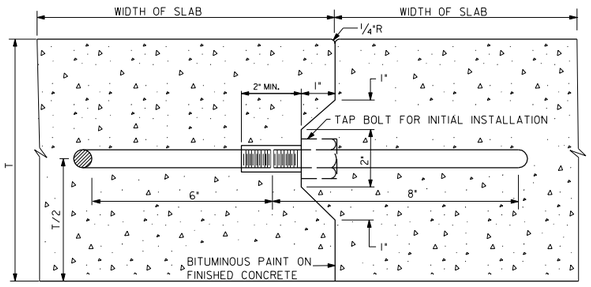

CROSS SECTION

TIE ROD ASSEMBLY
(CONSTRUCTION JOINT)

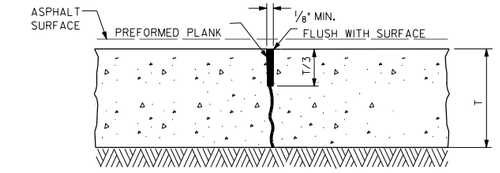

CONTRACTION JOINT FOR PCC BASE

* JOINT SEALER NOT REQUIRED FOR PCC BASE.

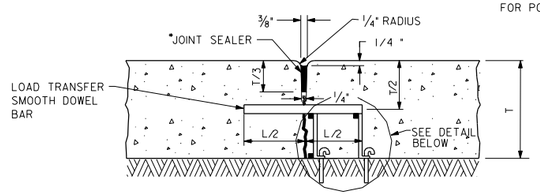

CONTRACTION JOINT FOR PCC PAVEMENT

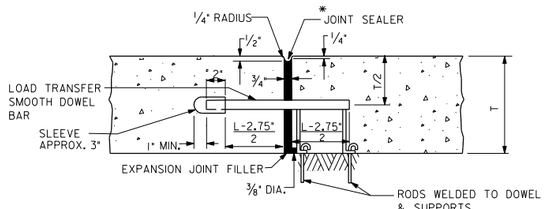

TYPICAL EXPANSION JOINT

(OTHER DESIGNS OF EQUAL STRENGTH MAY BE USED, SUBJECT TO PRIOR APPROVAL)

DIAMETER OF DOWEL BARS
WHEN T = 8" ; 1" DIA.
WHEN T = 9" OR 10" ; 1 1/4" DIA.

LENGTH OF DOWEL BARS
DOWEL BAR > 1" DIA.; L = 12 DIA. ± 2.5"
MIN. TOTAL LENGTH OF 1" DOWEL BAR FOR EXPANSION JOINT = 14 1/2"

TIE ROD ASSEMBLY AND JOINTS WITH LOAD TRANSFER

TRANSVERSE JOINTS

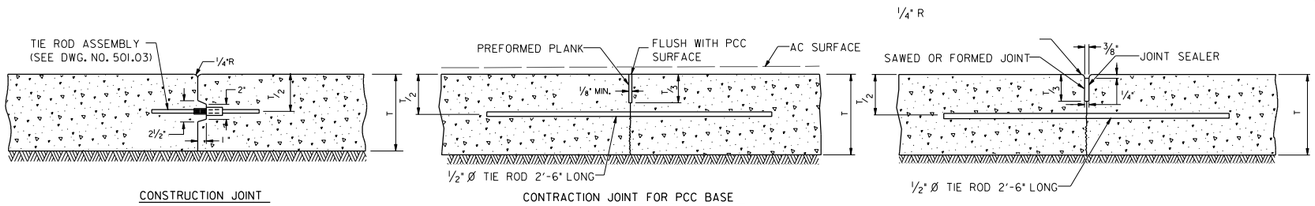

CONSTRUCTION JOINT

CONTRACTION JOINT FOR PCC BASE

CONTRACTION JOINT FOR PCC PAVEMENT

LONGITUDINAL CONTRACTION AND CONSTRUCTION JOINTS

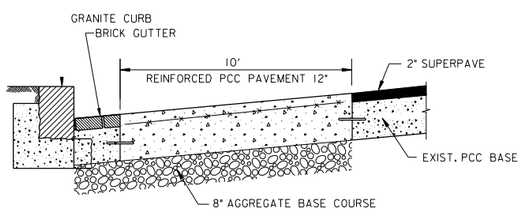

PCC BUS STOP PAD

SECTION"C-C"

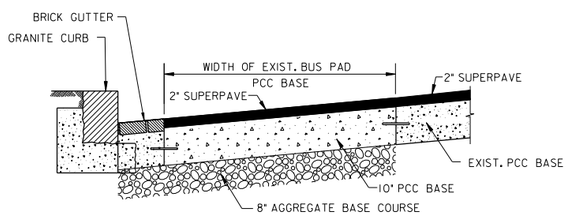

BACK FILL REMOVED BUS STOP PAD

SECTION"C-C"

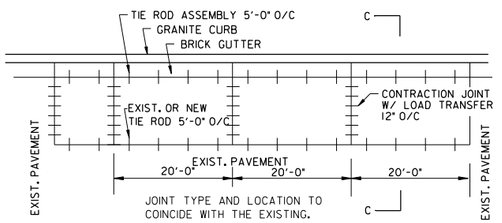

PCC BUS STOP PAD PLAN

BACK FILL REMOVED BUS STOP PAD

HD-15

D.C. DEPARTMENT OF TRANSPORTATION
INFRASTRUCTURE PROJECT MANAGEMENT ADMINISTRATION
PROJECT MANAGEMENT DIVISION

KENNEDY STEET, N.W. IMPROVEMENT
FROM GEORGIA AVENUE TO NORTH CAPITOL STREET

PROJECT ENG. WZ
DESIGNED BY AYY
CHECKED BY MYH
DRAWN BY WZ/YZ
PROJECT MGR. AYY

HIGHWAY DETAILS – 3

DIVISION CHIEF
DATE
FILE
SHEET 38 OF 173

Precision Systems, Inc.
Engineers, Planners and Architects
WASHINGTON, D.C.

NO	DESCRIPTION	NAME	DATE

REVISIONS

$PENTBLS$
$PLTDRVS$
pt\60570\civil\plans\phD.0003.60570.dgn
Tuesday, July 28, 2015 AT 03:44 PM

REG	STATE	PROJECT	SHEET NO.	TOTAL SHEETS
3	D.C.	FAP No. STP-8888(480)	39	173

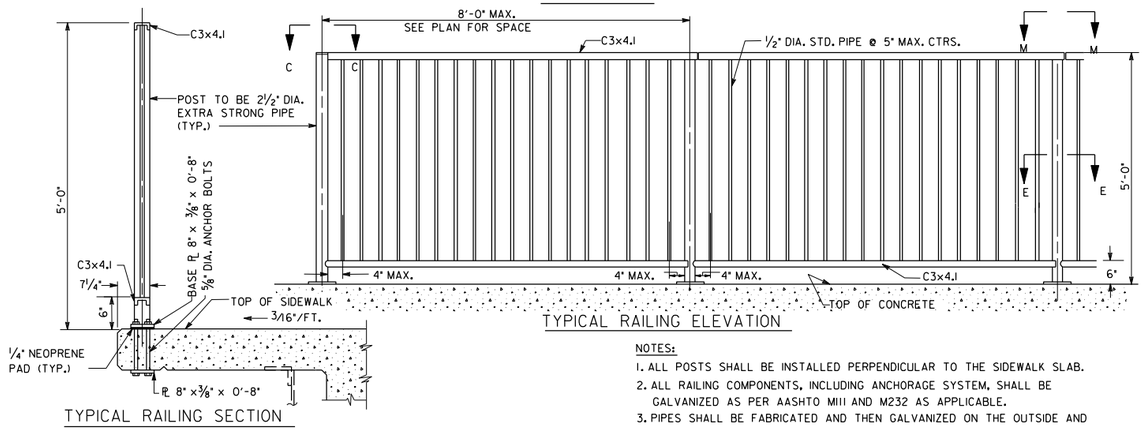

TYPICAL RAILING ELEVATION

TYPICAL RAILING SECTION

NOTES:

1. ALL POSTS SHALL BE INSTALLED PERPENDICULAR TO THE SIDEWALK SLAB.
2. ALL RAILING COMPONENTS, INCLUDING ANCHORAGE SYSTEM, SHALL BE GALVANIZED AS PER AASHTO M111 AND M232 AS APPLICABLE.
3. PIPES SHALL BE FABRICATED AND THEN GALVANIZED ON THE OUTSIDE AND INSIDE.

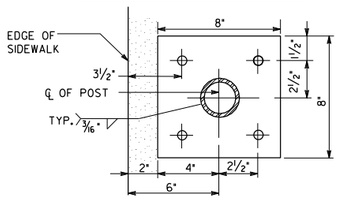

BASE PLATE DETAIL

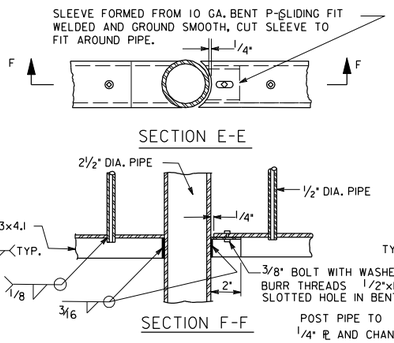

SECTION E-E

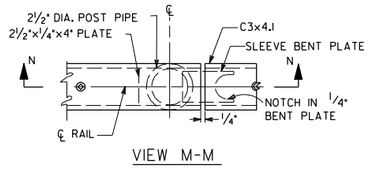

VIEW M-M

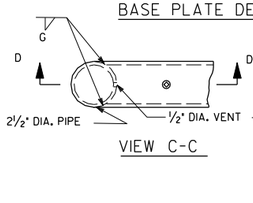

VIEW C-C

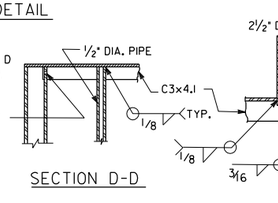

SECTION D-D

SECTION F-F

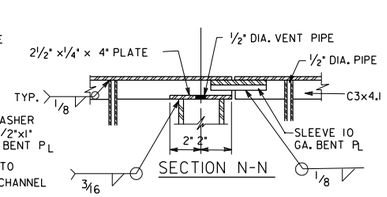

SECTION N-N

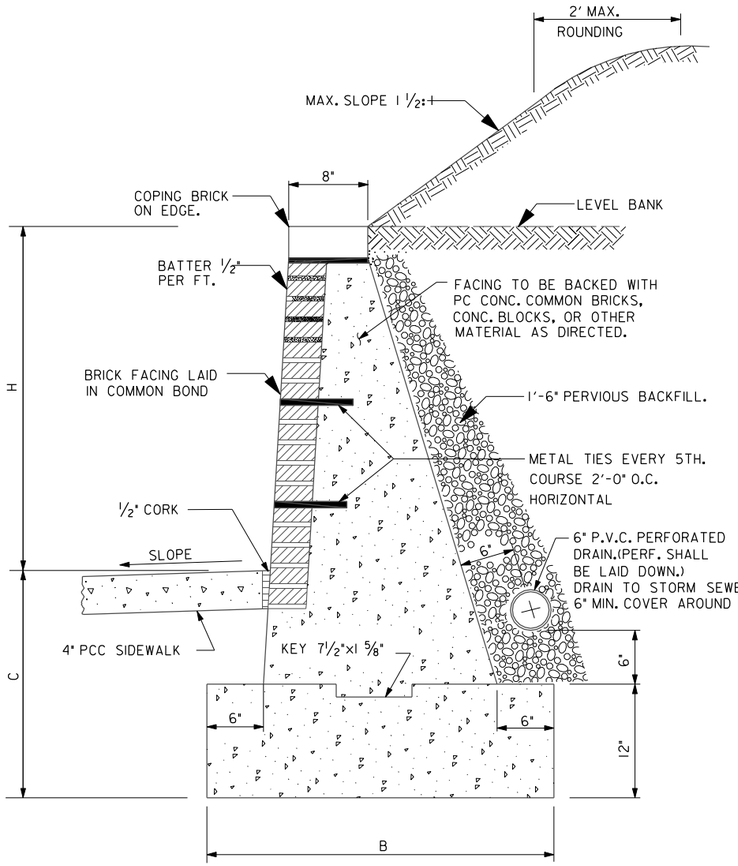

BRICK MASONRY GRAVITY RETAINING WALL

SLOPING SURCHARGE MAX. SLOPE 1 ½:1

H	B	C	QUANTITIES (CU. YD./LIN. FT.)	
FT.	FT. IN.	FT. IN.	FOOTING	WALL
2'	2'-6"	2'-0"	0.093	0.121
3'	3'-0"	2'-0"	0.111	0.198
4'	3'-6"	2'-0"	0.130	0.294
5'	4'-2"	2'-0"	0.155	0.427
6'	4'-10"	2'-0"	0.179	0.584
7'	5'-11"	2'-6"	0.220	0.880
8'	6'-8"	2'-6"	0.247	1.116
9'	7'-5"	2'-6"	0.275	1.379
10'	8'-1"	2'-6"	0.299	1.651
11'	8'-10"	2'-6"	0.327	1.968
12'	9'-8"	2'-6"	0.358	2.335

WITHOUT SURCHARGE-LEVEL BANK

H	B	C	QUANTITIES (CU. YD./LIN. FT.)	
FT.	FT. IN.	FT. IN.	FOOTING	WALL
2'	2'-3"	2'-0"	0.084	0.107
3'	2'-7"	2'-0"	0.096	0.168
4'	3'-0"	2'-0"	0.111	0.248
5'	3'-4"	2'-0"	0.124	0.334
6'	3'-9"	2'-0"	0.139	0.444
7'	4'-6"	2'-6"	0.167	0.657
8'	5'-0"	2'-6"	0.185	0.822
9'	5'-6"	2'-6"	0.204	1.006
10'	6'-0"	2'-6"	0.223	1.208
11'	6'-6"	2'-6"	0.241	1.429
12'	7'-0"	2'-6"	0.260	1.668

NOTES:
1. THE ABOVE QUANTITY FOR WALLS INCLUDES BRICK FACING.
2. SPACING OF EXPANSION JOINTS 90' MAX. AND CONSTRUCTION JOINTS 30' MAX.

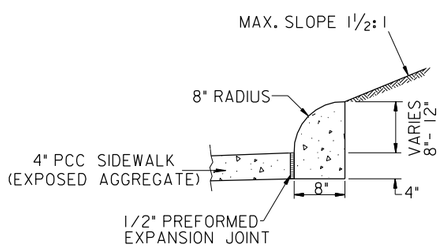

STANDARD PC CONC. COPING

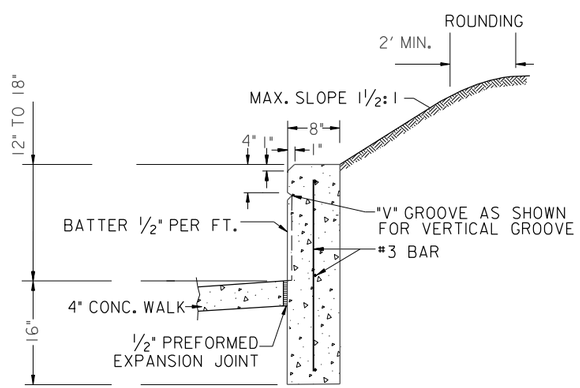

SPECIAL CONCRETE COPING

HD-16

D.C. DEPARTMENT OF TRANSPORTATION
INFRASTRUCTURE PROJECT MANAGEMENT ADMINISTRATION
PROJECT MANAGEMENT DIVISION

KENNEDY STEET, N.W. IMPROVEMENT
FROM GEORGIA AVENUE TO NORTH CAPITOL STREET

PROJECT ENG. WZ
DESIGNED BY AYY
CHECKED BY MYH
DRAWN BY WZ/YZ
PROJECT MGR. AYY

HIGHWAY DETAILS – 4

DIVISION CHIEF
DATE
FILE
SHEET 39 OF 173

PSI
Precision Systems, Inc.
Engineers, Planners and Architects
WASHINGTON, D.C.

NO	DESCRIPTION	NAME	DATE

REVISIONS

p:\60570\civil\plans\phD.0004.60570.dgn
Tuesday, July 28, 2015 AT 03:44 PM
$PENTBLS$
$PLTDRVS$

REG	STATE	PROJECT	SHEET NO.	TOTAL SHEETS
3	D.C.	FAP No. STP-8888(480)	40	173

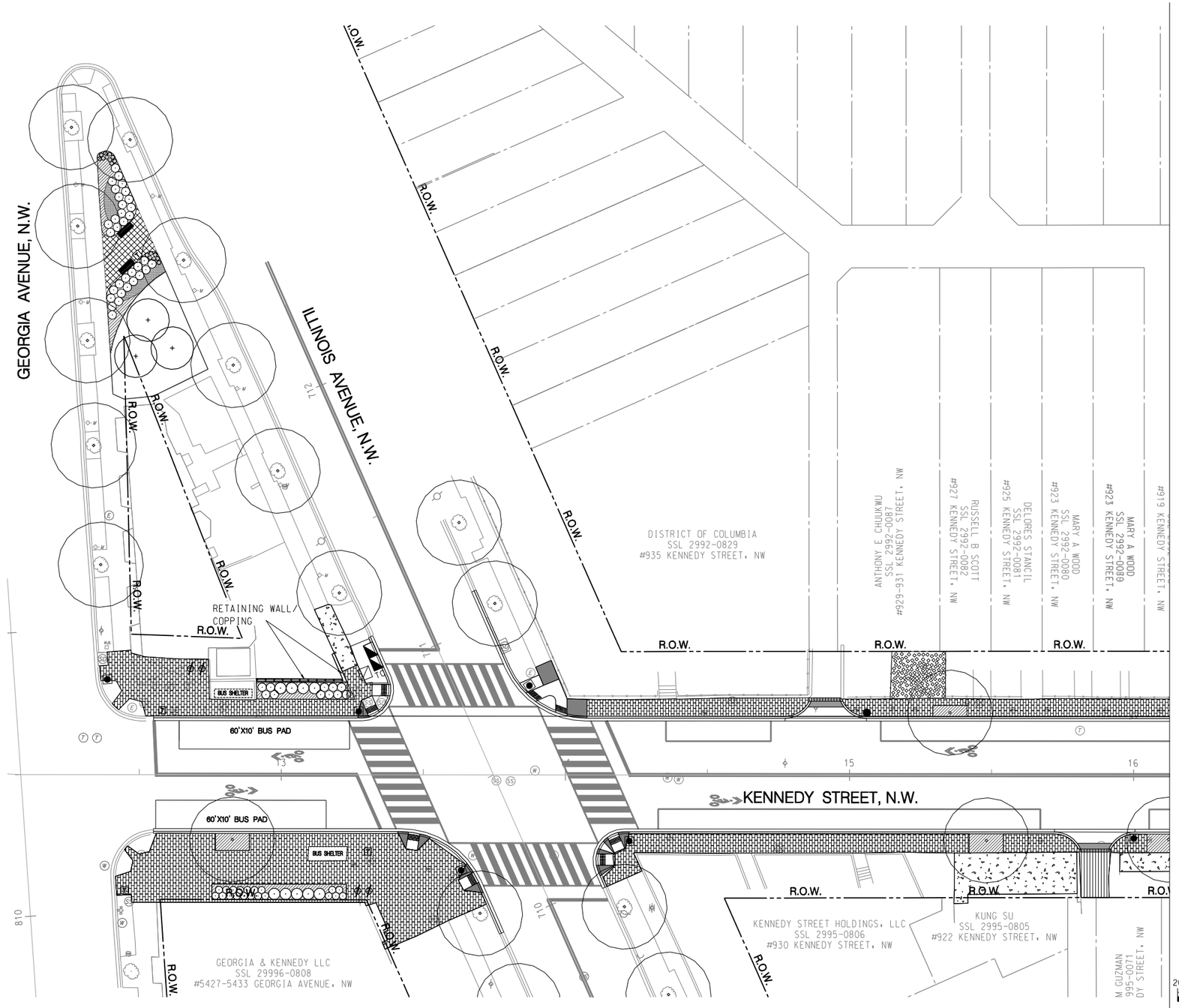

MATCHLINE SEE SHEET LS-2

SYMBOL LEGEND

- EXISTING TREE TO REMAIN
- EXISTING TREE TO REMOVE
- PROPOSED TREE
- CONCRETE SIDEWALK
- VEHICULAR CONCRETE AREA
- PERMEABLE PAVER SIDEWALK
- BRICK SIDEWALK
- PROPOSED MULCH
- TREE BOX
- FLEXIBLE POROUS PAVEMENT
- EXISTING BUS SHELTER
- PROPOSED BUS SHELTER
- PROPOSED BENCH
- PROPOSED TRASH RECEPTACLE (LITTER BASKET)
- PROPOSED BIKE RACK (BIKE LOCKER)
- PROPOSED OBSERVATION WELL (OW)
- PROPOSED RAILING
- PEDESTRIAN WALKWAY AT DRIVEWAY/ALLEY
- R.O.W. RIGHT-OF-WAY LINE

PERMEABLE PAVER AREA ID	DEPTH OF RESERVOIR LAYER (INCH)
PP-1	18
PP-2	14
PP-3	13
PP-4	15
PP-5	15
PP-6	14

GRAPHIC SCALE

20 10 0 20 40

1" = 20'-0" HORIZ.

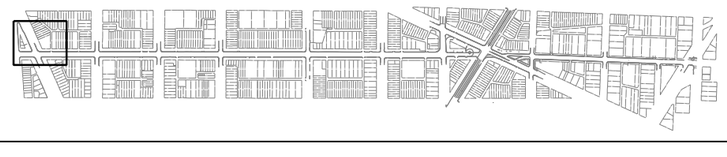

LS-01

RHODESIDE & HARWELL
910 King Street
Suite 300
Alexandria, VA 22314
703-683-7447 ph
703-683-7448 fx
www.rhodeside-harwell.com
Landscape Architecture and Planning

Precision Systems, Inc.
Engineers, Planners and Architects
WASHINGTON, D.C.

NO.	DESCRIPTION	NAME	DATE

REVISIONS

D.C. DEPARTMENT OF TRANSPORTATION
INFRASTRUCTURE PROJECT MANAGEMENT ADMINISTRATION
PROJECT MANAGEMENT DIVISION

KENNEDY STEET, N.W. IMPROVEMENT
FROM GEORGIA AVENUE TO NORTH CAPITOL STREET

LANDSCAPE PLAN – 1

PROJECT ENG. WZ
DESIGNED BY AYY
CHECKED BY MYH
DRAWN BY WZ/YZ
PROJECT MGR. AYY

DIVISION CHIEF
DATE
FILE
SHEET 40 OF 173

p:\60570\landscape design\pLD-P00i-KennedyStreetImprovement.dgn $PENTBLS$
Tuesday, July 28, 2015 AT 03:46 PM $PLTDRV$

REG	STATE	PROJECT	SHEET NO.	TOTAL SHEETS
3	D.C.	FAP No. STP-8888(480)	41	173

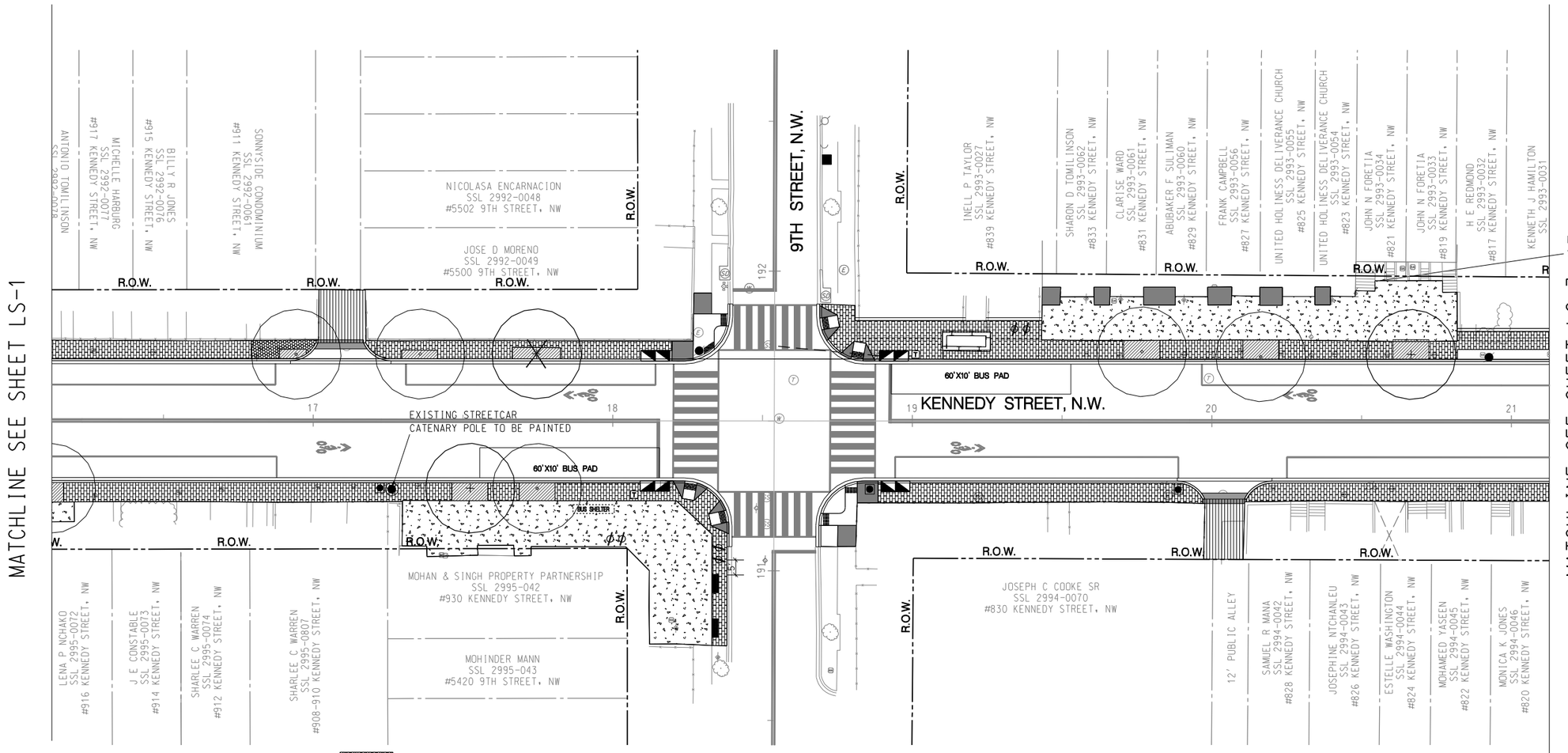

SYMBOL LEGEND

- EXISTING TREE TO REMAIN
- EXISTING TREE TO REMOVE
- PROPOSED TREE
- CONCRETE SIDEWALK
- VEHICULAR CONCRETE AREA
- PERMEABLE PAVER SIDEWALK
- BRICK SIDEWALK
- FLEXIBLE POROUS PAVEMENT
- EXISTING BUS SHELTER
- PROPOSED BUS SHELTER
- PROPOSED BENCH
- PROPOSED TRASH RECEPTACLE (LITTER BASKET)
- PROPOSED BIKE RACK (BIKE LOCKER)
- PROPOSED OBSERVATION WELL
- PROPOSED RAILING
- PEDESTRIAN WALKWAY AT DRIVEWAY/ALLEY
- R.O.W. RIGHT-OF-WAY LINE
- TREE BOX

GRAPHIC SCALE

20 10 0 20 40

1" = 20'-0" HORIZ.

RHODESIDE & HARWELL
810 King Street
Suite 300
Alexandria, VA 22314
703-683-7447 ph
703-683-7448 fx
www.rhodeside-harwell.com
Landscape Architecture and Planning

Precision Systems, Inc.
Engineers, Planners and Architects
WASHINGTON, D.C.

NO.	DESCRIPTION	NAME	DATE

REVISIONS

D.C. DEPARTMENT OF TRANSPORTATION
INFRASTRUCTURE PROJECT MANAGEMENT ADMINISTRATION
PROJECT MANAGEMENT DIVISION

KENNEDY STEET, N.W. IMPROVEMENT
FROM GEORGIA AVENUE TO NORTH CAPITOL STREET

LANDSCAPE PLAN – 2

PROJECT ENG. WZ
DESIGNED BY AYY
CHECKED BY MYH
DRAWN BY WZ/YZ
PROJECT MGR. AYY

DIVISION CHIEF
DATE
FILE
SHEET 41 OF 173

LS-02

p:\60570\landscape design\pLD-P002-KennedyStreetImprovement.dgn $PENTBLS$
Tuesday, July 28, 2015 AT 03:46 PM $PLTDRVS$

REG	STATE	PROJECT	SHEET NO.	TOTAL SHEETS
3	D.C.	FAP No. STP-8888(480)	42	173

MATCHLINE SEE SHEET LS-2

MATCHLINE SEE SHEET LS-4

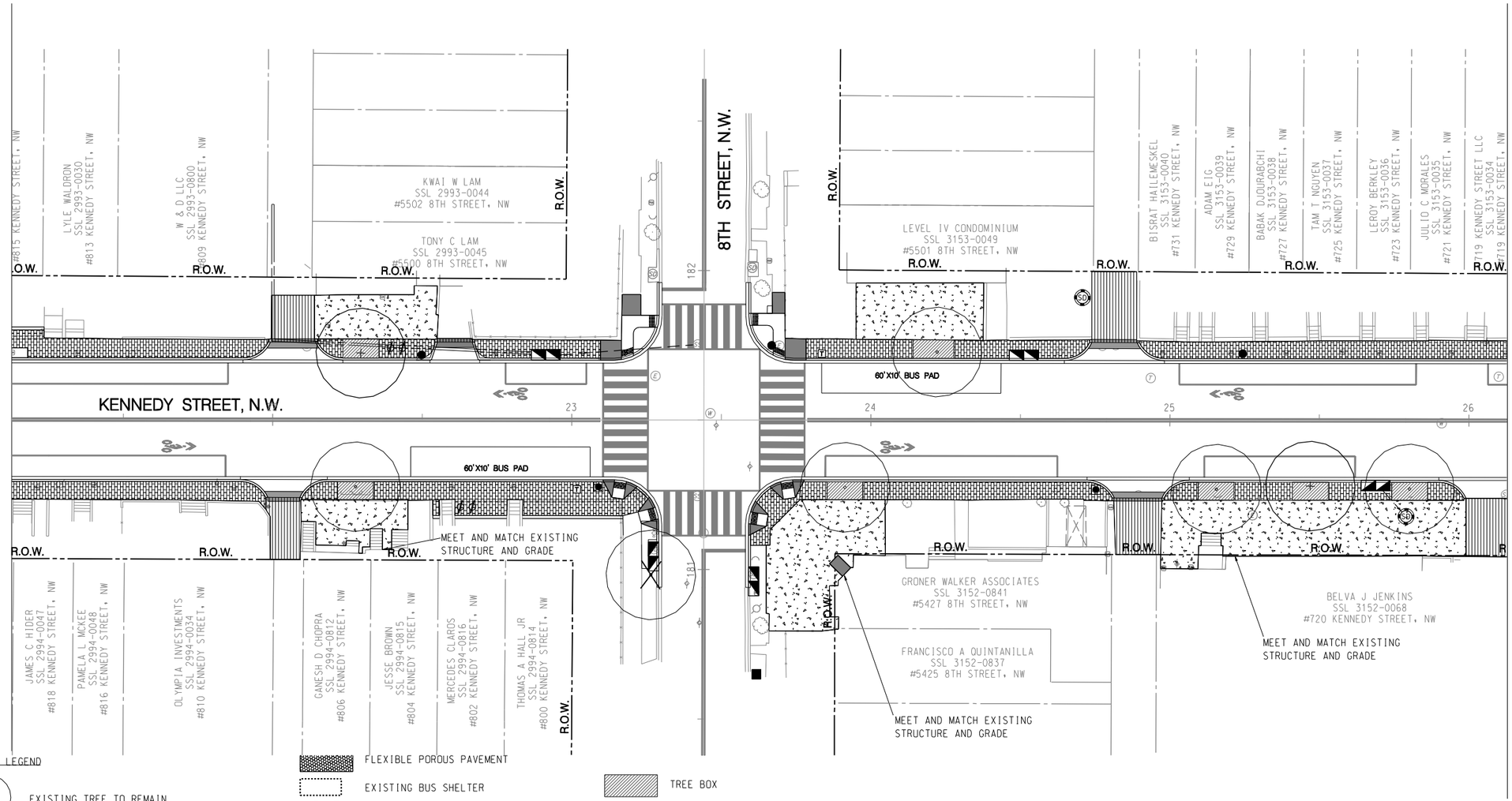

SYMBOL LEGEND

- EXISTING TREE TO REMAIN
- EXISTING TREE TO REMOVE
- PROPOSED TREE
- CONCRETE SIDEWALK
- VEHICULAR CONCRETE AREA
- PERMEABLE PAVER SIDEWALK
- BRICK SIDEWALK
- FLEXIBLE POROUS PAVEMENT
- EXISTING BUS SHELTER
- PROPOSED BUS SHELTER
- PROPOSED BENCH
- PROPOSED TRASH RECEPTACLE (LITTER BASKET)
- PROPOSED BIKE RACK (BIKE LOCKER)
- PROPOSED OBSERVATION WELL
- PROPOSED RAILING
- PEDESTRIAN WALKWAY AT DRIVEWAY/ALLEY
- R.O.W. RIGHT-OF-WAY LINE
- TREE BOX

GRAPHIC SCALE

20 10 0 20 40

1" = 20'-0" HORIZ.

N

LS-03

D.C. DEPARTMENT OF TRANSPORTATION
INFRASTRUCTURE PROJECT MANAGEMENT ADMINISTRATION
PROJECT MANAGEMENT DIVISION

KENNEDY STEET, N.W. IMPROVEMENT
FROM GEORGIA AVENUE TO NORTH CAPITOL STREET

LANDSCAPE PLAN – 3

PROJECT ENG. WZ
DESIGNED BY AYY
CHECKED BY MYH
DRAWN BY WZ/YZ
PROJECT MGR. AYY

DIVISION CHIEF
DATE
FILE
SHEET 42 OF 173

NO	DESCRIPTION	NAME	DATE

REVISIONS

RHODESIDE & HARWELL
610 King Street
Suite 300
Alexandria, VA 22314
703-683-7447 ph
703-683-7449 fx
www.rhodeside-harwell.com
Landscape Architecture and Planning

Precision Systems, Inc.
Engineers, Planners and Architects
WASHINGTON, D.C.

p:\60570\landscape design\pLD-P003-KennedyStreetImprovement.dgn $PENTBLS$
Tuesday, July 28, 2015 AT 03:47 PM $PLTDRVS$

REG	STATE	PROJECT	SHEET NO.	TOTAL SHEETS
3	D.C.	FAP No. STP-8888(480)	43	173

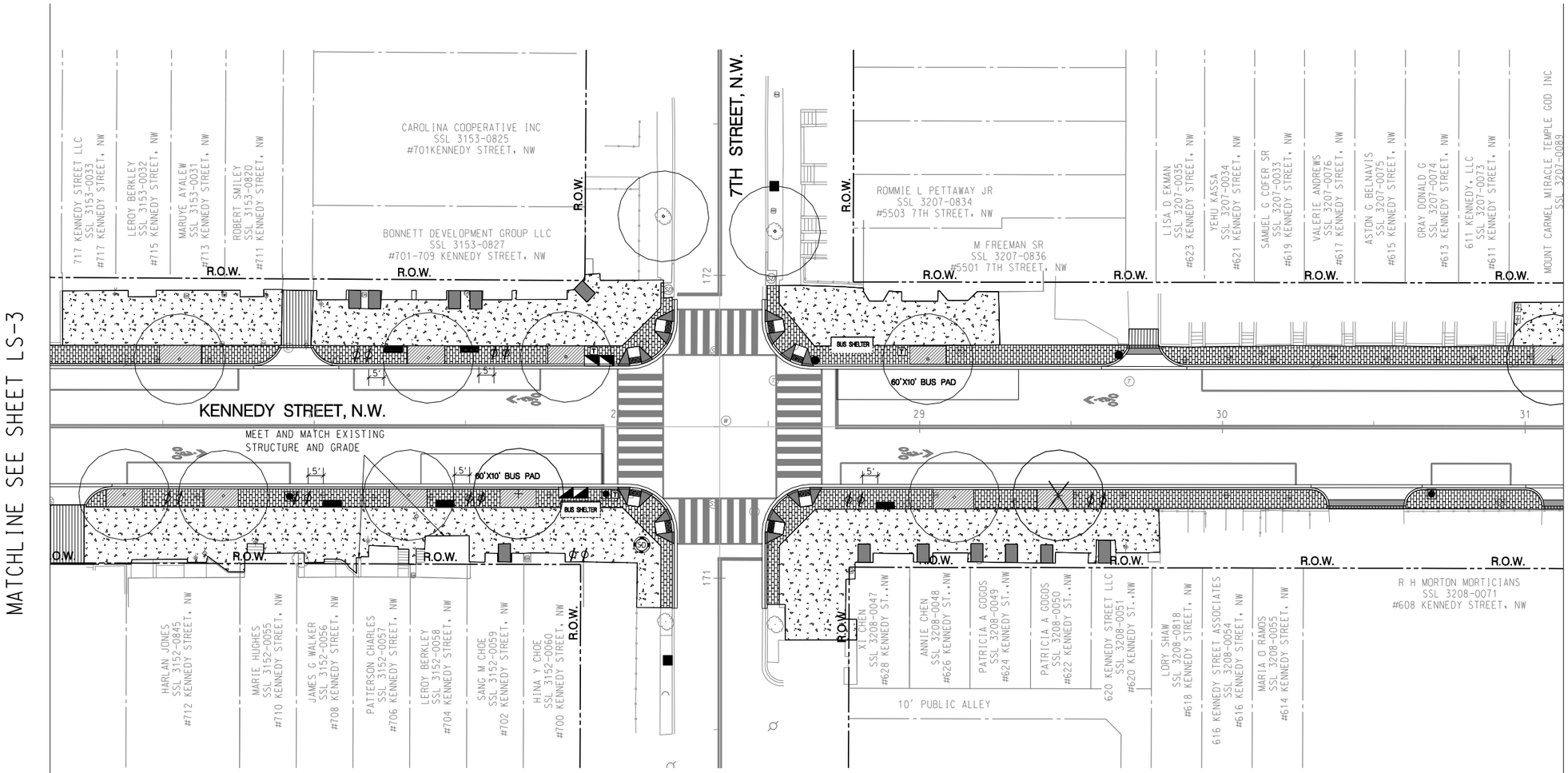

SYMBOL LEGEND

- EXISTING TREE TO REMAIN
- EXISTING TREE TO REMOVE
- PROPOSED TREE
- CONCRETE SIDEWALK
- VEHICULAR CONCRETE AREA
- PERMEABLE PAVER SIDEWALK
- BRICK SIDEWALK
- FLEXIBLE POROUS PAVEMENT
- EXISTING BUS SHELTER
- PROPOSED BUS SHELTER
- PROPOSED BENCH
- PROPOSED TRASH RECEPTACLE (LITTER BASKET)
- PROPOSED BIKE RACK (BIKE LOCKER)
- PROPOSED OBSERVATION WELL
- PROPOSED RAILING
- PEDESTRIAN WALKWAY AT DRIVEWAY/ALLEY
- R.O.W. RIGHT-OF-WAY LINE
- TREE BOX

GRAPHIC SCALE

20 10 0 20 40

1" = 20'-0" HORIZ.

N

LS-04

RHODESIDE & HARWELL
810 King Street
Suite 300
Alexandria, VA 22314
703-683-7447 ph
703-683-7448 fx
www.rhodeside-harwell.com
Landscape Architecture and Planning

Precision Systems, Inc.
Engineers, Planners and Architects
WASHINGTON, D.C.

NO.	DESCRIPTION	NAME	DATE

REVISIONS

D.C. DEPARTMENT OF TRANSPORTATION
INFRASTRUCTURE PROJECT MANAGEMENT ADMINISTRATION
PROJECT MANAGEMENT DIVISION

KENNEDY STEET, N.W. IMPROVEMENT
FROM GEORGIA AVENUE TO NORTH CAPITOL STREET

LANDSCAPE PLAN – 4

PROJECT ENG. WZ
DESIGNED BY AYY
CHECKED BY MYH
DRAWN BY WZ/YZ
PROJECT MGR. AYY

DIVISION CHIEF

DATE

FILE

SHEET 43 OF 173

p:\60570\landscape design\pLD-P004-KennedyStreetImprovement.dgn $PENTBLS$
Tuesday, July 28, 2015 AT 03:47 PM $PLTDRVS$

REG	STATE	PROJECT	SHEET NO.	TOTAL SHEETS
3	D.C.	FAP No. STP-8888(480)	44	173

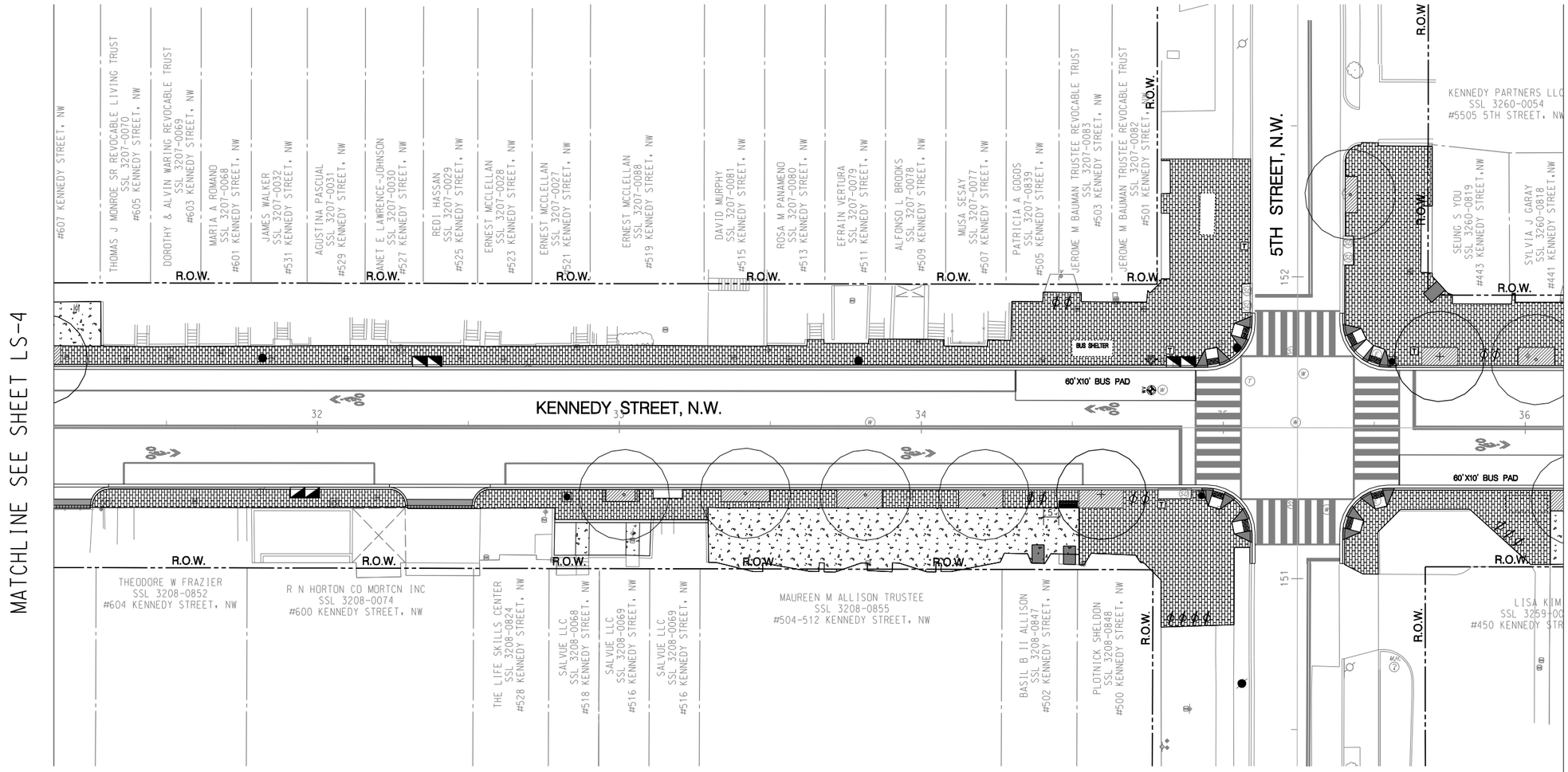

SYMBOL LEGEND

- EXISTING TREE TO REMAIN
- EXISTING TREE TO REMOVE
- PROPOSED TREE
- CONCRETE SIDEWALK
- VEHICULAR CONCRETE AREA
- PERMEABLE PAVER SIDEWALK
- BRICK SIDEWALK
- FLEXIBLE POROUS PAVEMENT
- EXISTING BUS SHELTER
- PROPOSED BUS SHELTER
- PROPOSED BENCH
- PROPOSED TRASH RECEPTACLE (LITTER BASKET)
- PROPOSED BIKE RACK (BIKE LOCKER)
- PROPOSED OBSERVATION WELL
- PROPOSED RAILING
- PEDESTRIAN WALKWAY AT DRIVEWAY/ALLEY
- R.O.W. RIGHT-OF-WAY LINE
- TREE BOX

GRAPHIC SCALE

20 10 0 20 40

1" = 20'-0" HORIZ.

N

LS-05

D.C. DEPARTMENT OF TRANSPORTATION
INFRASTRUCTURE PROJECT MANAGEMENT ADMINISTRATION
PROJECT MANAGEMENT DIVISION

KENNEDY STEET, N.W. IMPROVEMENT
FROM GEORGIA AVENUE TO NORTH CAPITOL STREET

PROJECT ENG. WZ
DESIGNED BY AYY
CHECKED BY MYH
DRAWN BY WZ/YZ
PROJECT MGR. AYY

LANDSCAPE PLAN – 5

DIVISION CHIEF
DATE
FILE
SHEET 44 OF 173

RHODESIDE & HARWELL
810 King Street
Suite 300
Alexandria, VA 22314
703-683-7447 ph
703-683-7448 fx
www.rhodeside-harwell.com
Landscape Architecture and Planning

Precision Systems, Inc.
Engineers, Planners and Architects
WASHINGTON, D.C.

NO.	DESCRIPTION	NAME	DATE

REVISIONS

p:\60570\landscape design\pLD-P005-KennedyStreetimprovement.dgn $PENTBLS$
Tuesday, July 28, 2015 AT 03:47 PM $PLTDRVS$

REG	STATE	PROJECT	SHEET NO.	TOTAL SHEETS
3	D.C.	FAP No. STP-8888(480)	45	173

MATCHLINE SEE SHEET LS-5

MATCHLINE SEE SHEET LS-7

KENNEDY STREET, N.W.

4TH STREET, N.W.

JOSE C HERNANDEZ SSL 3260-0820 #439 KENNEDY STREET, NW

MADISON PROPRTIES INC SSL 3260-0840 #437 KENNEDY STREET, NW

435 KENNEDY STREET CONDOMINIUM SSL 3260-0043 #435 KENNEDY STREET, NW

MICHELLE SMITH SSL 3260-0042 #433 KENNEDY STREET, NW

OLOSEYE OPESAMI SSL 3260-0041 #431 KENNEDY STREET, NW

LAWRENCE W PERRY JR SSL 3260-0041 #429 KENNEDY STREET, NW

CAROLYN WOODS SSL 3260-0048 #427 KENNEDY STREET, NW

FURMAN DAVIS JR SSL 3260-0047 #423 KENNEDY STREET, NW

LOUIS R WILLIAMS SSL 3260-0046 #419 KENNEDY STREET, NW

UNIVERSAL II MORTUARY SERVICE, INC SSL 3260-0809 #413 KENNEDY STREET, NW

UNIVERSAL II MORTUARY SERVICE, INC SSL 3260-0045 #411 KENNEDY STREET, NW

SPICER HB LLC SSL 3260-036 #5502 4TH STREET, NW

EMMANUEL A OJI SSL 3260-037 #5500 4TH STREET, NW

R.O.W.

60'X10' BUS PAD

EXISTING STREETCAR CATENARY POLE TO BE PAINTED

BUS SHELTER

ELSY AYALA SSL 3259-0030 #400 KENNEDY STREET, NW

JEAN M WILLIAMS SSL 3259-0035 #5348 4TH STREET, NW

SUN Y YANG SSL 3259-0048 #440 KENNEDY STREET, NW

BIRHANU BEDASO SSL 3259-0031 #422 KENNEDY STREET, NW

MAURA E ALVARENGA SSL 3259-0032 #418 KENNEDY STREET, NW

CHARLES F THOMPSON SSL 3259-0033 #414 KENNEDY STREET, NW

DONALD M BRODIE SSL 3259-0034 #410 KENNEDY STREET, NW

THE PROVIDENCE CONDOMINIUM SSL 3259-0039 #408 KENNEDY STREET, NW

MONICA R JONES SSL 3259-0040 #406 KENNEDY STREET, NW

JACKSON ERIC SSL 3259-0041 #404 KENNEDY STREET, NW

THE JASON CONDOMINIUMS SSL 3259-0041 #404 KENNEDY STREET, NW

PROPOSED RETAINING WALLS AND ORNAMENTAL FENCE

SYMBOL LEGEND

- EXISTING TREE TO REMAIN
- EXISTING TREE TO REMOVE
- PROPOSED TREE
- CONCRETE SIDEWALK
- VEHICULAR CONCRETE AREA
- PERMEABLE PAVER SIDEWALK
- BRICK SIDEWALK
- FLEXIBLE POROUS PAVEMENT
- EXISTING BUS SHELTER
- PROPOSED BUS SHELTER
- PROPOSED BENCH
- PROPOSED TRASH RECEPTACLE (LITTER BASKET)
- PROPOSED BIKE RACK (BIKE LOCKER)
- PROPOSED OBSERVATION WELL
- PROPOSED RAILING
- PEDESTRIAN WALKWAY AT DRIVEWAY/ALLEY
- R.O.W. RIGHT-OF-WAY LINE
- TREE BOX

GRAPHIC SCALE

20 10 0 20 40

1" = 20'-0" HORIZ.

LS-06

D.C. DEPARTMENT OF TRANSPORTATION
INFRASTRUCTURE PROJECT MANAGEMENT ADMINISTRATION
PROJECT MANAGEMENT DIVISION

KENNEDY STEET, N.W. IMPROVEMENT
FROM GEORGIA AVENUE TO NORTH CAPITOL STREET

LANDSCAPE PLAN – 6

PROJECT ENG. WZ
DESIGNED BY AYY
CHECKED BY MYH
DRAWN BY WZ/YZ
PROJECT MGR. AYY

DIVISION CHIEF

DATE

FILE

SHEET 45 OF 173

NO.	DESCRIPTION	NAME	DATE

REVISIONS

RHODESIDE & HARWELL
910 King Street
Suite 300
Alexandria, VA 22314
703-683-7447 ph
703-683-7448 fx
www.rhodeside-harwell.com
Landscape Architecture and Planning

Precision Systems, Inc.
Engineers, Planners and Architects
WASHINGTON, D.C.

p:\60570\landscape design\pLD-P006-KennedyStreetImprovement.dgn $PENTBLS$
Tuesday, July 28, 2015 AT 03:48 PM $PLTDRV$

REG	STATE	PROJECT	SHEET NO.	TOTAL SHEETS
3	D.C.	FAP No. STP-8888(480)	46	173

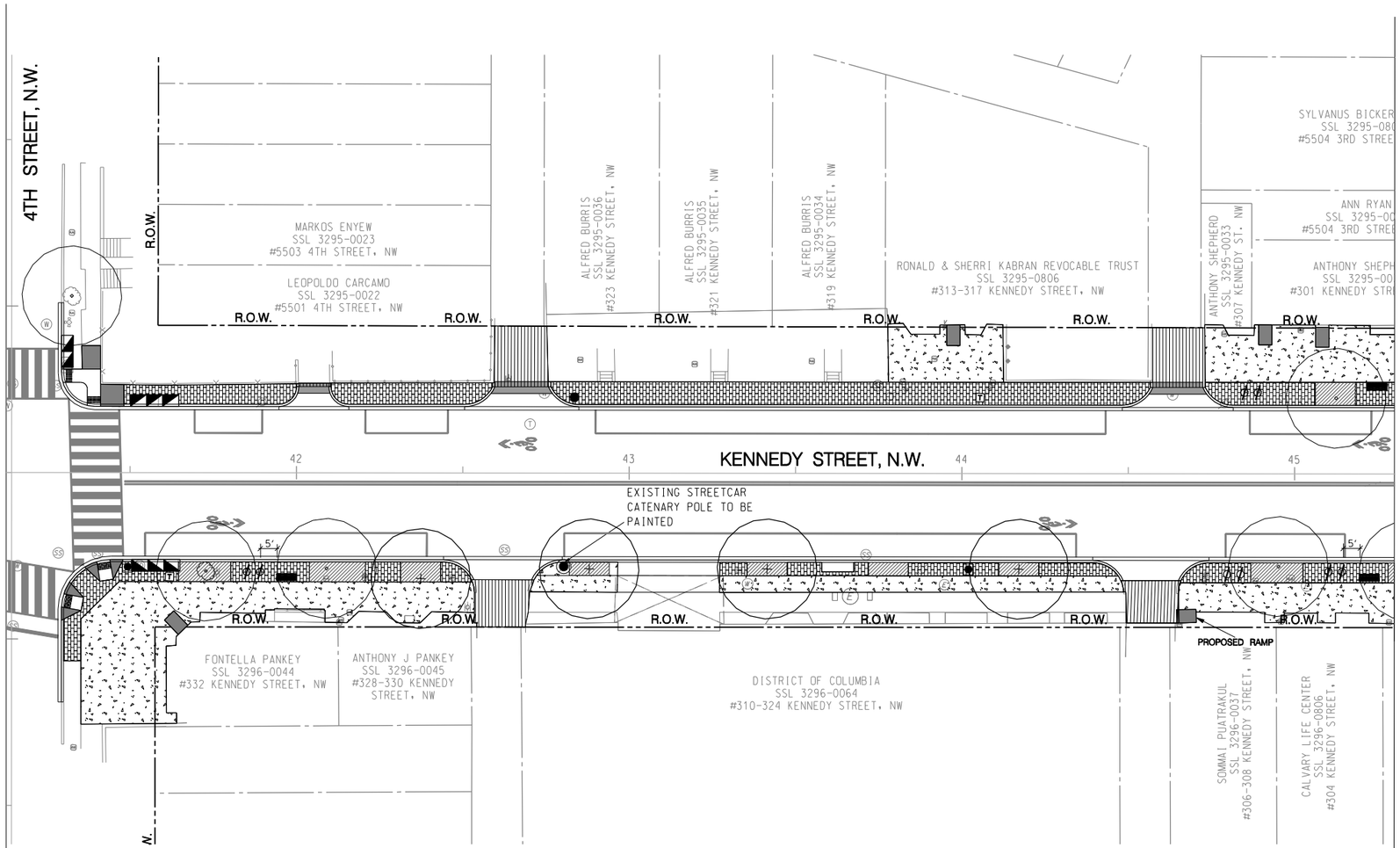

SYMBOL LEGEND

- EXISTING TREE TO REMAIN
- EXISTING TREE TO REMOVE
- PROPOSED TREE
- CONCRETE SIDEWALK
- VEHICULAR CONCRETE AREA
- PERMEABLE PAVER SIDEWALK
- BRICK SIDEWALK
- FLEXIBLE POROUS PAVEMENT
- EXISTING BUS SHELTER
- PROPOSED BUS SHELTER
- PROPOSED BENCH
- PROPOSED TRASH RECEPTACLE (LITTER BASKET)
- PROPOSED BIKE RACK (BIKE LOCKER)
- PROPOSED OBSERVATION WELL
- PROPOSED RAILING
- PEDESTRIAN WALKWAY AT DRIVEWAY/ALLEY
- R.O.W. RIGHT-OF-WAY LINE
- TREE BOX

GRAPHIC SCALE

20 10 0 20 40

1" = 20'-0" HORIZ.

N

LS-07

RHODESIDE & HARWELL
510 King Street
Suite 300
Alexandria, VA 22314
703-683-7447 ph
703-683-7449 fx
www.rhodeside-harwell.com
Landscape Architecture and Planning

Precision Systems, Inc.
Engineers, Planners and Architects
WASHINGTON, D.C.

NO	DESCRIPTION	NAME	DATE

REVISIONS

D.C. DEPARTMENT OF TRANSPORTATION
INFRASTRUCTURE PROJECT MANAGEMENT ADMINISTRATION
PROJECT MANAGEMENT DIVISION

KENNEDY STEET, N.W. IMPROVEMENT
FROM GEORGIA AVENUE TO NORTH CAPITOL STREET

LANDSCAPE PLAN – 7

PROJECT ENG. WZ
DESIGNED BY AYY
CHECKED BY MYH
DRAWN BY WZ/YZ
PROJECT MGR. AYY

DIVISION CHIEF
DATE
FILE
SHEET 46 OF 173

p:\60570\landscape design\pLD-P007-KennedyStreetImprovement.dgn $PENTBLS$
$PLTDRVS$
Tuesday, July 28, 2015 AT 03:48 PM

REG	STATE	PROJECT	SHEET NO.	TOTAL SHEETS
3	D.C.	FAP No. STP-8888(480)	47	173

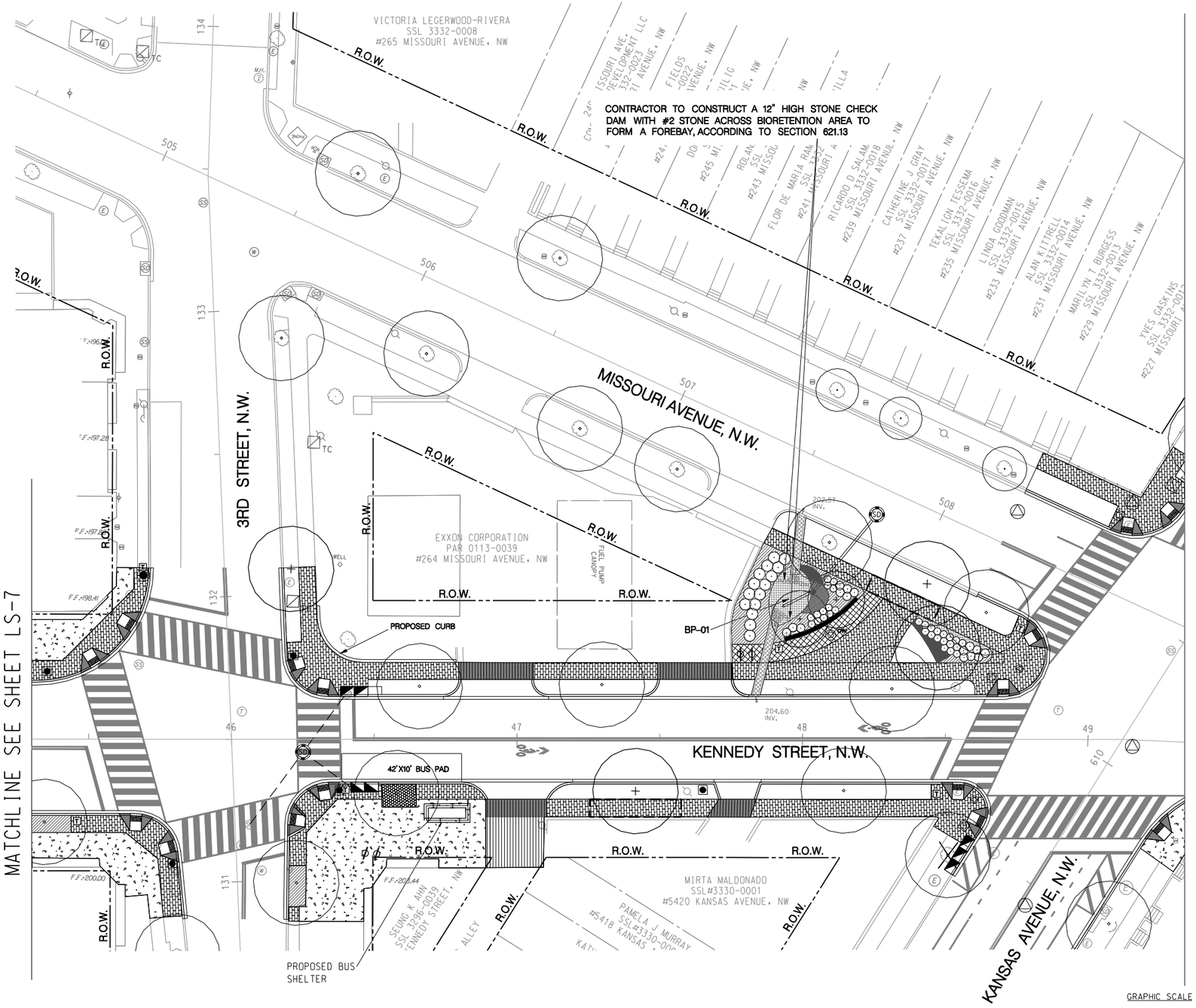

SYMBOL LEGEND

- EXISTING TREE TO REMAIN
- EXISTING TREE TO REMOVE
- PROPOSED TREE
- CONCRETE SIDEWALK
- VEHICULAR CONCRETE AREA
- PERMEABLE PAVER SIDEWALK
- BRICK SIDEWALK
- TREE BOX
- EXISTING BUS SHELTER
- PROPOSED BUS SHELTER
- PROPOSED BENCH
- PROPOSED TRASH RECEPTACLE (LITTER BASKET)
- PROPOSED BIKE RACK (BIKE LOCKER)
- PROPOSED OBSERVATION WELL
- PROPOSED RAILING
- PEDESTRIAN WALKWAY AT DRIVEWAY/ALLEY
- R.O.W. RIGHT-OF-WAY LINE

NOTE:

1. THE CONTRACTOR SHALL CONSTRUCT THE BIO-RETENTION FACILITIES AFTER ALL OTHER CONSTRUCTION WORK IS COMPLETED.
2. THE CONTRACTOR SHALL REFER TO DDOT GREEN INFRASTRUCTURE STANDARDS 2014 SECTION 621.09 FOR SPEC OF BIORETENTION SOIL.

GRAPHIC SCALE

20 10 0 20 40

1" = 20'-0" HORIZ.

LS-08

RHODESIDE & HARWELL
910 King Street
Suite 300
Alexandria, VA 22314
703-683-7447 ph
703-683-7448 fx
www.rhodeside-harwell.com
Landscape Architecture and Planning

Precision Systems, Inc.
Engineers, Planners and Architects
WASHINGTON, D.C.

NO.	DESCRIPTION	NAME	DATE

REVISIONS

D.C. DEPARTMENT OF TRANSPORTATION
INFRASTRUCTURE PROJECT MANAGEMENT ADMINISTRATION
PROJECT MANAGEMENT DIVISION

KENNEDY STEET, N.W. IMPROVEMENT
FROM GEORGIA AVENUE TO NORTH CAPITOL STREET

LANDSCAPE PLAN – 8

PROJECT ENG. WZ
DESIGNED BY AYY
CHECKED BY MYH
DRAWN BY WZ/YZ
PROJECT MGR. AYY

DIVISION CHIEF
DATE
FILE
SHEET 47 OF 173

p:\60570\landscape design\pLD-P008-kennedyStreetimprovement.dgn $PENTBLS$
Tuesday, July 28, 2015 AT 03:49 PM $PLTDRVS$

REG	STATE	PROJECT	SHEET NO.	TOTAL SHEETS
3	D.C.	FAP No. STP-8888(480)	48	173

MATCHLINE SEE SHEET LS-8

MATCHLINE SEE SHEET LS-10

CONTRACTOR TO CONSTRUCT A 6" HIGH STONE CHECK DAM WITH #2 STONE ACROSS BIORETENTION AREA TO FORM A FOREBAY, ACCORDING TO SECTION 621.13

CONTRACTOR TO CONSTRUCT A 12" HIGH STONE CHECK DAM WITH #2 STONE ACROSS BIORETENTION AREA TO FORM A FOREBAY, ACCORDING TO SECTION 621.13

KENNEDY STREET, N.W.

2ND STREET, N.W.

MISSOURI AVENUE, N.W.

BP-02

BP-03

RAIN GARDEN

ONE WAY

207.90 INV.

RELOCATE BUS SHELTER

60'X10' BUS PAD

60'X10' BUS PAD

PROPOSED BUS SHELTER

H.E. PARKER SSL# 3331-0042 #221 MISSOURI AVENUE, NW

THOMAS W BARBER SSL#3331-0043 #223 MISSOURI AVENUE, NW

#225

FABRIZIO 331-0041 Y STREET, NW

ILKIN-HYMAN 31-0040 STREET, NW

YANG 31-0039 STREET, NW

BAILEY 11-0038 STREET, NW

ORPORATED 1-0037 STREET, NW

IN ENTERPRISES LLC 3331-0036 #209 KENNEDY STREET, NW

EFRAIN VENTURA SSL# 3331-0035 #207 KENNEDY STREET, NW

GWENDOLYN F. SMITH SSL# 3331-0800 #207 KENNEDY STREET, NW

JACKSON 29-0805 AVENUE, NW

VARIABLE WIDTH PUBLIC ALLEY

CHRISTOPHER E EARLEY SSL# 3329-0019 #226 MISSOURI AVENUE

MELVIN L SCOTT SSL # 3329-0020 #224 MISSOURI AVENUE, NW

DOROTHY J HARRIS SSL # 3329-0021 #222 MISSOURI AVENUE, NW

RONALD H, L & E M NEWMAN SSL # 3329-0022 #220 MISSOURI AVENUE, NW

MARIBEL V GARCIA SSL # 3329-0034 #218 MISSOURI AVENUE, NW

GERALD A FAUNTROY SSL # 3329-0035 #216 MISSOURI AVENUE, NW

16' PUBLIC ALLEY

BARBARA J JACKSON SSL# 3329-0036 #5426 2ND STREET, NW

BIORETENTION POND ID	BOTTOM SURFACE AREA (SF)
BP-01	158
BP-02	60
BP-03	290

SYMBOL LEGEND

- EXISTING TREE TO REMAIN
- EXISTING TREE TO REMOVE
- PROPOSED TREE
- CONCRETE SIDEWALK
- VEHICULAR CONCRETE AREA
- PERMEABLE PAVER SIDEWALK
- BRICK SIDEWALK
- TREE BOX
- EXISTING BUS SHELTER
- PROPOSED BUS SHELTER
- PROPOSED BENCH
- PROPOSED TRASH RECEPTACLE (LITTER BASKET)
- PROPOSED BIKE RACK (BIKE LOCKER)
- PROPOSED OBSERVATION WELL
- PROPOSED RAILING
- PEDESTRIAN WALKWAY AT DRIVEWAY/ALLEY
- R.O.W. RIGHT-OF-WAY LINE

NOTE:

1. THE CONTRACTOR SHALL CONSTRUCT THE BIO-RETENTION FACILITIES AFTER ALL OTHER CONSTRUCTION WORK IS COMPLETED.
2. THE CONTRACTOR SHALL REFER TO DDOT GREEN INFRASTRUCTURE STANDARDS 2014 SECTION 621.09 FOR SPEC OF BIORETENTION SOIL.

GRAPHIC SCALE

20 10 0 20 40

1" = 20'-0" HORIZ.

LS-09

D.C. DEPARTMENT OF TRANSPORTATION
INFRASTRUCTURE PROJECT MANAGEMENT ADMINISTRATION
PROJECT MANAGEMENT DIVISION

KENNEDY STEET, N.W. IMPROVEMENT
FROM GEORGIA AVENUE TO NORTH CAPITOL STREET

PROJECT ENG. WZ
DESIGNED BY AYY
CHECKED BY MYH
DRAWN BY WZ/YZ
PROJECT MGR. AYY

LANDSCAPE PLAN – 9

DIVISION CHIEF
DATE
FILE
SHEET 48 OF 173

NO.	DESCRIPTION	NAME	DATE

REVISIONS

RHODESIDE & HARWELL
910 King Street
Suite 300
Alexandria, VA 22314
703-683-7447 ph
703-683-7448 fx
www.rhodeside-harwell.com
Landscape Architecture and Planning

Precision Systems, Inc.
Engineers, Planners and Architects
WASHINGTON, D.C.

p:\60570\landscape design\pLD-P009-KennedyStreetImprovement.dgn $PENTBLS$
Tuesday, July 28, 2015 AT 03:49 PM $PLTDRVS$

REG	STATE	PROJECT	SHEET NO.	TOTAL SHEETS
3	D.C.	FAP No. STP-8888(480)	49	173

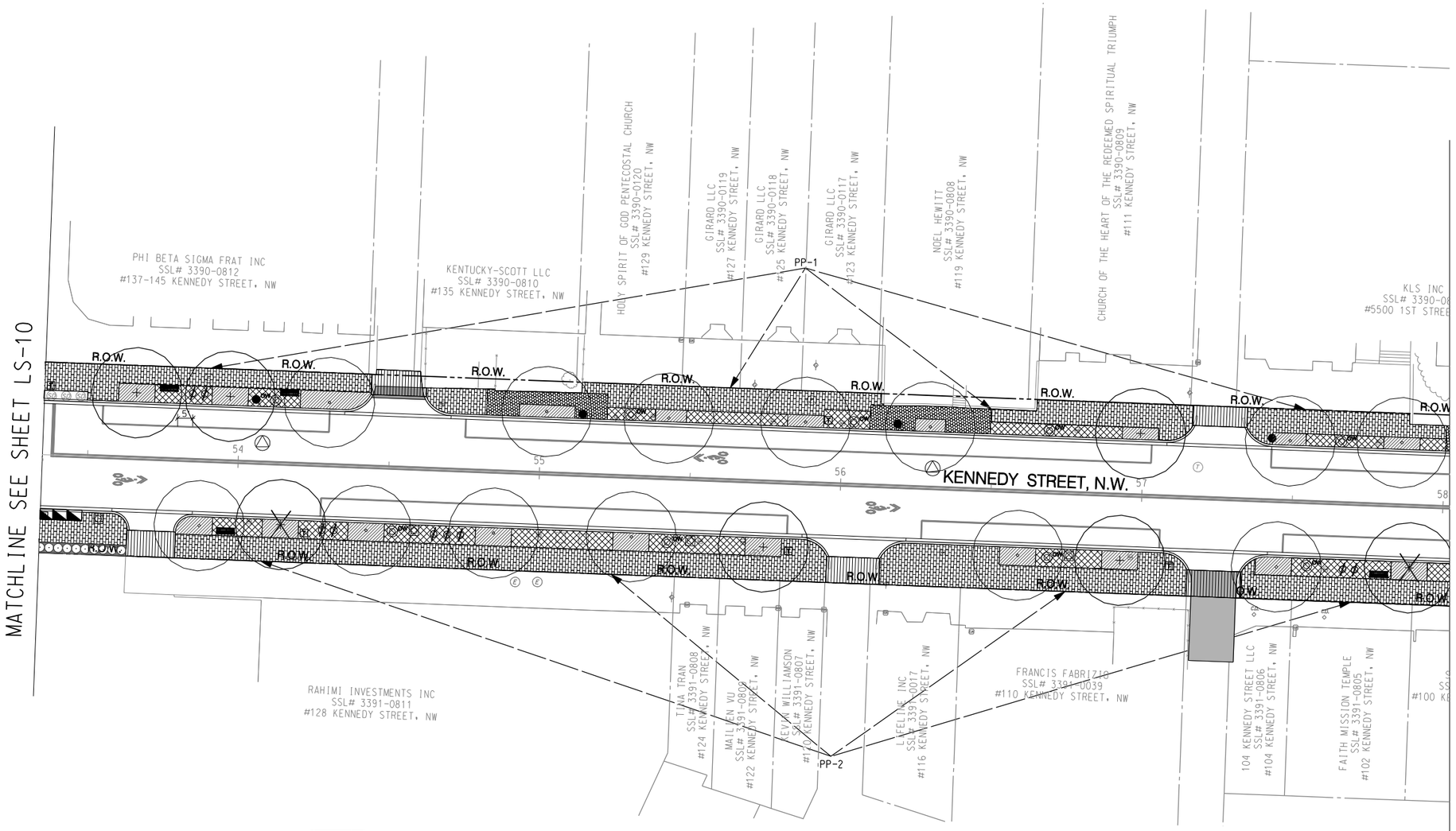

SYMBOL LEGEND

- EXISTING TREE TO REMAIN
- EXISTING TREE TO REMOVE
- PROPOSED TREE
- CONCRETE SIDEWALK
- VEHICULAR CONCRETE AREA
- PERMEABLE PAVER SIDEWALK
- BRICK SIDEWALK
- FLEXIBLE POROUS PAVEMENT
- EXISTING BUS SHELTER
- PROPOSED BUS SHELTER
- PROPOSED BENCH
- PROPOSED TRASH RECEPTACLE (LITTER BASKET)
- PROPOSED BIKE RACK (BIKE LOCKER)
- PROPOSED OBSERVATION WELL
- PROPOSED RAILING
- PEDESTRIAN WALKWAY AT DRIVEWAY/ALLEY
- R.O.W. RIGHT-OF-WAY LINE
- TREE BOX

GRAPHIC SCALE

20 10 0 20 40

1" = 20'-0" HORIZ.

RHODESIDE & HARWELL
910 King Street
Suite 300
Alexandria, VA 22314
703-683-7447 ph
703-683-7448 fx
www.rhodeside-harwell.com
Landscape Architecture and Planning

Precision Systems, Inc.
Engineers, Planners and Architects
WASHINGTON, D.C.

NO.	DESCRIPTION	NAME	DATE

REVISIONS

LS-10

D.C. DEPARTMENT OF TRANSPORTATION
INFRASTRUCTURE PROJECT MANAGEMENT ADMINISTRATION
PROJECT MANAGEMENT DIVISION

KENNEDY STEET, N.W. IMPROVEMENT
FROM GEORGIA AVENUE TO NORTH CAPITOL STREET

PROJECT ENG. WZ
DESIGNED BY AYY
CHECKED BY MYH
DRAWN BY WZ/YZ
PROJECT MGR. AYY

LANDSCAPE PLAN – 10

DIVISION CHIEF
DATE
FILE
SHEET 49 OF 173

p:\60570\landscape design\pLD-P010-KennedyStreetImprovement.dgn $PENTBLS$
Tuesday, July 28, 2015 AT 03:50 PM $PLTDRVS$

REG	STATE	PROJECT	SHEET NO.	TOTAL SHEETS
3	D.C.	FAP No. STP-8888(480)	50	173

MATCHLINE SEE SHEET LS-10

MATCHLINE SEE SHEET LS-12

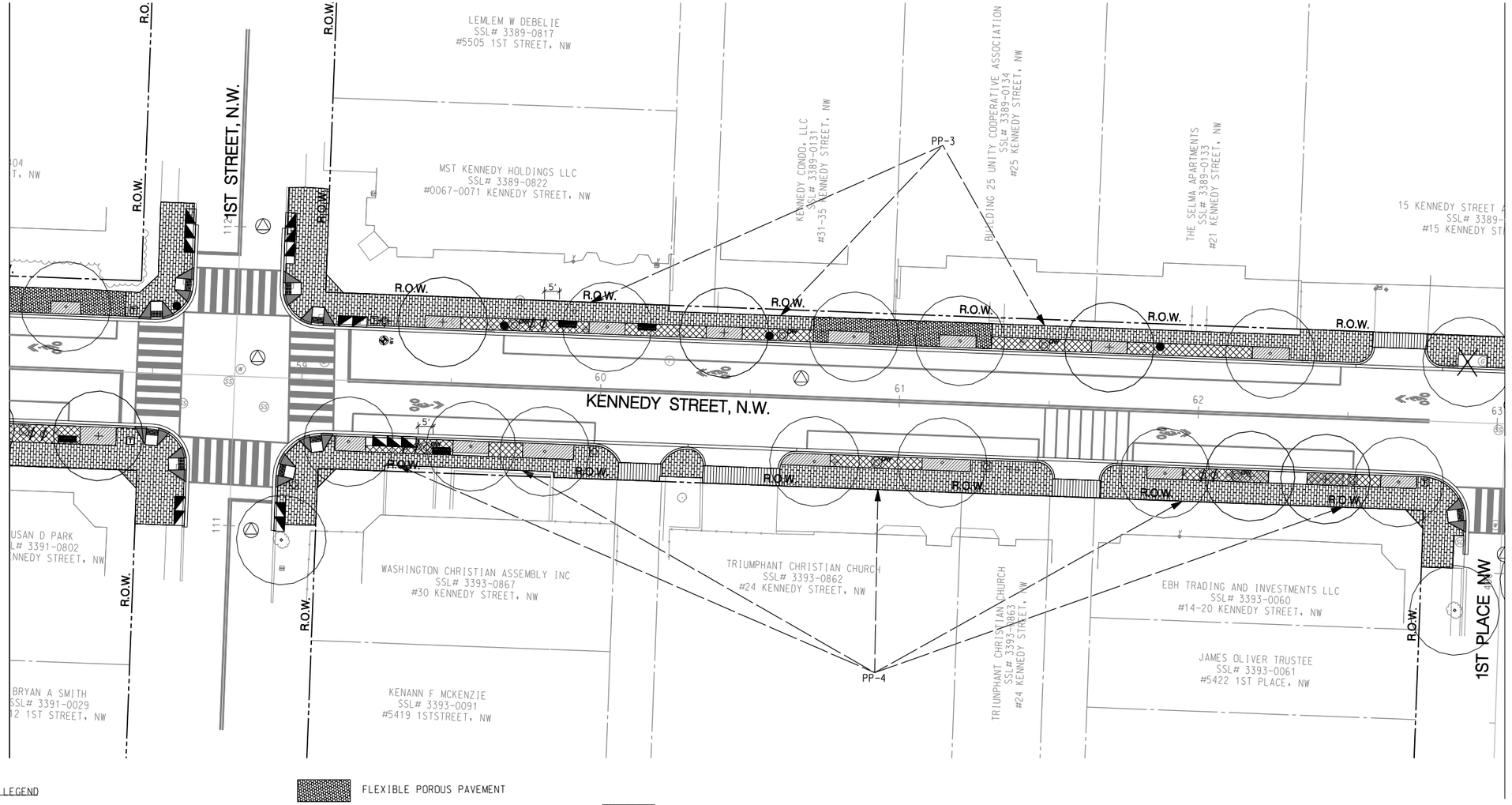

SYMBOL LEGEND

- EXISTING TREE TO REMAIN
- EXISTING TREE TO REMOVE
- PROPOSED TREE
- CONCRETE SIDEWALK
- VEHICULAR CONCRETE AREA
- PERMEABLE PAVER SIDEWALK
- BRICK SIDEWALK
- FLEXIBLE POROUS PAVEMENT
- EXISTING BUS SHELTER
- PROPOSED BUS SHELTER
- PROPOSED BENCH
- PROPOSED TRASH RECEPTACLE (LITTER BASKET)
- PROPOSED BIKE RACK (BIKE LOCKER)
- PROPOSED OBSERVATION WELL
- PROPOSED RAILING
- PEDESTRIAN WALKWAY AT DRIVEWAY/ALLEY
- R.O.W. RIGHT-OF-WAY LINE
- TREE BOX

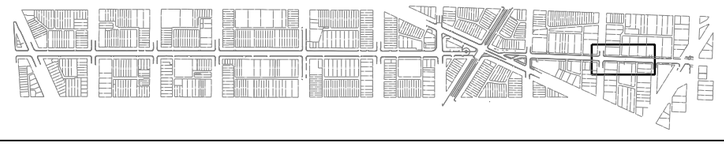

N

GRAPHIC SCALE

20 10 0 20 40

1" = 20'-0" HORIZ.

LS-11

D.C. DEPARTMENT OF TRANSPORTATION
INFRASTRUCTURE PROJECT MANAGEMENT ADMINISTRATION
PROJECT MANAGEMENT DIVISION

KENNEDY STEET, N.W. IMPROVEMENT
FROM GEORGIA AVENUE TO NORTH CAPITOL STREET

PROJECT ENG. WZ
DESIGNED BY AYY
CHECKED BY MYH
DRAWN BY WZ/YZ
PROJECT MGR. AYY

LANDSCAPE PLAN – 11

DIVISION CHIEF
DATE
FILE
SHEET 50 OF 173

NO	DESCRIPTION	NAME	DATE

REVISIONS

RHODESIDE & HARWELL
810 King Street
Suite 300
Alexandria, VA 22314
703-683-7447 ph
703-683-7449 fx
www.rhodeside-harwell.com
Landscape Architecture and Planning

Precision Systems, Inc.
Engineers, Planners and Architects
WASHINGTON, D.C.

p:\60570\landscape design\pLD-P01i-KennedyStreetImprovement.dgn $PENTBL$
Tuesday, July 28, 2015 AT 03:50 PM $PLTDRV$

REG	STATE	PROJECT	SHEET NO.	TOTAL SHEETS
3	D.C.	FAP No. STP-8888(480)	51	173

MATCHLINE SEE SHEET LS-11

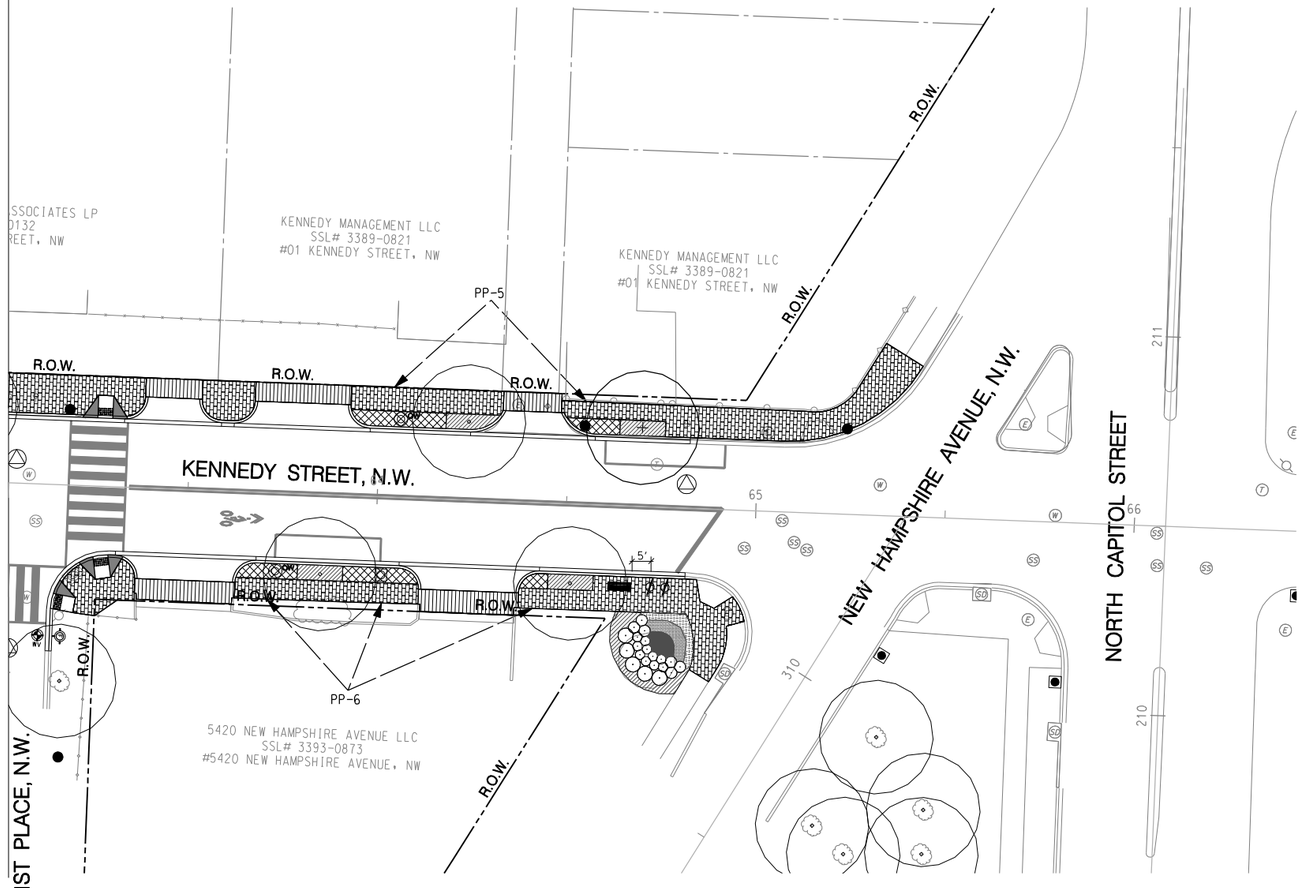

SYMBOL LEGEND

- EXISTING TREE TO REMAIN
- EXISTING TREE TO REMOVE
- PROPOSED TREE
- CONCRETE SIDEWALK
- VEHICULAR CONCRETE AREA
- PERMEABLE PAVER SIDEWALK
- BRICK SIDEWALK
- FLEXIBLE POROUS PAVEMENT
- EXISTING BUS SHELTER
- PROPOSED BUS SHELTER
- PROPOSED BENCH
- PROPOSED TRASH RECEPTACLE (LITTER BASKET)
- PROPOSED BIKE RACK (BIKE LOCKER)
- PROPOSED OBSERVATION WELL
- PROPOSED RAILING
- PEDESTRIAN WALKWAY AT DRIVEWAY/ALLEY
- R.O.W. RIGHT-OF-WAY LINE
- TREE BOX

N

GRAPHIC SCALE

20 10 0 20 40

1" = 20'-0" HORIZ.

LS-12

D.C. DEPARTMENT OF TRANSPORTATION
INFRASTRUCTURE PROJECT MANAGEMENT ADMINISTRATION
PROJECT MANAGEMENT DIVISION

KENNEDY STEET, N.W. IMPROVEMENT
FROM GEORGIA AVENUE TO NORTH CAPITOL STREET

PROJECT ENG. WZ
DESIGNED BY AYY
CHECKED BY MYH
DRAWN BY WZ/YZ
PROJECT MGR. AYY

LANDSCAPE PLAN – 12

DIVISION CHIEF
DATE
FILE
SHEET 51 OF 173

NO.	DESCRIPTION	NAME	DATE

REVISIONS

RHODESIDE & HARWELL
910 King Street
Suite 300
Alexandria, VA 22314
703-683-7447 ph
703-683-7448 fx
www.rhodeside-harwell.com
Landscape Architecture and Planning

Precision Systems, Inc.
Engineers, Planners and Architects
WASHINGTON, D.C.

p:\60570\landscape design\pLD-P012-KennedyStreetImprovement.dgn $PENTBLS$
Tuesday, July 28, 2015 AT 03:51 PM $PLTDRV$

REG	STATE	PROJECT	SHEET NO.	TOTAL SHEETS
3	D.C.	FAP No. STP-8888(480)	52	173

LAYOUT PLAN

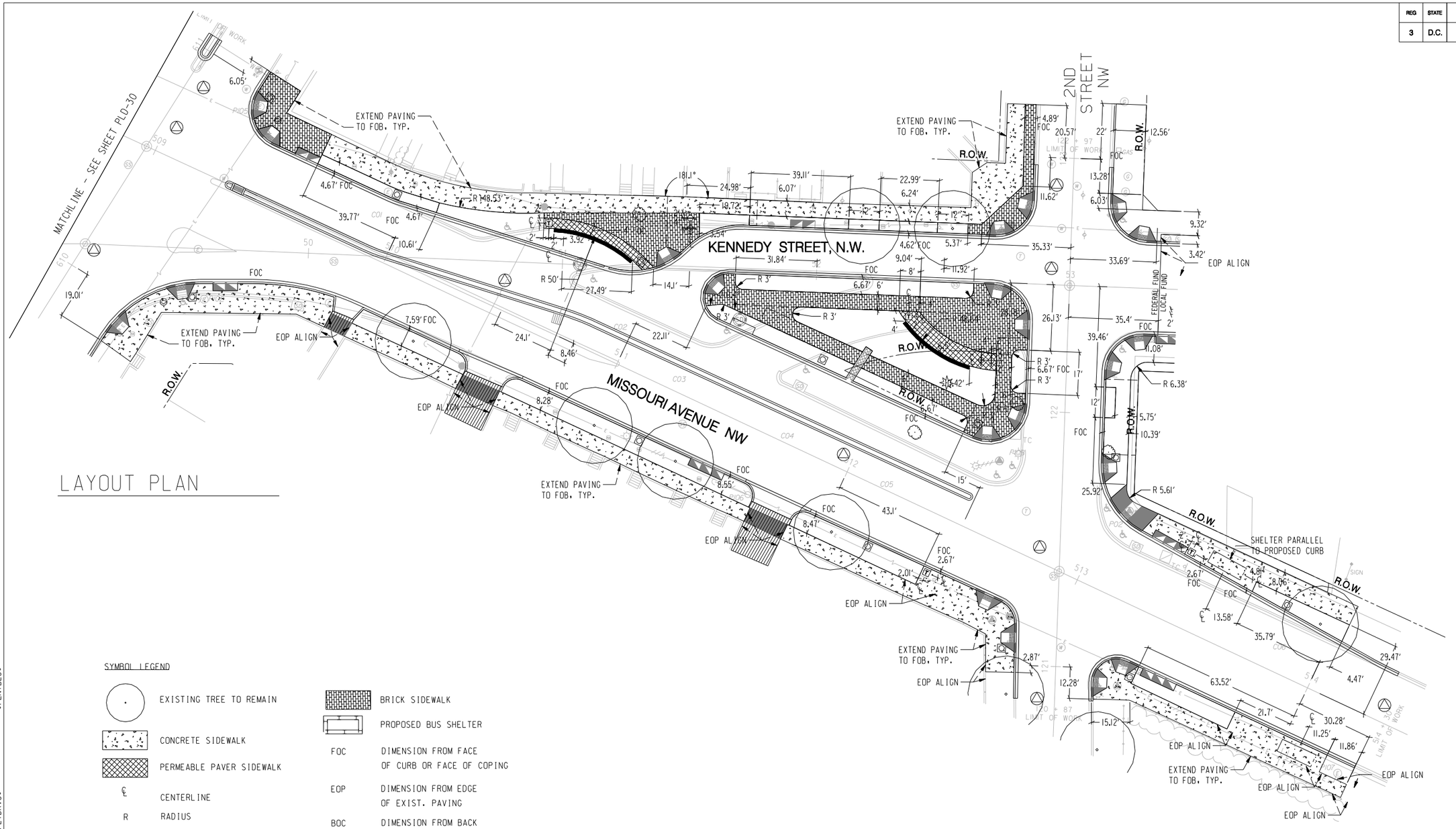

SYMBOL LEGEND

	EXISTING TREE TO REMAIN
	CONCRETE SIDEWALK
	PERMEABLE PAVER SIDEWALK
℄	CENTERLINE
R	RADIUS
	BRICK SIDEWALK
	PROPOSED BUS SHELTER
FOC	DIMENSION FROM FACE OF CURB OR FACE OF COPING
EOP	DIMENSION FROM EDGE OF EXIST. PAVING
BOC	DIMENSION FROM BACK OF CURB OR BACK OF COPING
FOB	FACE OF EXISTING BUILDING, WALL OR STEP

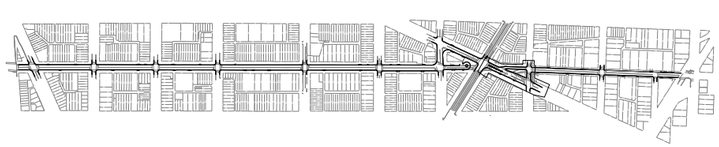

GRAPHIC SCALE

20 10 0 20 40

1" = 20'-0" HORIZ.

LS-13

D.C. DEPARTMENT OF TRANSPORTATION
INFRASTRUCTURE PROJECT MANAGEMENT ADMINISTRATION
PROJECT MANAGEMENT DIVISION

KENNEDY STEET, N.W. IMPROVEMENT
FROM GEORGIA AVENUE TO NORTH CAPITOL STREET

LANDSCAPE ALIGNMENT & LAYOUT PLAN 1

PROJECT ENG. ____
DESIGNED BY RM
CHECKED BY RMKF
DRAWN BY RM/GRKS
PROJECT MGR. RM

DIVISION CHIEF
DATE ____
FILE PLD-P013-KennedyStreetImprovement
SHEET 52 OF 173

RHODESIDE & HARWELL
916 King Street
Suite 200
Alexandria, VA 22314
703-683-7447 ph
703-683-7449 fx
www.rhodeside-harwell.com
Landscape Architecture and Planning

Precision Systems, Inc.
Engineers, Planners and Architects
WASHINGTON, D.C.

NO	DESCRIPTION	NAME	DATE

REVISIONS

p:\60570\RH\pLD-P013-KennedyStreetImprovement.dgn $PENTBLS$ $PLTDRVS$
Tuesday, July 28, 2015 AT 03:54 PM

REG	STATE	PROJECT	SHEET NO.	TOTAL SHEETS
3	D.C.	FAP No. STP-8888(480)	53	173

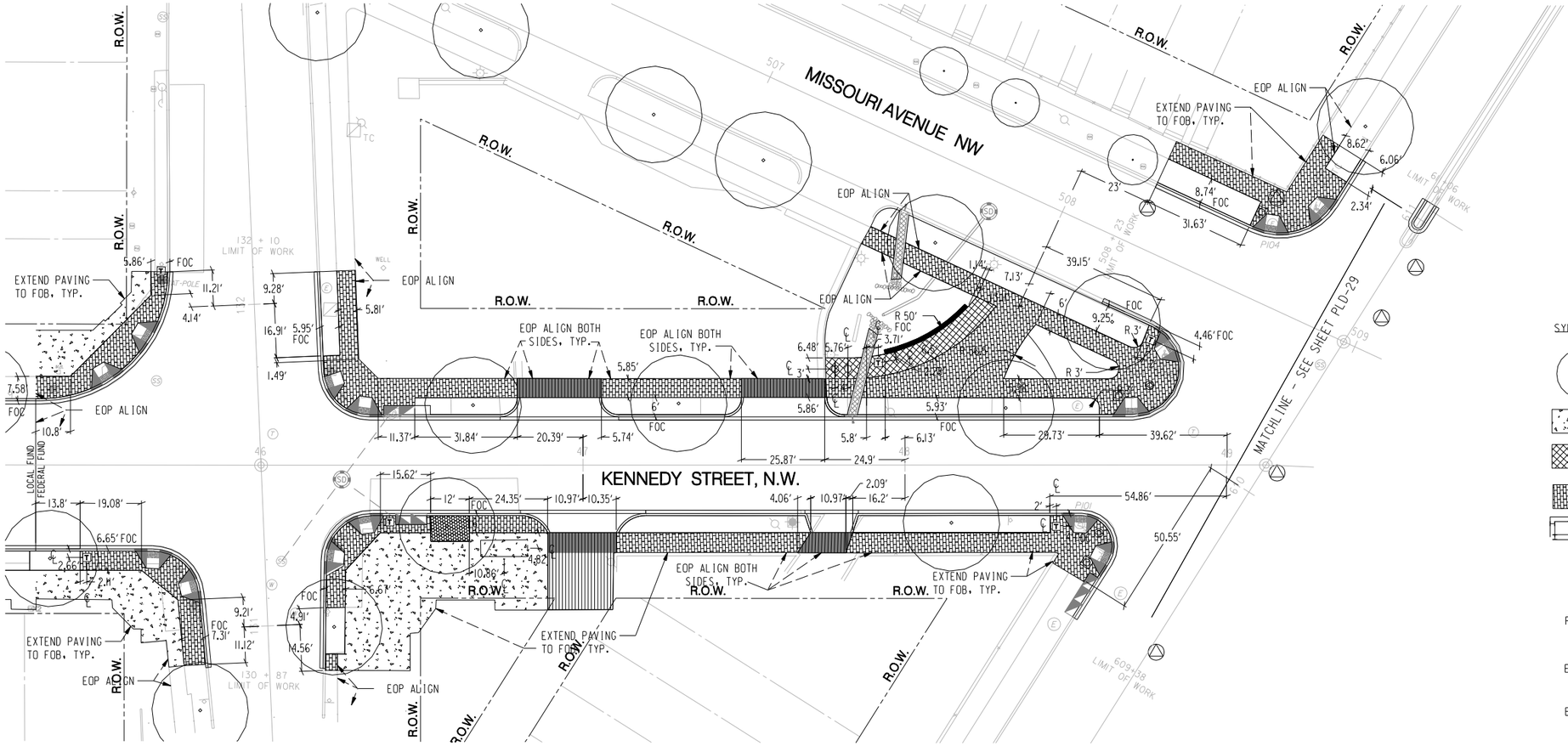

LAYOUT PLAN

SYMBOL LEGEND

- EXISTING TREE TO REMAIN
- CONCRETE SIDEWALK
- PERMEABLE PAVER SIDEWALK
- BRICK SIDEWALK
- PROPOSED BUS SHELTER
- ℄ CENTERLINE
- R RADIUS
- FOC DIMENSION FROM FACE OF CURB OR FACE OF COPING
- EOP DIMENSION FROM EDGE OF EXIST. PAVING
- BOC DIMENSION FROM BACK OF CURB OR BACK OF COPING
- FOB FACE OF EXISTING BUILDING, WALL OR STEP

N

GRAPHIC SCALE

20 10 0 20 40

1" = 20'-0" HORIZ.

LS-14

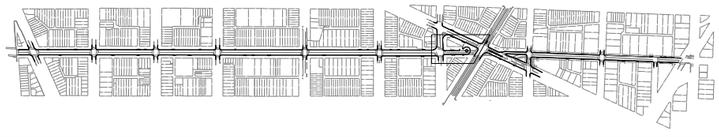

RHODESIDE & HARWELL
Landscape Architecture and Planning

Precision Systems, Inc.
Engineers, Planners and Architects
WASHINGTON, D.C.

NO	DESCRIPTION	NAME	DATE

REVISIONS

D.C. DEPARTMENT OF TRANSPORTATION
INFRASTRUCTURE PROJECT MANAGEMENT ADMINISTRATION
PROJECT MANAGEMENT DIVISION

KENNEDY STEET, N.W. IMPROVEMENT
FROM GEORGIA AVENUE TO NORTH CAPITOL STREET

PROJECT ENG. ____
DESIGNED BY RM
CHECKED BY RMKF
DRAWN BY RMGRMS
PROJECT MGR. RM

LANDSCAPE ALIGNMENT & LAYOUT PLAN 2

DIVISION CHIEF
DATE ____
FILE PLD-P0128-KennedyStreetImprovement
SHEET 53 OF 173

p:\60570\RHI\pLD-P014-KennedyStreetImprovement.dgn $PENTBLS$ $PLTDRVS$
Tuesday, July 28, 2015 AT 03:53 PM

REG	STATE	PROJECT	SHEET NO.	TOTAL SHEETS
3	D.C.	FAP No. STP-8888(480)	54	173

Trash receptacles shall be wrought iron frame and electrostatically powder coated, with riveted steel lid and hinged door. Each receptacle shall be furnished with a hinged door fitted with a latch.

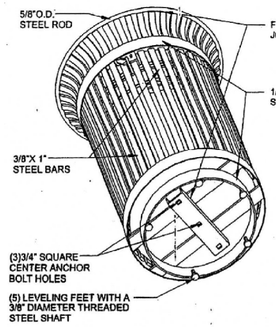

BOTTOM VIEW

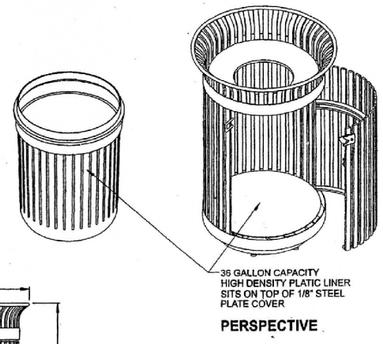

PERSPECTIVE

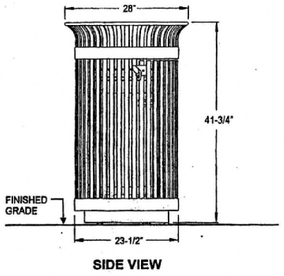

SIDE VIEW

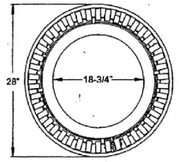

TOP VIEW

LITTER BASKET
NOT TO SCALE

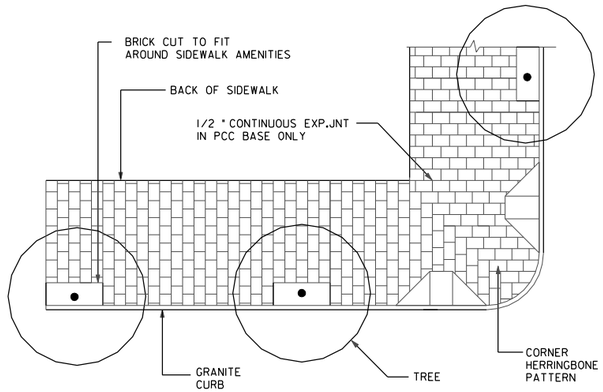

SIDEWALK PLAN

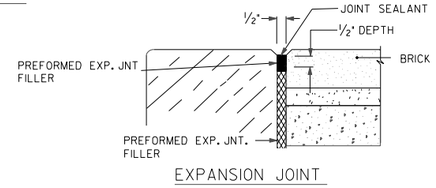

EXPANSION JOINT

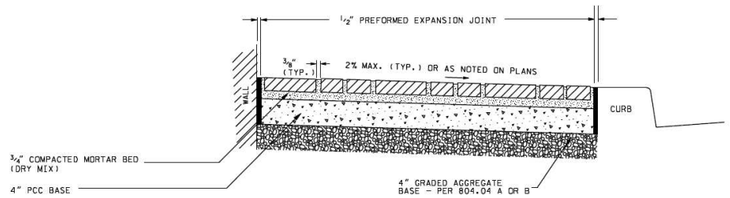

BRICK ON 4" PCC BASE - SECTION

BRICK SIDEWALK ON PCC BASE

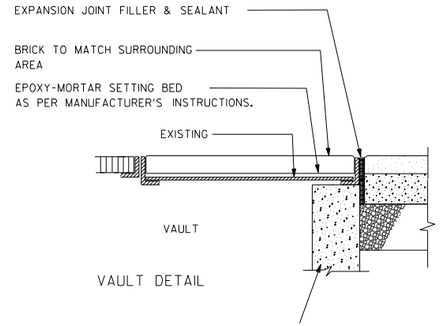

VAULT DETAIL

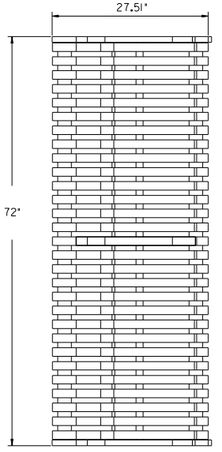

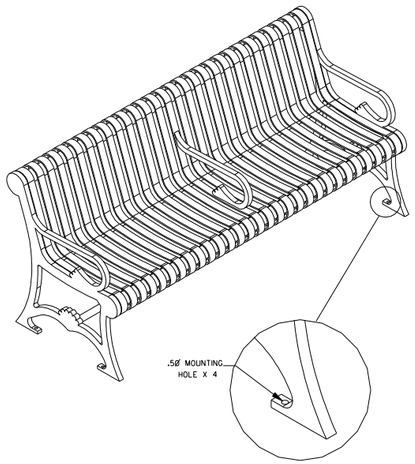

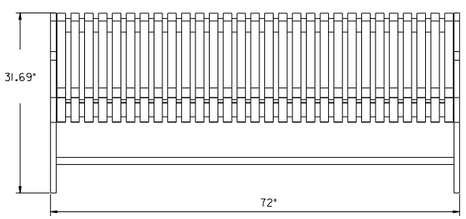

BENCH
NOT TO SCALE

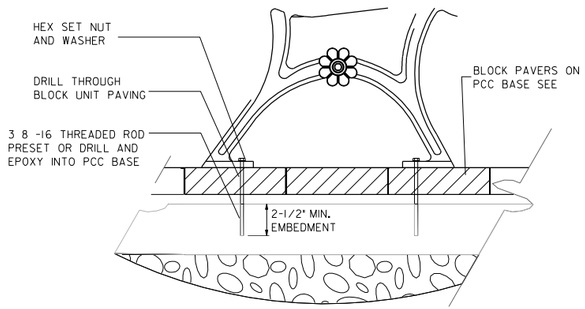

BENCH MOUNTING DETAIL

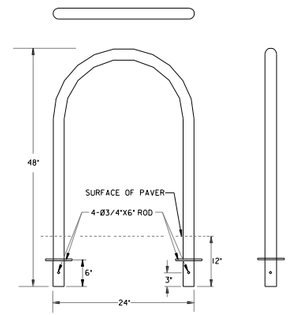

BIKE RACK

NOTE:
1. MATERIAL:
2" SCHED 40 PIPE (2.375"OD X 0.154" WALL) GALVANIZED, COATED WITH PVC AND BLACK IN COLOR.
2. REMOVE ALL BUTTS AND BREAK ALL SHARP EDGES

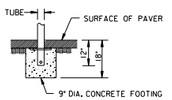

BIKE RACK ANCHORING DETAIL
AS SHOWN OR PER MANUFACTURER'S RECOMMENDATION

LS-15

D.C. DEPARTMENT OF TRANSPORTATION
INFRASTRUCTURE PROJECT MANAGEMENT ADMINISTRATION
PROJECT MANAGEMENT DIVISION

KENNEDY STEET, N.W. IMPROVEMENT
FROM GEORGIA AVENUE TO NORTH CAPITOL STREET

LANDSCAPE DETAILS – 1

PROJECT ENG. WZ
DESIGNED BY AYY
CHECKED BY MYH
DRAWN BY WZ/YZ
PROJECT MGR. AYY

DIVISION CHIEF
DATE
FILE
SHEET 54 OF 173

RHODESIDE & HARWELL
510 King Street
Suite 303
Alexandria, VA 22314
703-683-7447 ph
703-683-7449 fx
www.rhodeside-harwell.com
Landscape Architecture and Planning

Precision Systems, Inc.
Engineers, Planners and Architects
WASHINGTON, D.C.

NO	DESCRIPTION	NAME	DATE

REVISIONS

p:\60570\landscape design\DLD-P015-KennedyStreetImprovement.dgn $PENTBLS$
Tuesday, July 28, 2015 AT 03:51 PM $PLTDRVS$

REG	STATE	PROJECT	SHEET NO.	TOTAL SHEETS
3	D.C.	FAP No. STP-8888(480)	55	173

STATEMENT BY PROFESSIONAL ENGINEER REGISTERED IN THE DISTRICT OF COLUMBIA

This is to certify that the engineering features of all stormwater best management practices (BMPs), stormwater infrastructure, and land covers (collectively the "Facility") have been designed/examined by me and found to be in conformity with modern engineering principles applicable to the treatment and disposal of stormwater pollutants. I further certify that the Facility has been designed in accordance with the specification required under Chapter 5 of Title 21 of the District of Columbia Municipal Regulations. It is also stated that the undersigned has furnished the applicant with a set of instructions for the maintenance and operation of the site's Facility.

Yonglong Yang, P.E.
Name and Title (please type)

Precision Systems, Inc.
Address
2713 Newlands Street, N.W. Washington DC 20015

Date 07/01/2015 Phone No: 202-686-8225

Affix Seal:

DISTRICT OF COLUMBIA
YONGLIANG YANG
No. PE901731
07/21/15
LICENSED (CIVIL)
PROFESSIONAL ENGINEER

STATEMENT BY PERSON RESPONSIBLE FOR MAINTENANCE

The undersigned agrees to maintain and operate the stormwater best management practices (BMPs), stormwater infrastructure, and land covers in such a manner as to comply with the provisions of Chapter 5 of Title 21 of the District of Columbia Municipal Regulations (DCMR).

Responsibility for maintenance and operation may be transferred to another entity upon written notice to the Watershed Protection Division of the District Department of the Environment from the undersigned and the entity assuming responsibility. This notice must certify that the transfer of responsibility for maintenance and operation is in compliance with 21 DCMR Chapter 5.

Muhammed Khalid
Signature of the person responsible for maintenance (it may be the applicant)

Muhammed Khalid, Interim Chief Engineer
Name and Title (please type)

55 M Street, S.E.
Address
Washington, DC 20003

Date 7/14/15 Phone No: 202-671-4577

AS-BUILT CERTIFICATION BY PROFESSIONAL ENGINEER

Within 21 days after completion of construction of all stormwater best management practices (BMPs), stormwater infrastructure, and land covers (collectively the "Facility"), please send this page to the Watershed Protection Division of the District Department of the Environment.

1. ***Facility information:***

Source Name: _____

Source Location: Street: _____

City: _____

DCRA Permit No.: _____

Date Issued: _____

2. ***As Built Certification***

I hereby certify that all stormwater best management practices (BMPs), stormwater infrastructure, and land covers have been built substantially in accordance with the approved plans and specifications and that any deviations noted below will not prevent the system from functioning in compliance with the requirements Chapter 5 of Title 21 of the District of Columbia Municipal Regulations when properly maintained and operated. These determinations have been based upon on-site observation of construction, scheduled and conducted by me or by a project representative under my direct supervision. I have enclosed one set of as-built engineering drawings.

Signature of Engineer

Name (Please Type) D.C. Reg. No.

Affix Seal:

Company Name

Company Address

Date: _____ Phone No.: _____

Substantial deviations from the approved plans and specifications (attach additional sheets if required).

_____

_____

_____

_____

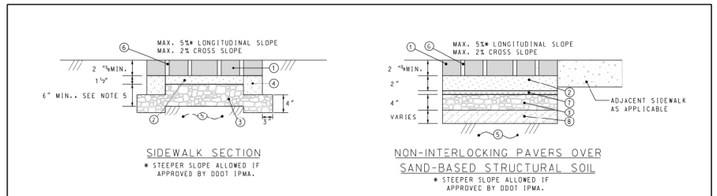

SIDEWALK SECTION

* STEEPER SLOPE ALLOWED IF APPROVED BY DDOT IPMA.

NON-INTERLOCKING PAVERS OVER SAND-BASED STRUCTURAL SOIL

* STEEPER SLOPE ALLOWED IF APPROVED BY DDOT IPMA.

LEGEND

1. PERMEABLE INTERLOCKING CONCRETE PAVERS (PICP) OR SIMILAR, OR NON-INTERLOCKING PAVERS, AS NOTED.
2. BEDDING LAYER, AASHTO #8 OR APPROVED EQUIVALENT
3. DOUBLE WASHED AGGREGATE, AASHTO #57 OR APPROVED EQUIVALENT
4. CONCRETE EDGE RESTRAINT, MIN. 4" WIDE AND 7½" DEEP; MORTAR OR POLYMER ADHERED PAVERS TO TOP; ALTERNATIVELY, EXTEND EDGE RESTRAINT TO SURFACE. OTHER TYPES OF EDGE RESTRAINTS SUCH AS STEEL OR PLASTIC SHALL BE ALLOWED AS APPROVED BY THE ENGINEER AND BASED ON MANUFACTURER'S RECOMMENDATIONS.
5. UNCOMPACTED SUBGRADE FOR AREAS DESIGNED FOR INFILTRATION PRACTICES. FOR OTHER AREAS, COMPACT AS SPECIFIED IN SPECIFICATION CITED IN NOTE 2. FOR SOFT SOILS, INSTALL GEOGRID PER GEOTECHNICAL ENGINEER RECOMMENDATIONS. SEE NOTE 8 FOR ALTERNATE DESIGN.
6. JOINT TO HAVE 1/2 INCH MAXIMUM GAP IN ACCORDANCE WITH THE LATEST ADA REQUIREMENTS AND TO BE FILLED WITH AASHTO #8 OR APPROVED EQUIVALENT. MINIMUM GAP SHALL BE 1/4" OR PER MANUFACTURERS RECOMMENDATIONS FOR INTERLOCKING CONCRETE PAVERS.
7. GEOGRID, AS APPROVED BY DDOT
8. SAND-BASED STRUCTURAL SOIL (SBSS)

NOTES:

1. DETAIL TO BE USED ONLY WHEN APPROVED BY DDOT IPMA AND SHALL MEET CURRENT APPROVED DDOT SPECIFICATION FOR "PERMEABLE UNIT PAVERS".
2. AGGREGATE LAYERS SHALL MEET CURRENT APPROVED DDOT SPECIFICATION FOR "AGGREGATES FOR PERMEABLE PAVEMENT AND BIORETENTION".
3. WHERE INSITU SOILS ARE NOT CONDUCIVE TO INFILTRATION OF 1.2" OF RETENTION VOLUME WITHIN 72 HOURS, UNDERDRAINS SHOULD BE CONSIDERED THROUGH COORDINATION WITH DDOT IPMA.
4. WATERPROOF MEMBRANE TO BE USED TO PROMOTE WATER RE-USE, PROTECT NEARBY BUILDING FOUNDATIONS AND AVOID INFILTRATION AROUND UTILITIES. SEE DESIGN PLANS.
5. AGGREGATE DEPTH MAY BE GREATER THAN MINIMUM, AS SHOWN IN DESIGN PLANS TO ACHIEVE ADDITIONAL STORMWATER STORAGE.
6. BOTTOM OF PERMEABLE PAVEMENT STRUCTURE SHALL BE AT LEAST 2' ABOVE THE SEASONAL HIGH WATER TABLE OR TO BEDROCK, AS DETERMINED BY GEOTECHNICAL INVESTIGATION.
7. TOP OF PAVEMENT SHOULD BE DESIGNED TO ACHIEVE 1% MINIMUM SLOPE IN ANY DIRECTION.
8. IN AREAS OF TREE PLANTINGS WHICH CALL FOR SAND-BASED STRUCTURAL SOIL (SSBS), THE SBSS MAY EXTEND UNDER THE AGGREGATE BASE LAYER OF THE SIDEWALK.

DATE	APPR.
REVISED	
ISSUED:	
REFERENCE	

RECOMMENDED: DEPUTY CHIEF ENGINEER

APPROVED: CHIEF TRANSPORTATION ENGINEER

PERMEABLE PAVER SIDEWALK

DISTRICT OF COLUMBIA
DEPARTMENT OF TRANSPORTATION

DWG. NO. 621.06

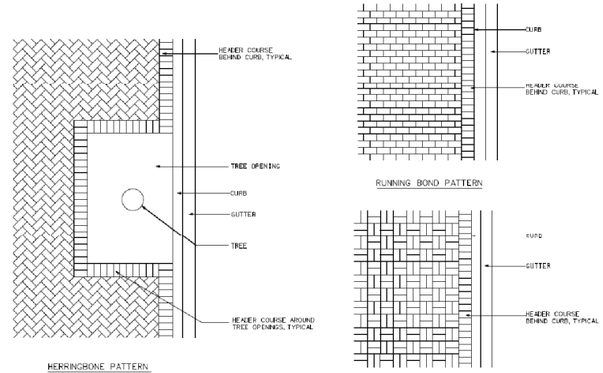

HERRINGBONE PATTERN

RUNNING BOND PATTERN

BASKET WEAVE PATTERN

NOTES:
1. REFER TO DWG. NO. 608.04 FOR BRICK SETTING BED.
2. REFER TO CHAPTER 31 IN DESIGN AND ENGINEERING MANUAL FOR MORE INFORMATION.

DATE	APPR.
REVISED	
ISSUED:	
REFERENCE	

RECOMMENDED: PROJECT MANAGER

APPROVED: CHIEF TRANSPORTATION ENGINEER

PATTERNS FOR BRICK SIDEWALK

DISTRICT OF COLUMBIA
DEPARTMENT OF TRANSPORTATION

DWG. NO. 605.05

NOTES:
1. OPERATIONS SHALL BE CONDUCTED SO AS TO AVOID INJURY TO TREE TRUNKS, BRANCHES, AND ROOTS. EXCAVATIONS WITHIN LIMITS OF TREE ROOT SPREAD SHALL PROCEED WITH CARE EITHER BY USE OF HAND TOOLS OR WITH EQUIPMENT THAT WILL NOT CAUSE TREE ROOT DAMAGE.
2. REFER TO DDOT STANDARD SPECIFICATIONS, SECTION 608.08, TREE ROOT PROTECTION, AND TREE PROTECTION NOTES ON DDOT STANDARD DWG. NO. 608.10.
3. POROUS FLEXIBLE PAVEMENT MATERIALS AND INSTALLATION SHALL BE PER DDOT GREEN INFRASTRUCTURE STANDARDS, SECTION 621.07-POROUS FLEXIBLE PAVEMENT.

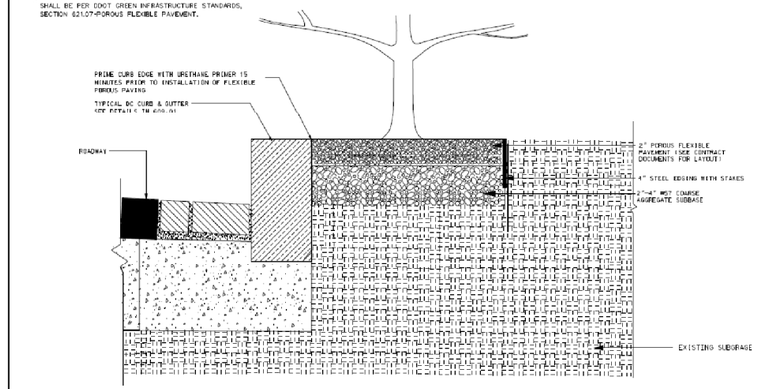

DATE	APPR.
REVISED	
ISSUED:	
REFERENCE	

RECOMMENDED: PROJECT MANAGER

APPROVED: CHIEF TRANSPORTATION ENGINEER

POROUS FLEXIBLE PAVEMENT - IN-GRADE

DISTRICT OF COLUMBIA
DEPARTMENT OF TRANSPORTATION

DWG. NO. 621.07

NOTES:
1. OPERATIONS SHALL BE CONDUCTED SO AS TO AVOID INJURY TO TREE TRUNKS, BRANCHES, AND ROOTS. EXCAVATIONS WITHIN LIMITS OF TREE ROOT SPREAD SHALL PROCEED WITH CARE EITHER BY USE OF HAND TOOLS OR WITH EQUIPMENT THAT WILL NOT CAUSE TREE ROOT DAMAGE.
2. REFER TO DDOT STANDARD SPECIFICATIONS, SECTION 608.08, TREE ROOT PROTECTION, AND TREE PROTECTION NOTES ON DDOT STANDARD DWG. NO. 608.10.
3. POROUS FLEXIBLE PAVEMENT MATERIALS AND INSTALLATION SHALL BE PER DDOT GREEN INFRASTRUCTURE STANDARDS, SECTION 621.07-POROUS FLEXIBLE PAVEMENT.

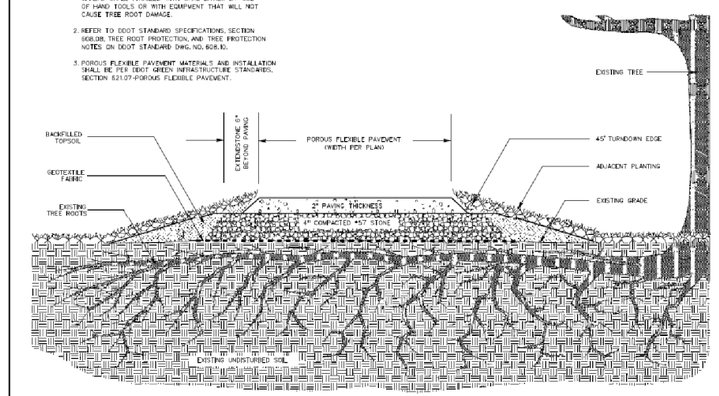

DATE	APPR.
REVISED	
ISSUED:	
REFERENCE	

RECOMMENDED: PROJECT MANAGER

APPROVED: CHIEF TRANSPORTATION ENGINEER

POROUS FLEXIBLE PAVEMENT - ABOVE GRADE

DISTRICT OF COLUMBIA
DEPARTMENT OF TRANSPORTATION

DWG. NO. 621.08

LS-16

D.C. DEPARTMENT OF TRANSPORTATION
INFRASTRUCTURE PROJECT MANAGEMENT ADMINISTRATION
PROJECT MANAGEMENT DIVISION

KENNEDY STEET, N.W. IMPROVEMENT
FROM GEORGIA AVENUE TO NORTH CAPITOL STREET

PROJECT ENG.	
DESIGNED BY	RM
CHECKED BY	RMKF
DRAWN BY	RMGRKS
PROJECT MGR.	RM

LANDSCAPE PAVING DETAILS

DIVISION CHIEF

DATE

FILE #LD-P016-KennedyStreetImprovement

SHEET 55 OF 173

RHODESIDE & HARWELL
910 King Street
Suite 300
Alexandria, VA 22314
703-683-7447 ph
703-683-7448 fx
www.rhodeside-harwell.com
Landscape Architecture and Planning

Precision Systems, Inc.
Engineers, Planners and Architects
WASHINGTON, D.C.

NO.	DESCRIPTION	NAME	DATE

REVISIONS

p:\60570\for printing\civil\pLD-P016-KennedyStreetImprovement.dgn $PENTBLS$
Tuesday, July 28, 2015 AT 04:02 PM $PLTDRVS$

REG	STATE	PROJECT	SHEET NO.	TOTAL SHEETS
3	D.C.	FAP No. STP-8888(480)	56	173

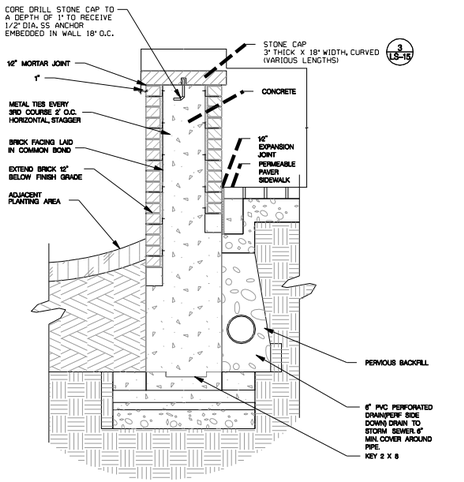

1 BRICK CLAD CURVED WALL – TYPICAL SECTION
1-1/2" = 1'

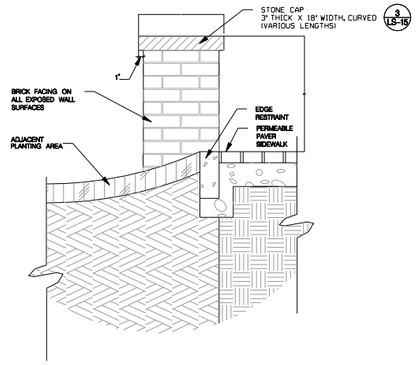

2 BRICK CLAD CURVED WALL – TYPICAL END ELEVATION
1-1/2" = 1'

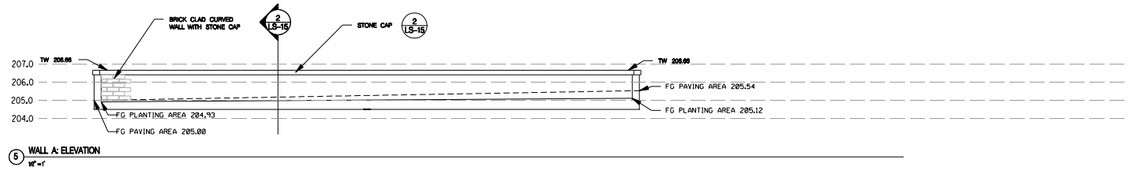

5 WALL A: ELEVATION
1/2" = 1'

6 WALL B: ELEVATION
1/2" = 1'

2 BRICK CLAD CURVED WALL – TYPICAL END ELEVATION
1-1/2" = 1'

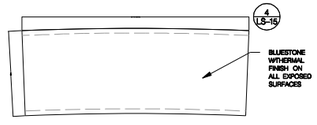

3 STONE CAP
1-1/2" = 1'

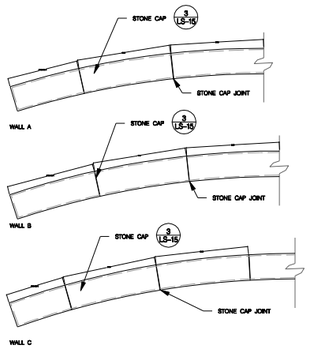

4 STONE CAP – JOINTING PLANS
1/2" = 1'

7 WALL C: ELEVATION
1/2" = 1'

LS-17

RHODESIDE & HARWELL
910 King Street
Suite 300
Alexandria, VA 22314
703-683-7447 ph
703-683-7448 fx
www.rhodeside-harwell.com
Landscape Architecture and Planning

Precision Systems, Inc.
Engineers, Planners and Architects
WASHINGTON, D.C.

NO.	DESCRIPTION	NAME	DATE

REVISIONS

D.C. DEPARTMENT OF TRANSPORTATION
INFRASTRUCTURE PROJECT MANAGEMENT ADMINISTRATION
PROJECT MANAGEMENT DIVISION

KENNEDY STEET, N.W. IMPROVEMENT
FROM GEORGIA AVENUE TO NORTH CAPITOL STREET

PROJECT ENG. ____
DESIGNED BY RM
CHECKED BY RMKF
DRAWN BY RM/RMS
PROJECT MGR. RM

LANDSCAPE WALL DETAILS

DIVISION CHIEF
DATE ____
FILE pLD-P015-KennedyStreetImprovement
SHEET 56 OF 173

p:\60570\RHI\pLD-P017-KennedyStreetImprovement.dgn $PLTDRVS$ $PENTBLS$
Tuesday, July 28, 2015 AT 04:04 PM

REG	STATE	PROJECT	SHEET NO.	TOTAL SHEETS
3	D.C.	FAP No. STP-8888(480)	57	173

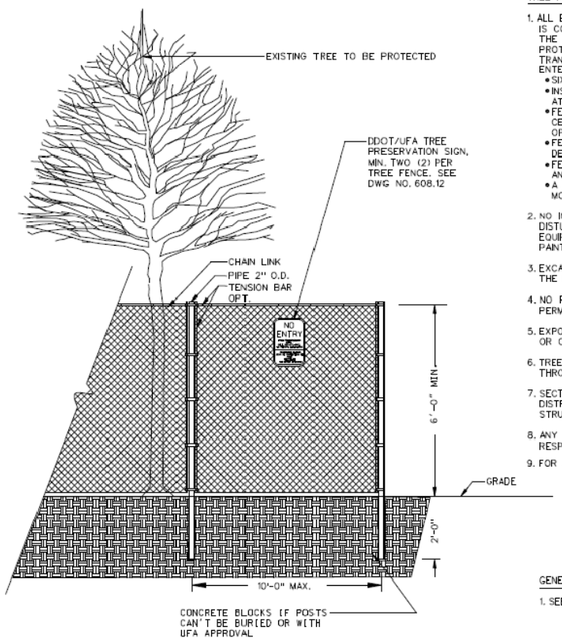

TREE PROTECTION NOTES:

1. ALL EXISTING STREET TREES, TO REMAIN WITHIN A WORK ZONE UNTIL A PROJECT IS COMPLETED, REQUIRE THE FOLLOWING AS TREE PROTECTION. IF FOR ANY REASON THE SCOPE OF THE PROJECT REQUIRES WORK TO BE PERFORMED WITHIN THE FENCED PROTECTION ZONE, THE PERMIT HOLDER MUST CONTACT THE DISTRICT DEPARTMENT OF TRANSPORTATION'S URBAN FORESTRY ADMINSTRATION (UFA) AT 202-671-5133 BEFORE ENTERING.
   - SIX (6) FOOT TALL CHAIN LINK FENCING ON ALL SIDES.
   - INSTALL FENCING PRIOR TO AND MAINTAIN THROUGHOUT CONSTRUCTION, REMOVING ONLY AT THE END OF THE PROJECT.
   - FENCING SHALL PROTECT AN AREA NO SMALLER THAN FOUR (4) FEET BY NINE (9) FEET, CENTERED ON THE TREE, OR ENCLOSE MULTIPLE STREET TREES WHEN IN A CONTINUOUS, OPEN TREE PLANTING SPACE AND SITE ACCESS ALLOWS.
   - FENCING SHALL HAVE VERTICAL AND HORIZONTAL SUPPORT RAILINGS TO DECEASE FLEXIBILITY AND PREVENT SAGGING.
   - FENCE POSTS SHALL BE ANCHORED IN THE GROUND TO PREVENT MOVEMENT AND PROVIDE A SECURE BARRIER.
   - A MINIMUM OF TWO (2) DDOT/UFA STANDARD TREE PRESERVATION SIGNS SHALL BE MOUNTED ON THE FENCE OF EACH ENCLOSED TREE PROTECTION AREA.
2. NO INSTALLATION OF SILT FENCE/SUPER SILT FENCE, TRENCHING, ALTERATION OR DISTURBANCE TO EXISTING GRADE; STAGING/STORAGE OF CONSTRUCTION MATERIALS, EQUIPMENT, SOIL, OR DEBRIS; DISPOSAL OF ANY MATERIALS SUCH AS CONCRETE, GAS, OIL, PAINT, OR BLACKTOP IS ALLOWED WITHIN THE FENCED TREE PROTECTION ZONE.
3. EXCAVATIONS WITHIN THE DRIP LINE SHALL PROCEED WITH CARE BY USE OF HAND TOOLS. THE DRIPLINE IS DEFINED AS THE GROUND AREA UNDER THE CANOPY OF THE TREE.
4. NO ROOTS LARGER THAN TWO (2) INCHES IN DIAMETER ARE TO BE CUT WITHOUT UFA PERMISSION.
5. EXPOSED ROOTS TWO (2) INCHES AND LARGER IN DIAMETER SHALL BE WRAPPED IN BURLAP OR OTHER APPROVED MATERIAL AND KEPT MOIST AT ALL TIMES.
6. TREES THAT ARE PROTECTED ARE TO BE WATERED EVERY TEN (10) DAYS FROM APRIL THROUGH SEPTEMBER.
7. SECTION 608.07 - TREE PROTECTION AND 608.08 - TREE ROOT PRTOECTION OF THE 2013 DISTRICT DEPARTMENT OF TRANSPORTATION STANDARD SPECIFICATIONS FOR HIGHWAYS AND STRUCTURES WILL APPLY SHOULD ANY DAMAGE OCCUR TO THE EXISTING STREET TREES.
8. ANY FINES RELATED TO DAMAGE TO A STREET TREE ON A JOB SITE SHALL BE THE RESPONSIBILITY OF THE PERMIT HOLDER.
9. FOR ANY QUESTIONS, CALL DDOT URBAN FORESTRY ADMINISTRATION AT 202-671-5133.

GENERAL NOTES:

1. SEE TREE PROTECTION FENCE - PLAN, DWG. NO.608.11

DATE	APPR.	RECOMMENDED: PROJECT MANAGER	TREE PROTECTION FENCE - ELEVATION
REVISED		APPROVED: CHIEF TRANSPORTATION ENGINEER	d. DISTRICT OF COLUMBIA DEPARTMENT OF TRANSPORTATION
ISSUED:			DWG. NO. 608.10
	REFERENCE		

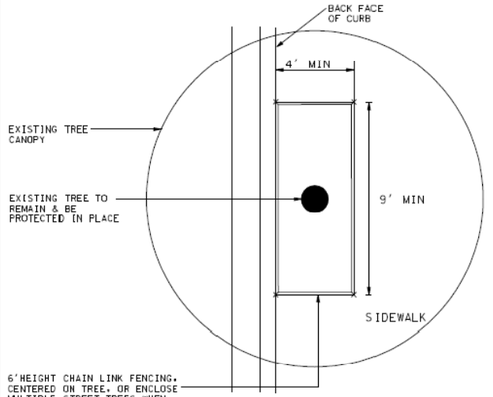

TYPICAL STREET TREE PROTECTION

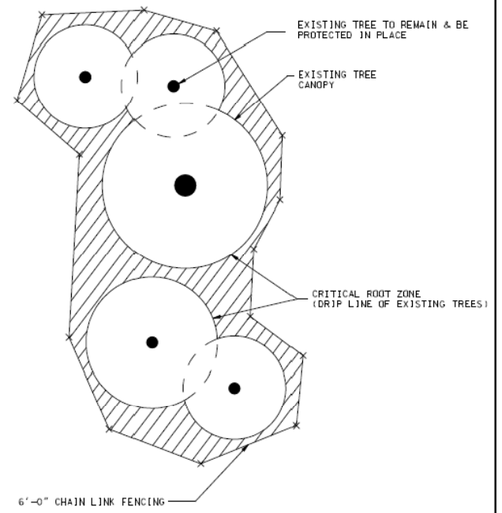

TYPICAL OPEN AREA TREE PROTECTION

NOTES:

1. FOR STREET TREES (TREES PLANTED IN THE TREE PLANTING SPACE BETWEEN CURB AND SIDEWALK), REFER TO DETAIL ABOVE LABELED "TYPICAL STREET TREE PROTECTION" FOR TREES IN OPEN AREAS (PUBLIC PARKING BEHIND SIDEWALK OR PARK SPACE), REFER TO DETAIL ABOVE LABELED "TYPICAL OPEN AREA TREE PROTECTION".
2. SEE TREE PROTECTION FENCE-ELEVATION. DWG. NO. 608.10 FOR TREE PROTECTION NOTES.

DATE	APPR.	RECOMMENDED: PROJECT MANAGER	TREE PROTECTION FENCE - PLAN VIEW
REVISED		APPROVED: CHIEF TRANSPORTATION ENGINEER	d. DISTRICT OF COLUMBIA DEPARTMENT OF TRANSPORTATION
ISSUED:			DWG. NO. 608.11
	REFERENCE		

LS-18

D.C. DEPARTMENT OF TRANSPORTATION
INFRASTRUCTURE PROJECT MANAGEMENT ADMINISTRATION
PROJECT MANAGEMENT DIVISION

KENNEDY STEET, N.W. IMPROVEMENT
FROM GEORGIA AVENUE TO NORTH CAPITOL STREET

PROJECT ENG. ____
DESIGNED BY RM
CHECKED BY RMKF
DRAWN BY RMGRKS
PROJECT MGR. RM

TREE PROTECTION FENCE DETAILS

DIVISION CHIEF
DATE ____
FILE pLD-P018-KennedyStreetImprovement
SHEET 57 OF 173

RHODESIDE & HARWELL
810 King Street
Suite 300
Alexandria, VA 22314
703-683-7447 ph
703-683-7448 fx
www.rhodeside-harwell.com
Landscape Architecture and Planning

Precision Systems, Inc.
Engineers, Planners and Architects
WASHINGTON, D.C.

NO.	DESCRIPTION	NAME	DATE
	REVISIONS		

p:\60570\RH\pLD-P018-KennedyStreetImprovement.dgn $PLTDRVS$
Tuesday, July 28, 2015 AT 04:05 PM $PENTBLS$

REG	STATE	PROJECT	SHEET NO.	TOTAL SHEETS
3	D.C.	FAP No. STP-8888(480)	58	173

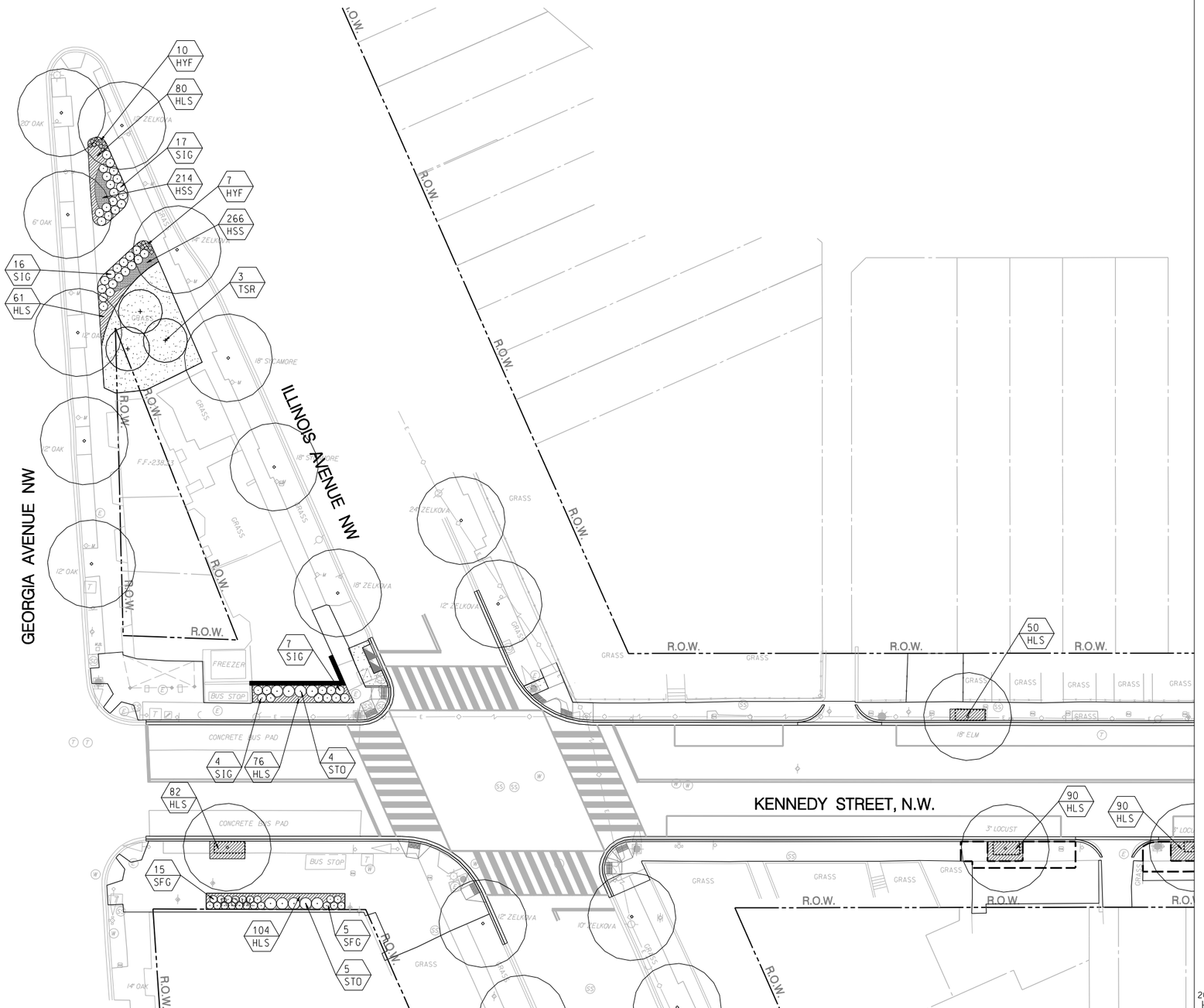

MATCHLINE SEE SHEET LS-17

SYMBOL LEGEND

- EXISTING TREE TO REMAIN
- SHRUBS
- NEW TREE
- TREE ROOT ZONE/SAND BASED STRUCTURAL SOIL
- PROPOSED TURF
- 665 HLS — PLANT QUANTITY / PLANT SYMBOL
- RIGHT-OF-WAY LINE

TREE PLANTING NOTES:

1. TREE PALNTING SHALL COMPLY WITH THE CURRENT VERSION OF THE DISTRICT DEPARTMENT OF TRANSPORTATION STANDARD SPECIFICATIONS FOR HIGHWAYS AND STRUCTURES AND STANDARD DRAWINGS NO. 611.18 AND 611.19. DECIDUOUS TREES SHALL ONLY BE PLANTED BETWEEN OCTOBER 15 AND MAY 1 AS PER THE SPRING AND FALL PLANTING SEASON DATES.
2. PEAT MOSS IS NOT ALLOWED FOR USE AS A SOIL AMENDAMENT.
3. TREE STAKING SHALL BE AS PER SECTION 608.02 (2013 DDOT STANDARD SPECIFICATIONS). ONLY 2 STAKES SHALL BE INSTALLED LED WITH ARBOR TIES. DETAIL AND SPECIFICATION SHALL BE PROVIDED BY UFA.
4. DO NOT PLANT GRASS/SOD WITHIN 4 FT. OF THE ROOT FLARE OF A TREE. FINISH THIS AREA OFF WITH A 2-3" LAYER OF MULCH, BUT DO NOT PLACE UP AGAINST OR MOUND AROUND ROOT FLARE.
5. CONTRACTOR SHALL CONTACT JOEL CONLON AT JOEL.CONLON@DC.GOV OR ROBER CORLETTA AT ROBERT.CORLETTA@DC.GOV WHEN THE TREES ARE READY TO BE PLANTED, PROVIDING AT LEAST 48 HOURS' NOTICE.
6. THE DEPTH OF PLANTING/STRUCTURAL SOIL FOR EACH PROPOSED TREE SHALL BE 36 FEET.
7. THE AREA OF PLANTING/STRUCTURAL SOIL SHOWN ON THE PLAN FOR EACH PROPOSED LARGE TREE IS EQUAL OR GREATER THAN 500 SF.

N

GRAPHIC SCALE

20 10 0 20 40

1" = 20'-0" HORIZ.

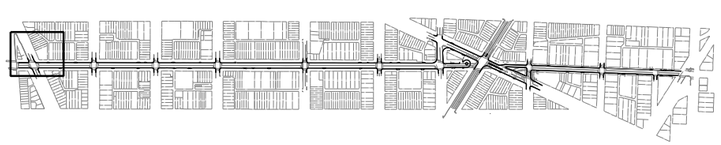

RHODESIDE & HARWELL
210 King Street
Suite 320
Alexandria, VA 22314
703-683-7447 ph
703-683-7448 fx
www.rhodeside-harwell.com
Landscape Architecture and Planning

Precision Systems, Inc.
Engineers, Planners and Architects
WASHINGTON, D.C.

NO.	DESCRIPTION	NAME	DATE

REVISIONS

LS-19

D.C. DEPARTMENT OF TRANSPORTATION
INFRASTRUCTURE PROJECT MANAGEMENT ADMINISTRATION
PROJECT MANAGEMENT DIVISION

KENNEDY STEET, N.W. IMPROVEMENT
FROM GEORGIA AVENUE TO NORTH CAPITOL STREET

PROJECT ENG. ____
DESIGNED BY RM
CHECKED BY RMKF
DRAWN BY RM/RKS
PROJECT MGR. RM

LANDSCAPE PLANTING PLAN – 1

DIVISION CHIEF
DATE ____
FILE sLD-P015-KennedyStreetImprovement
SHEET 58 OF 173

p:\60570\RHI\pLD-P019-KennedyStreetImprovement.dgn $PENTBLS$ $PLTDRVS$
Tuesday, July 28, 2015 AT 04:05 PM

REG	STATE	PROJECT	SHEET NO.	TOTAL SHEETS
3	D.C.	FAP No. STP-8888(480)	59	173

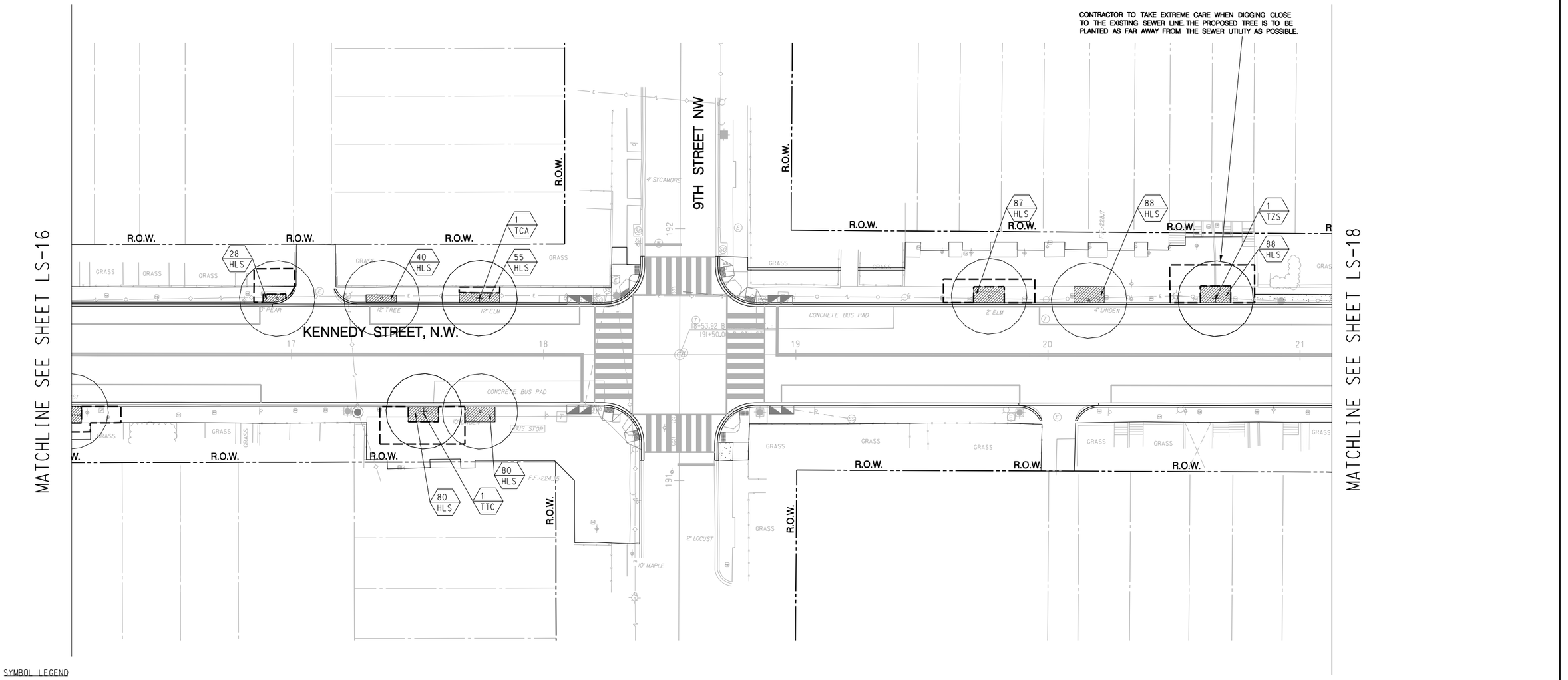

SYMBOL LEGEND

- EXISTING TREE TO REMAIN
- SHRUBS
- NEW TREE
- TREE ROOT ZONE/SAND BASED STRUCTURAL SOIL
- PROPOSED TURF
- 665 HLS — PLANT QUANTITY / PLANT SYMBOL
- RIGHT-OF-WAY LINE

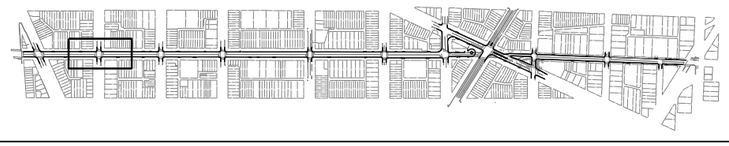

GRAPHIC SCALE

20 10 0 20 40

1" = 20'-0" HORIZ.

N

LS-20

RHODESIDE & HARWELL
540 King Street
Suite 200
Alexandria, VA 22314
703-888-7447 ph
703-888-7448 fx
www.rhodeside-harwell.com
Landscape Architecture and Planning

Precision Systems, Inc.
Engineers, Planners and Architects
WASHINGTON, D.C.

NO.	DESCRIPTION	NAME	DATE

REVISIONS

D.C. DEPARTMENT OF TRANSPORTATION
INFRASTRUCTURE PROJECT MANAGEMENT ADMINISTRATION
PROJECT MANAGEMENT DIVISION

KENNEDY STEET, N.W. IMPROVEMENT
FROM GEORGIA AVENUE TO NORTH CAPITOL STREET

PROJECT ENG. ____
DESIGNED BY RM
CHECKED BY RMKF
DRAWN BY RM/RKS
PROJECT MGR. RM

LANDSCAPE PLANTING PLAN – 2

DIVISION CHIEF
DATE ____
FILE ddd-P017-KennedyStreetImprovement
SHEET 59 OF 173

p:\60570\RHiVpLD-P020-KennedyStreetImprovement.dgn $PENTBLS$ $PLTDRVS$
Tuesday, July 28, 2015 AT 04:06 PM

REG	STATE	PROJECT	SHEET NO.	TOTAL SHEETS
3	D.C.	FAP No. STP-8888(480)	60	173

CONTRACTOR TO TAKE EXTREME CARE WHEN DIGGING CLOSE TO THE EXISTING SEWER LINE. THE PROPOSED TREE IS TO BE PLANTED AS FAR AWAY FROM THE SEWER UTILITY AS POSSIBLE.

MATCHLINE SEE SHEET LS-17

MATCHLINE SEE SHEET LS-19

KENNEDY STREET, N.W.

8TH STREET NW

R.O.W.

87 HLS

1 TOP

97 HLS

82 HLS

81 HLS

1 TGT

GRASS

4" MAPLE

3" MAPLE

6" LINDEN

3" LINDEN

CONCRETE BUS PAD

SAT DISH

LAND SCAPE

MULCH

16" OAK

BASEMENT ENTRY

F.F.=227.52

F.F.=222.23

F.F.=225.04

F.F.=228.44

CONTRACTOR TO TAKE EXTREME CARE WHEN DIGGING CLOSE TO THE EXISTING SEWER LINE. THE PROPOSED TREE IS TO BE PLANTED AS FAR AWAY FROM THE SEWER UTILITY AS POSSIBLE.

SYMBOL LEGEND

- EXISTING TREE TO REMAIN
- SHRUBS
- NEW TREE
- TREE ROOT ZONE/SAND BASED STRUCTURAL SOIL
- PROPOSED TURF
- 665 / HLS — PLANT QUANTITY / PLANT SYMBOL
- RIGHT-OF-WAY LINE

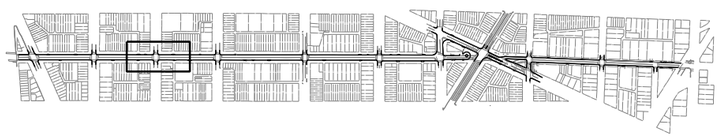

GRAPHIC SCALE

20 10 0 20 40

1" = 20'-0" HORIZ.

LS-21

RHODESIDE & HARWELL
310 King Street
Suite 203
Alexandria, VA 22314
703-683-7447 ph
703-683-7449 fx
www.rhodeside-harwell.com
Landscape Architecture and Planning

Precision Systems, Inc.
Engineers, Planners and Architects
WASHINGTON, D.C.

NO	DESCRIPTION	NAME	DATE

REVISIONS

D.C. DEPARTMENT OF TRANSPORTATION
INFRASTRUCTURE PROJECT MANAGEMENT ADMINISTRATION
PROJECT MANAGEMENT DIVISION

KENNEDY STEET, N.W. IMPROVEMENT
FROM GEORGIA AVENUE TO NORTH CAPITOL STREET

LANDSCAPE PLANTING PLAN – 3

PROJECT ENG.	
DESIGNED BY	RM
CHECKED BY	RMKF
DRAWN BY	RMGRKS
PROJECT MGR.	RM

DIVISION CHIEF

DATE

FILE pLD-P018-KennedyStreetImprovement

SHEET 60 OF 173

p:\60570\RH\pLD-P021-KennedyStreetImprovement.dgn $PENTBLS$ $PLTDRVS$
Tuesday, July 28, 2015 AT 04:07 PM

REG	STATE	PROJECT	SHEET NO.	TOTAL SHEETS
3	D.C.	FAP No. STP-8888(480)	61	173

CONTRACTOR TO TAKE EXTREME CARE WHEN DIGGING CLOSE TO THE EXISTING SEWER LINE. THE PROPOSED TREE IS TO BE PLANTED AS FAR AWAY FROM THE SEWER UTILITY AS POSSIBLE.

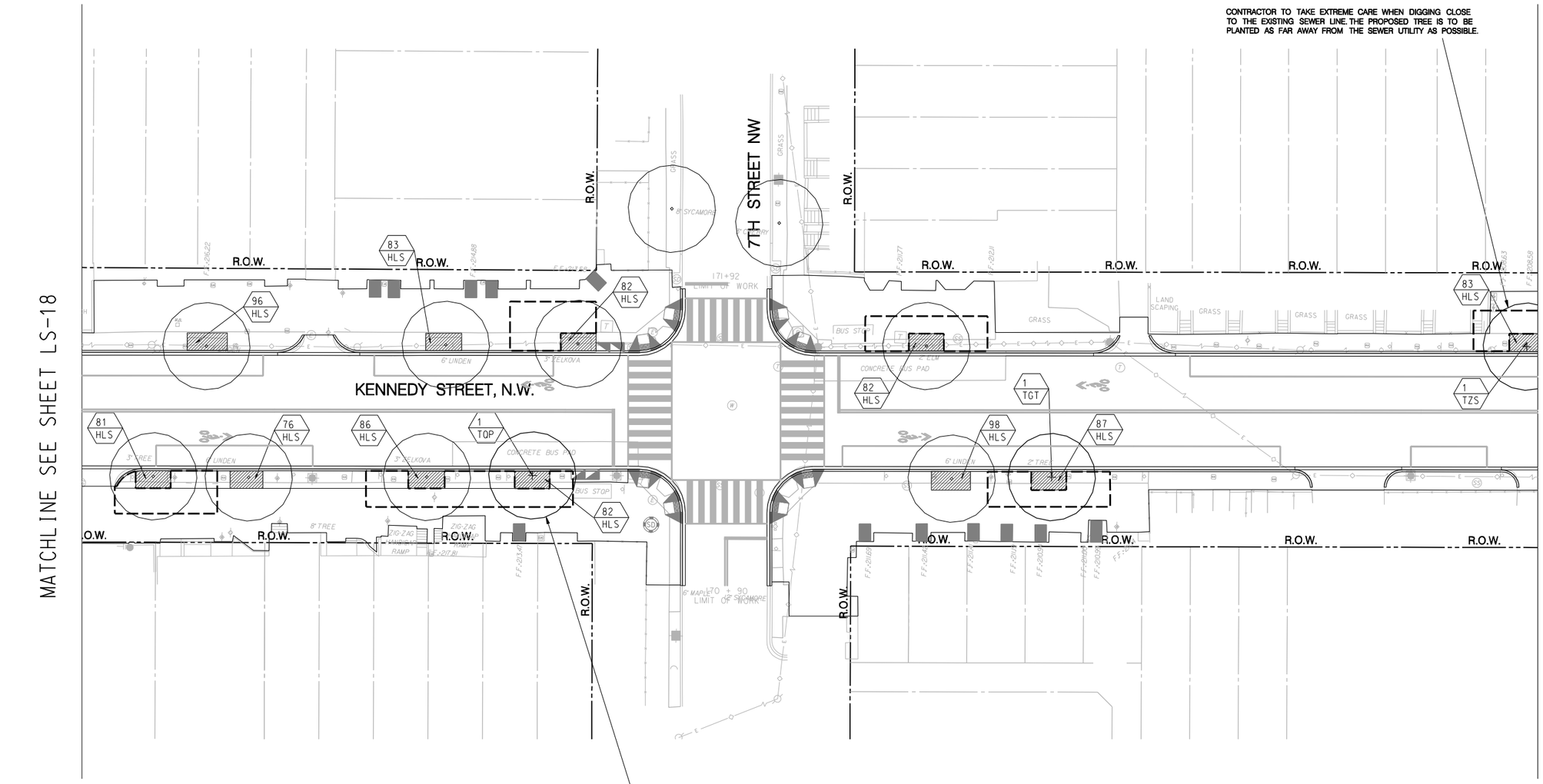

CONTRACTOR TO TAKE EXTREME CARE WHEN DIGGING CLOSE TO THE EXISTING SEWER LINE. THE PROPOSED TREE IS TO BE PLANTED AS FAR AWAY FROM THE SEWER UTILITY AS POSSIBLE.

SYMBOL LEGEND

- EXISTING TREE TO REMAIN
- SHRUBS
- NEW TREE
- TREE ROOT ZONE/SAND BASED STRUCTURAL SOIL
- PROPOSED TURF
- 665 HLS — PLANT QUANTITY / PLANT SYMBOL
- RIGHT-OF-WAY LINE

N

GRAPHIC SCALE

20 10 0 20 40

1" = 20'-0" HORIZ.

LS-22

RHODESIDE & HARWELL
540 King Street
Suite 200
Alexandria, VA 22314
703-683-7447 ph
703-683-7449 fx
www.rhodeside-harwell.com
Landscape Architecture and Planning

Precision Systems, Inc.
Engineers, Planners and Architects
WASHINGTON, D.C.

NO	DESCRIPTION	NAME	DATE

REVISIONS

D.C. DEPARTMENT OF TRANSPORTATION
INFRASTRUCTURE PROJECT MANAGEMENT ADMINISTRATION
PROJECT MANAGEMENT DIVISION

KENNEDY STEET, N.W. IMPROVEMENT
FROM GEORGIA AVENUE TO NORTH CAPITOL STREET

LANDSCAPE PLANTING PLAN – 4

PROJECT ENG. ____
DESIGNED BY RM
CHECKED BY RMKF
DRAWN BY RMGRKS
PROJECT MGR. RM

DIVISION CHIEF
DATE ____

FILE pLD-P022-KennedyStreetImprovement
SHEET 61 OF 173

$PENTBLS$
$PLTDRVS$
p:\60570\RHI\pLD-P022-KennedyStreetImprovement.dgn
Tuesday, July 28, 2015 AT 04:07 PM

REG	STATE	PROJECT	SHEET NO.	TOTAL SHEETS
3	D.C.	FAP No. STP-8888(480)	62	173

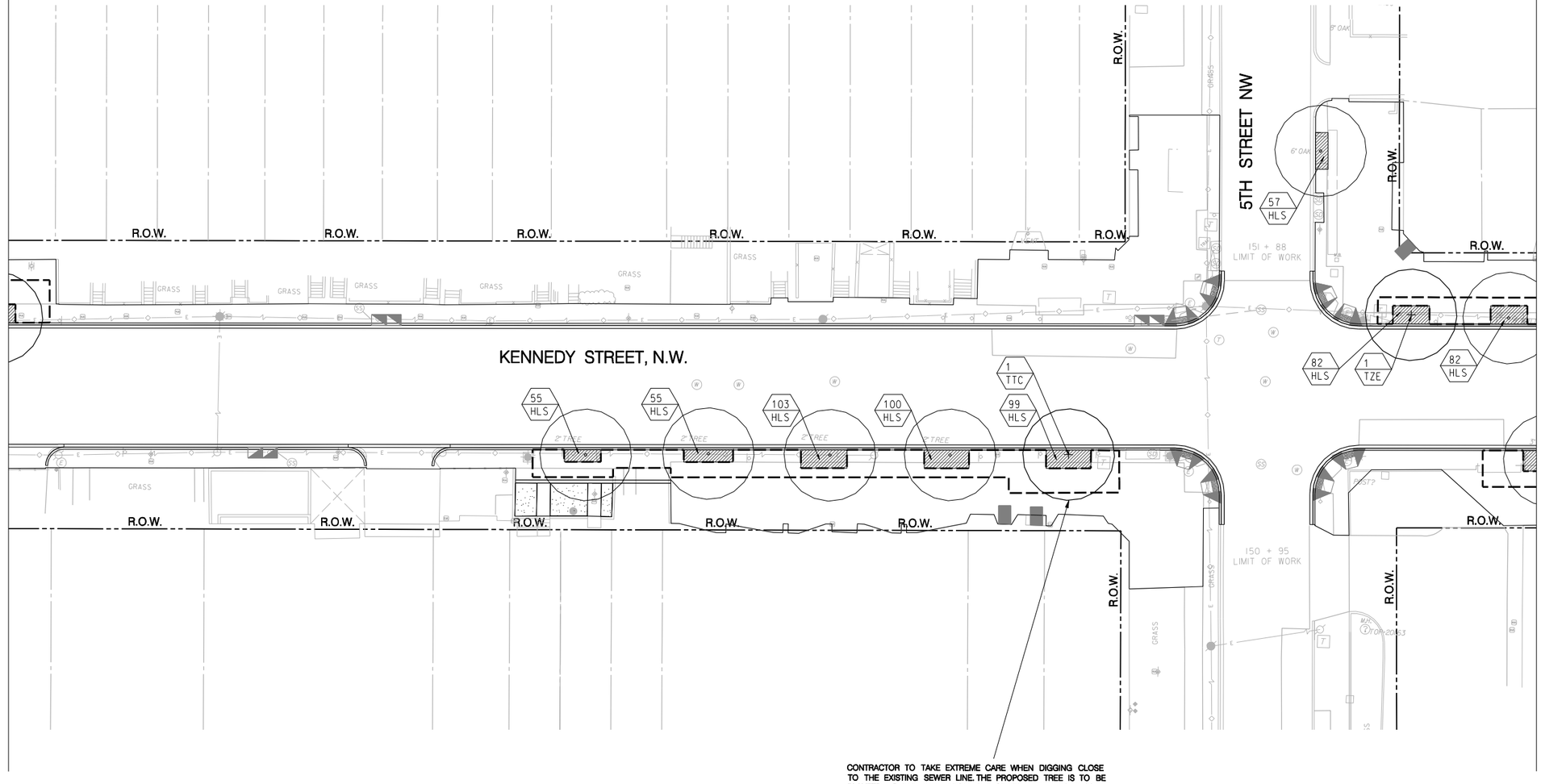

SYMBOL LEGEND

- EXISTING TREE TO REMAIN
- SHRUBS
- NEW TREE
- TREE ROOT ZONE/SAND BASED STRUCTURAL SOIL
- PROPOSED TURF
- 665 HLS — PLANT QUANTITY / PLANT SYMBOL
- RIGHT-OF-WAY LINE

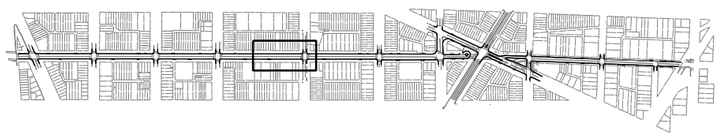

GRAPHIC SCALE

20 10 0 20 40

1" = 20'-0" HORIZ.

N

LS-23

D.C. DEPARTMENT OF TRANSPORTATION
INFRASTRUCTURE PROJECT MANAGEMENT ADMINISTRATION
PROJECT MANAGEMENT DIVISION

KENNEDY STEET, N.W. IMPROVEMENT
FROM GEORGIA AVENUE TO NORTH CAPITOL STREET

LANDSCAPE PLANTING PLAN – 5

PROJECT ENG. ____
DESIGNED BY RM
CHECKED BY RMKF
DRAWN BY RMGRKS
PROJECT MGR. RM
DIVISION CHIEF
DATE ____
FILE pLD-P020-KennedyStreetImprovement
SHEET 62 OF 173

NO	DESCRIPTION	NAME	DATE

REVISIONS

RHODESIDE & HARWELL
216 King Street
Suite 200
Alexandria, VA 22314
703-683-7447 ph
703-683-7449 fx
www.rhodeside-harwell.com
Landscape Architecture and Planning

Precision Systems, Inc.
Engineers, Planners and Architects
WASHINGTON, D.C.

p:\60570\RHI\pLD-P023-KennedyStreetImprovement.dgn $PENTBLS$ $PLTDRVS$
Tuesday, July 28, 2015 AT 04:07 PM

REG	STATE	PROJECT	SHEET NO.	TOTAL SHEETS
3	D.C.	FAP No. STP-8888(480)	63	173

MATCHLINE SEE SHEET LS-20

MATCHLINE SEE SHEET LS-22

KENNEDY STREET, N.W.

4TH STREET NW

R.O.W.

GRASS

CONCRETE

BRICK

ASPHALT

STONE WALL

BRICK WALL

LIMIT

121 HLS

106 HLS

111 HLS

1 TOP

1 TCA

SYMBOL LEGEND

EXISTING TREE TO REMAIN

SHRUBS

NEW TREE

TREE ROOT ZONE/SAND BASED STRUCTURAL SOIL

PROPOSED TURF

665 HLS — PLANT QUANTITY / PLANT SYMBOL

RIGHT-OF-WAY LINE

N

GRAPHIC SCALE

20 10 0 20 40

1" = 20'-0" HORIZ.

LS-24

D.C. DEPARTMENT OF TRANSPORTATION
INFRASTRUCTURE PROJECT MANAGEMENT ADMINISTRATION
PROJECT MANAGEMENT DIVISION

KENNEDY STEET, N.W. IMPROVEMENT
FROM GEORGIA AVENUE TO NORTH CAPITOL STREET

LANDSCAPE PLANTING PLAN – 6

PROJECT ENG. ____
DESIGNED BY RM
CHECKED BY RMKF
DRAWN BY RM/RMS
PROJECT MGR. RM

DIVISION CHIEF

DATE ____

FILE pLD-P024-KennedyStreetImprovement

SHEET 63 OF 173

NO.	DESCRIPTION	NAME	DATE

REVISIONS

Precision Systems, Inc.
Engineers, Planners and Architects
WASHINGTON, D.C.

RHODESIDE & HARWELL
910 King Street
Suite 200
Alexandria, VA 22314
703-683-7447 ph
703-683-7449 fx
www.rhodeside-harwell.com
Landscape Architecture and Planning

p:\60570\RH\pLD-P024-KennedyStreetImprovement.dgn
Tuesday, July 28, 2015 AT 04:08 PM
$PENTBLS$
$PLTDRVS$

REG	STATE	PROJECT	SHEET NO.	TOTAL SHEETS
3	D.C.	FAP No. STP-8888(480)	64	173

MATCHLINE SEE SHEET LS-21

MATCHLINE SEE SHEET LS-23

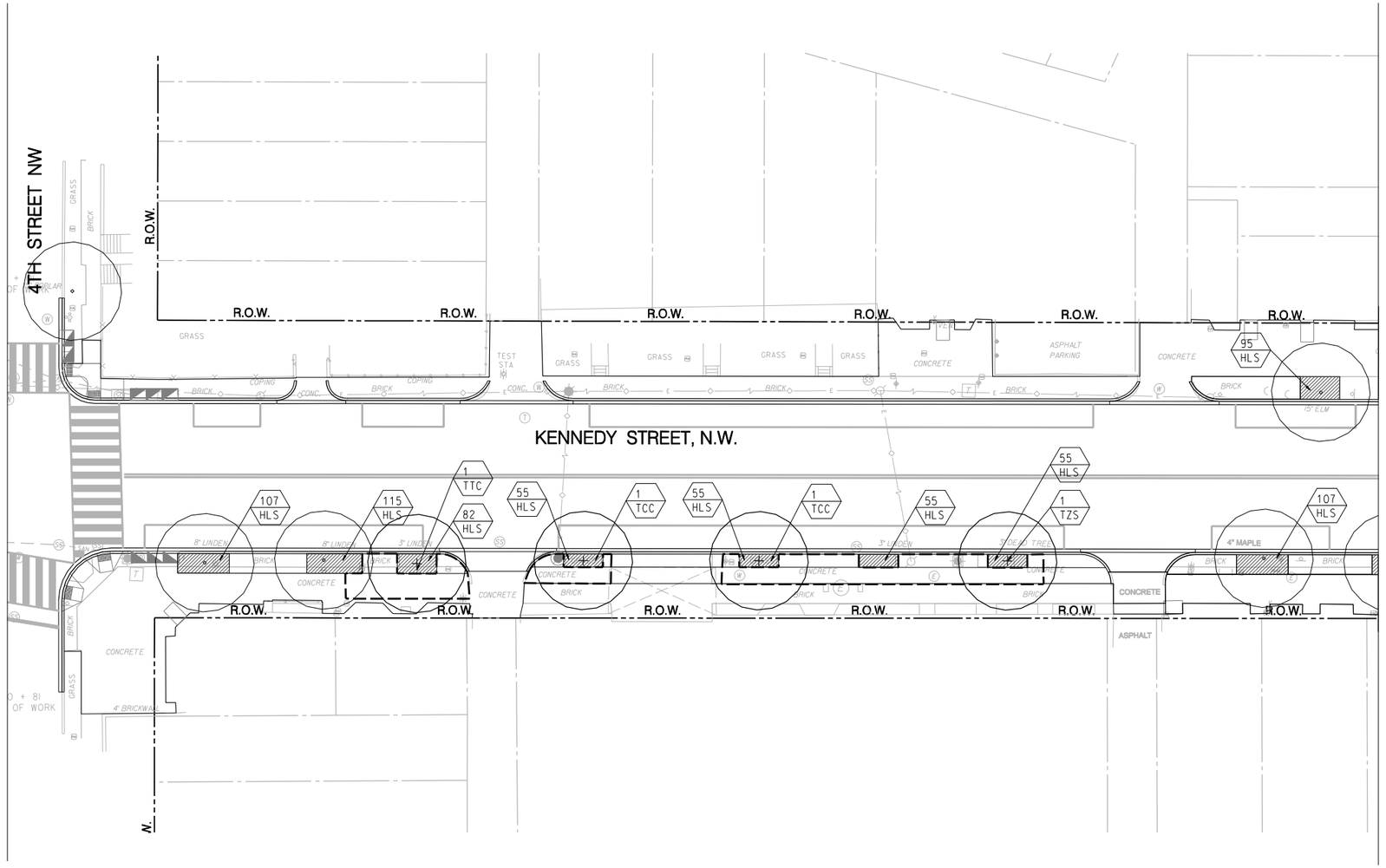

SYMBOL LEGEND

- EXISTING TREE TO REMAIN
- SHRUBS
- NEW TREE
- TREE ROOT ZONE/SAND BASED STRUCTURAL SOIL
- PROPOSED TURF
- 665 HLS — PLANT QUANTITY / PLANT SYMBOL
- RIGHT-OF-WAY LINE

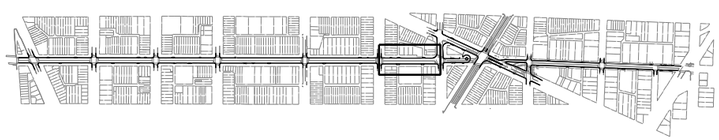

N

GRAPHIC SCALE

20 10 0 20 40

1" = 20'-0" HORIZ.

LS-25

RHODESIDE & HARWELL
910 King Street
Suite 200
Alexandria, VA 22314
703-683-7447 ph
703-683-7449 fx
www.rhodeside-harwell.com
Landscape Architecture and Planning

Precision Systems, Inc.
Engineers, Planners and Architects
WASHINGTON, D.C.

NO	DESCRIPTION	NAME	DATE

REVISIONS

D.C. DEPARTMENT OF TRANSPORTATION
INFRASTRUCTURE PROJECT MANAGEMENT ADMINISTRATION
PROJECT MANAGEMENT DIVISION

KENNEDY STEET, N.W. IMPROVEMENT
FROM GEORGIA AVENUE TO NORTH CAPITOL STREET

PROJECT ENG. ____
DESIGNED BY RM
CHECKED BY RMKF
DRAWN BY RM/RKS
PROJECT MGR. RM

LANDSCAPE PLANTING PLAN – 7

DIVISION CHIEF
DATE ____
FILE p:\D-P025-Kennedy\Streetimprovement
SHEET 64 OF 173

$PENTBL$
$PLTDRVS$
p:\60570\RHI\pLD-P025-KennedyStreetImprovement.dgn
Tuesday, July 28, 2015 AT 04:08 PM

REG	STATE	PROJECT	SHEET NO.	TOTAL SHEETS
3	D.C.	FAP No. STP-8888(480)	65	173

SYMBOL LEGEND

- EXISTING TREE TO REMAIN
- SHRUBS
- NEW TREE
- TREE ROOT ZONE/SAND BASED STRUCTURAL SOIL
- PROPOSED TURF
- 665 / HLS — PLANT QUANTITY / PLANT SYMBOL
- RIGHT-OF-WAY LINE

MISSOURI AVENUE NW

3RD STREET NW

KENNEDY STREET, N.W.

KANSAS AVENUE NW

BIORETENTION AREA

MATCHLINE SEE SHEET LS-22

MATCHLINE SEE SHEET LS-24

GRAPHIC SCALE

20 10 0 20 40

1" = 20'-0" HORIZ.

LS-26

D.C. DEPARTMENT OF TRANSPORTATION
INFRASTRUCTURE PROJECT MANAGEMENT ADMINISTRATION
PROJECT MANAGEMENT DIVISION

KENNEDY STEET, N.W. IMPROVEMENT
FROM GEORGIA AVENUE TO NORTH CAPITOL STREET

LANDSCAPE PLANTING PLAN – 8

PROJECT ENG. ____
DESIGNED BY RM
CHECKED BY RMKF
DRAWN BY RM/GRKS
PROJECT MGR. RM

DIVISION CHIEF
DATE ____
FILE pLD-P026-KennedyStreetImprovement
SHEET 65 OF 173

NO	DESCRIPTION	NAME	DATE

REVISIONS

Precision Systems, Inc.
Engineers, Planners and Architects
WASHINGTON, D.C.

RHODESIDE & HARWELL
Landscape Architecture and Planning

p:\60570\RH\pLD-P026-KennedyStreetImprovement.dgn $PENTBLS$
Tuesday, July 28, 2015 AT 04:09 PM $PLTDRVS$

REG	STATE	PROJECT	SHEET NO.	TOTAL SHEETS
3	D.C.	FAP No. STP-8888(480)	66	173

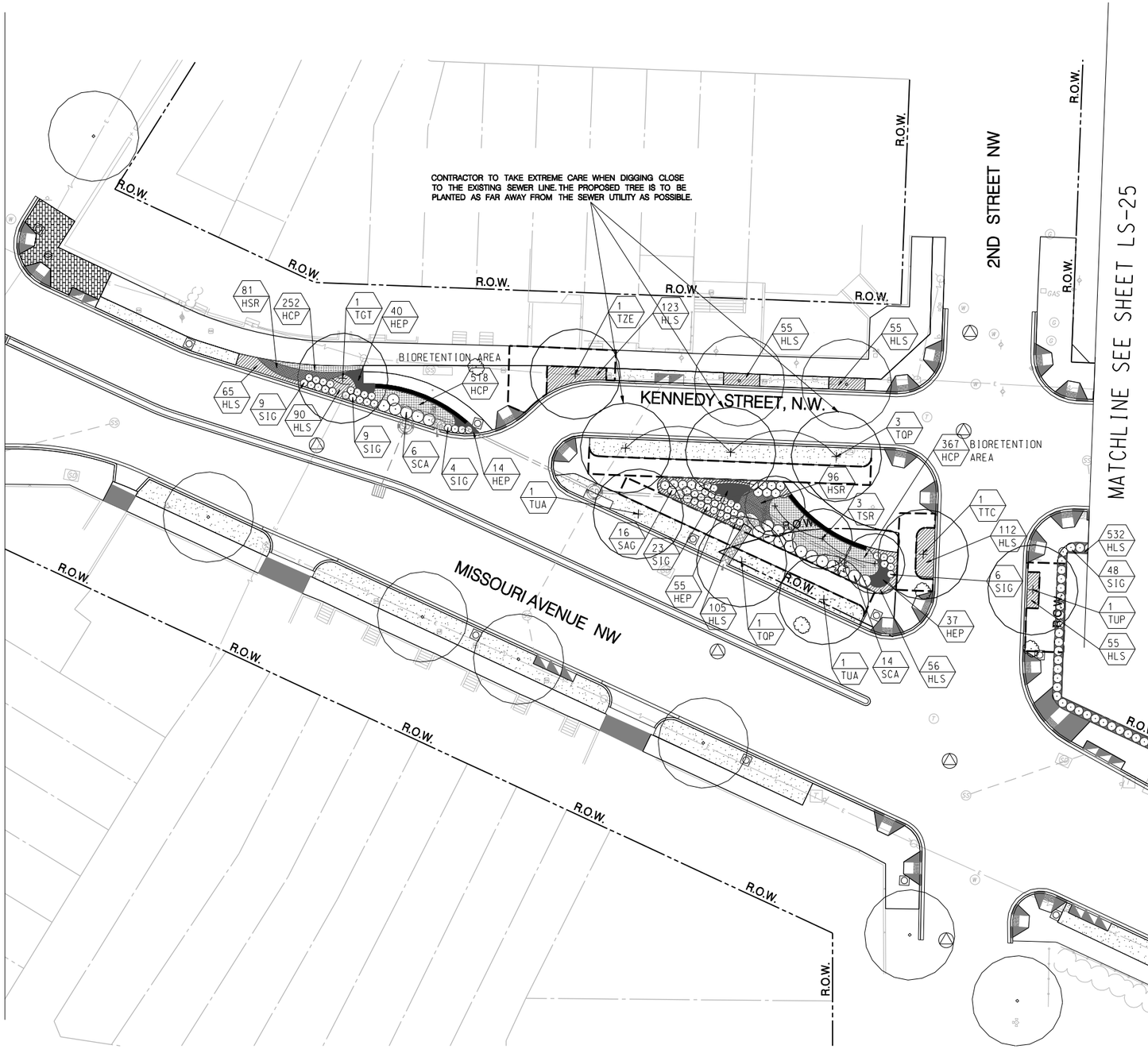

SYMBOL LEGEND

- EXISTING TREE TO REMAIN
- SHRUBS
- NEW TREE
- TREE ROOT ZONE/SAND BASED STRUCTURAL SOIL
- PROPOSED TURF
- 665 HLS — PLANT QUANTITY / PLANT SYMBOL
- RIGHT-OF-WAY LINE

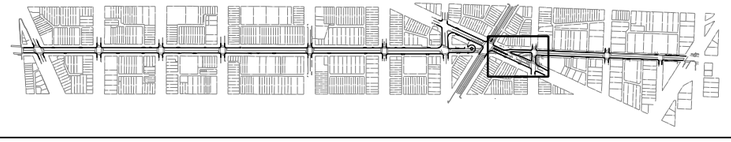

RHODESIDE & HARWELL
910 King Street
Suite 200
Alexandria, VA 22314
703-683-7447 ph
703-683-7448 fx
www.rhodeside-harwell.com
Landscape Architecture and Planning

Precision Systems, Inc.
Engineers, Planners and Architects
WASHINGTON, D.C.

NO.	DESCRIPTION	NAME	DATE

REVISIONS

LS-27

D.C. DEPARTMENT OF TRANSPORTATION
INFRASTRUCTURE PROJECT MANAGEMENT ADMINISTRATION
PROJECT MANAGEMENT DIVISION

KENNEDY STEET, N.W. IMPROVEMENT
FROM GEORGIA AVENUE TO NORTH CAPITOL STREET

PROJECT ENG. ____
DESIGNED BY RM
CHECKED BY RMKF
DRAWN BY RMGRKS
PROJECT MGR. RM

LANDSCAPE PLANTING PLAN – 9

DIVISION CHIEF
DATE ____
FILE #LD-P024-KennedyStreetImprovement
SHEET 66 OF 173

p:\60570\RHI\pLD-P027-KennedyStreetImprovement.dgn $PENTBLS$
Tuesday, July 28, 2015 AT 04:09 PM $PLTDRVS$

REG	STATE	PROJECT	SHEET NO.	TOTAL SHEETS
3	D.C.	FAP No. STP-8888(480)	67	173

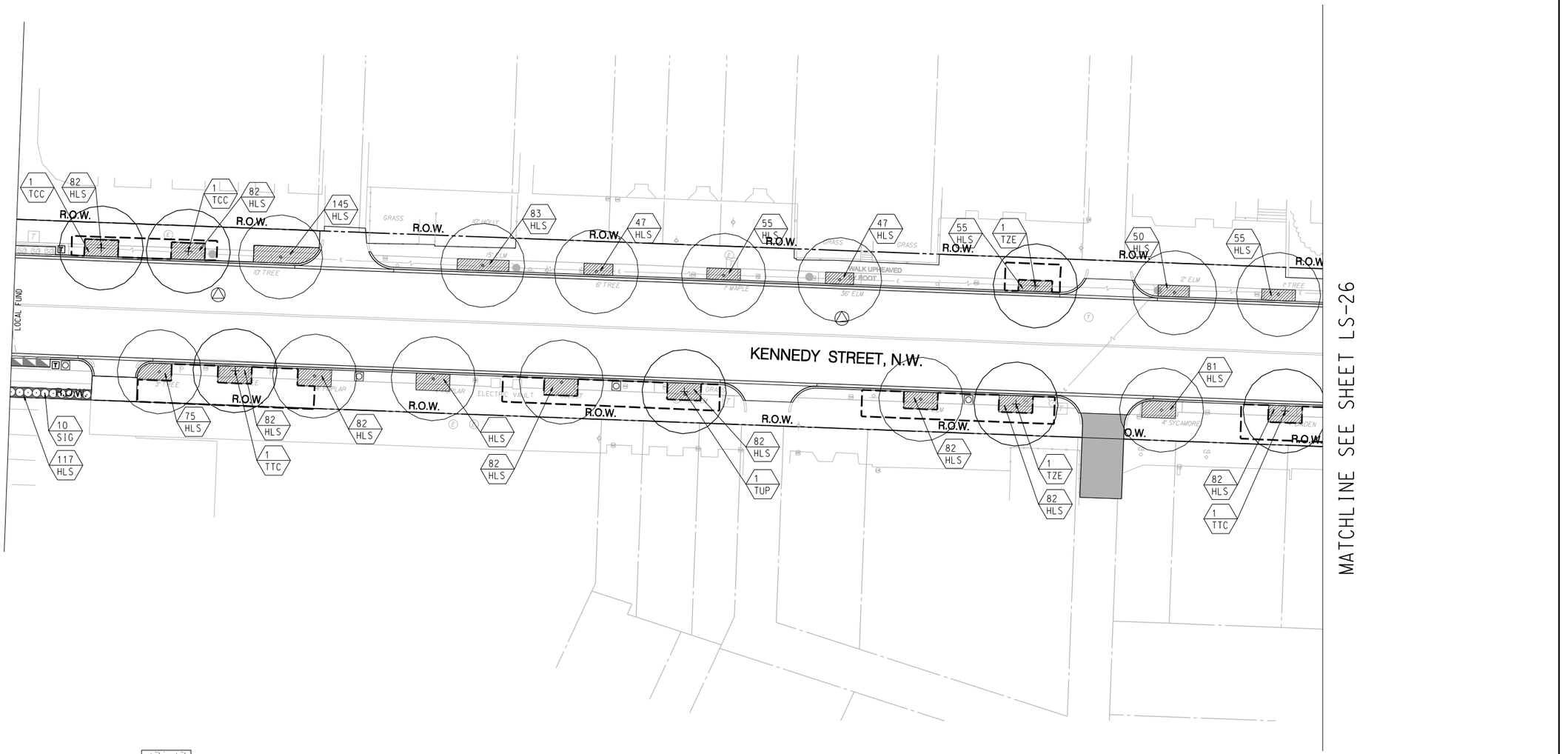

SYMBOL LEGEND

- EXISTING TREE TO REMAIN
- SHRUBS
- NEW TREE
- TREE ROOT ZONE/SAND BASED STRUCTURAL SOIL
- PROPOSED TURF
- 665 HLS — PLANT QUANTITY / PLANT SYMBOL
- RIGHT-OF-WAY LINE

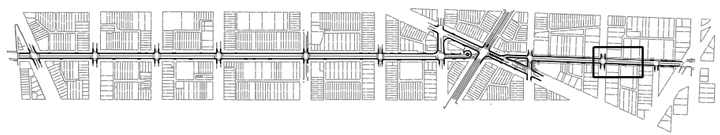

N

GRAPHIC SCALE

20 10 0 20 40

1" = 20'-0" HORIZ.

LS-28

D.C. DEPARTMENT OF TRANSPORTATION
INFRASTRUCTURE PROJECT MANAGEMENT ADMINISTRATION
PROJECT MANAGEMENT DIVISION

KENNEDY STEET, N.W. IMPROVEMENT
FROM GEORGIA AVENUE TO NORTH CAPITOL STREET

PROJECT ENG. ____
DESIGNED BY RM
CHECKED BY RMKF
DRAWN BY RM/GRKS
PROJECT MGR. RM

LANDSCAPE PLANTING PLAN – 10

DIVISION CHIEF
DATE ____
FILE pLD-P028-KennedyStreetImprovement
SHEET 67 OF 173

RHODESIDE & HARWELL
510 King Street
Suite 300
Alexandria, VA 22314
703-683-7447 ph
703-683-7448 fx
www.rhodeside-harwell.com
Landscape Architecture and Planning

Precision Systems, Inc.
Engineers, Planners and Architects
WASHINGTON, D.C.

NO	DESCRIPTION	NAME	DATE

REVISIONS

p:\60570\RHI\pLD-P028-KennedyStreetImprovement.dgn $PENTBLS$
Tuesday, July 28, 2015 AT 04:10 PM $PLTDRVS$

REG	STATE	PROJECT	SHEET NO.	TOTAL SHEETS
3	D.C.	FAP No. STP-8888(480)	68	173

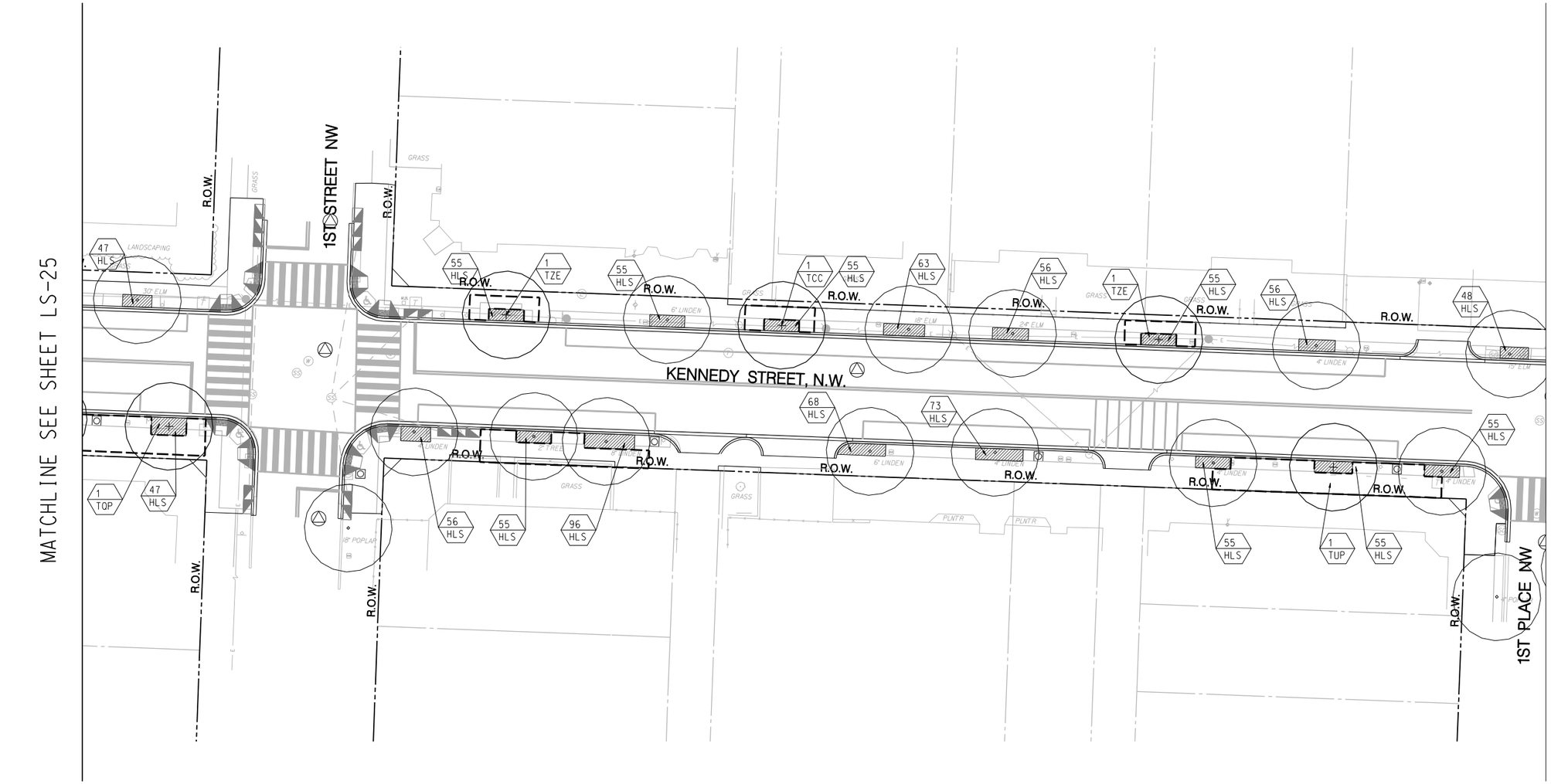

SYMBOL LEGEND

- EXISTING TREE TO REMAIN
- SHRUBS
- NEW TREE
- TREE ROOT ZONE/SAND BASED STRUCTURAL SOIL
- PROPOSED TURF
- 665 HLS — PLANT QUANTITY / PLANT SYMBOL
- RIGHT-OF-WAY LINE

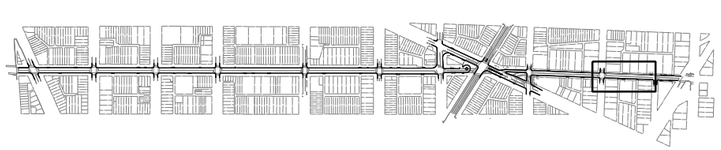

GRAPHIC SCALE

20 10 0 20 40

1" = 20'-0" HORIZ.

RHODESIDE & HARWELL
916 King Street
Suite 200
Alexandria, VA 22314
703-683-7447 ph
703-683-7449 fx
www.rhodeside-harwell.com
Landscape Architecture and Planning

Precision Systems, Inc.
Engineers, Planners and Architects
WASHINGTON, D.C.

NO	DESCRIPTION	NAME	DATE

REVISIONS

LS-29

D.C. DEPARTMENT OF TRANSPORTATION
INFRASTRUCTURE PROJECT MANAGEMENT ADMINISTRATION
PROJECT MANAGEMENT DIVISION

KENNEDY STEET, N.W. IMPROVEMENT
FROM GEORGIA AVENUE TO NORTH CAPITOL STREET

LANDSCAPE PLANTING PLAN – 11

PROJECT ENG. ____
DESIGNED BY RM
CHECKED BY RMKF
DRAWN BY RMGRKS
PROJECT MGR. RM

DIVISION CHIEF
DATE ____
FILE pLD-P029-KennedyStreetImprovement
SHEET 68 OF 173

p:\60570\RHI\pLD-P029-KennedyStreetImprovement.dgn $PENTBLS$ $PLTDRVS$
Tuesday, July 28, 2015 AT 04:10 PM

REG	STATE	PROJECT	SHEET NO.	TOTAL SHEETS
3	D.C.	FAP No. STP-8888(480)	69	173

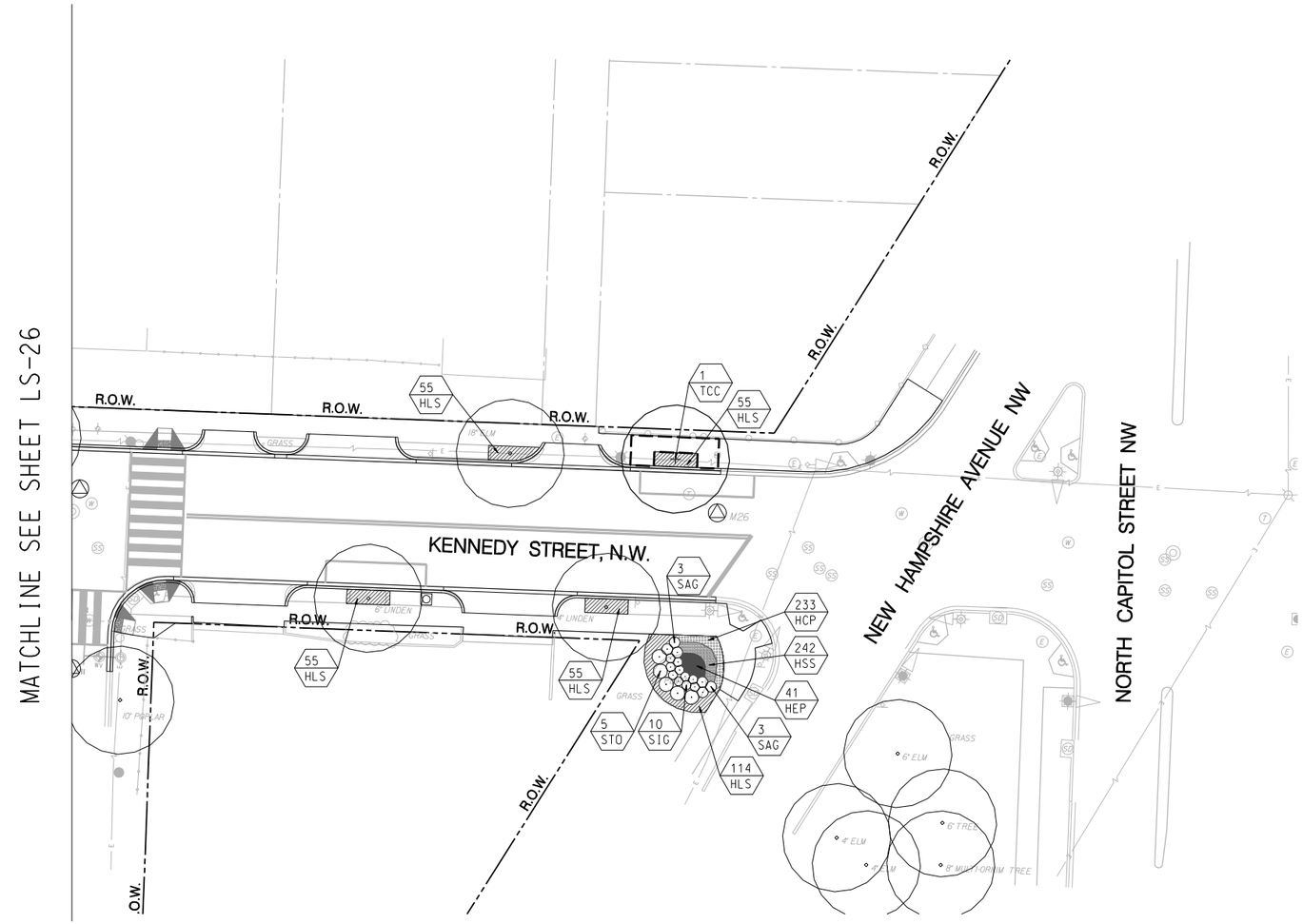

SYMBOL LEGEND

- EXISTING TREE TO REMAIN
- SHRUBS
- NEW TREE
- TREE ROOT ZONE/SAND BASED STRUCTURAL SOIL
- PROPOSED TURF
- 665 HLS — PLANT QUANTITY / PLANT SYMBOL
- RIGHT-OF-WAY LINE

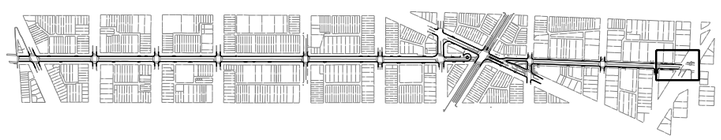

GRAPHIC SCALE

20 10 0 20 40

1" = 20'-0" HORIZ.

N

LS-30

D.C. DEPARTMENT OF TRANSPORTATION
INFRASTRUCTURE PROJECT MANAGEMENT ADMINISTRATION
PROJECT MANAGEMENT DIVISION

KENNEDY STEET, N.W. IMPROVEMENT
FROM GEORGIA AVENUE TO NORTH CAPITOL STREET

PROJECT ENG. ____
DESIGNED BY RM
CHECKED BY RMKF
DRAWN BY RM/GRKS
PROJECT MGR. RM

LANDSCAPE PLANTING PLAN – 12

DIVISION CHIEF
DATE ____
FILE #LD-P027-KennedyStreetImprovement
SHEET 69 OF 173

NO	DESCRIPTION	NAME	DATE

REVISIONS

RHODESIDE & HARWELL
916 King Street
Suite 200
Alexandria, VA 22314
703-683-7447 ph
703-683-7449 fx
www.rhodeside-harwell.com
Landscape Architecture and Planning

Precision Systems, Inc.
Engineers, Planners and Architects
WASHINGTON, D.C.

p:\60570\RHI\pLD-P030-KennedyStreetImprovement.dgn $PENTBLS$
Tuesday, July 28, 2015 AT 04:10 PM $PLTDRVS$

REG	STATE	PROJECT	SHEET NO.	TOTAL SHEETS
3	D.C.	FAP No. STP–8888(480)	70	173

RECOMMENDED: CHIEF IPMA SUPPORT DIVISION	STANDARD PLANTING DETAILS TREES - 1
APPROVED: CHIEF TRANSPORTATION ENGINEER	DISTRICT OF COLUMBIA DEPARTMENT OF TRANSPORTATION
DATE / APPR. / REVISED / ISSUED: / REFERENCE	DWG. NO. 611.10

RECOMMENDED: CHIEF IPMA SUPPORT DIVISION	STANDARD PLANTING DETAILS SHRUBS
APPROVED: CHIEF TRANSPORTATION ENGINEER	DISTRICT OF COLUMBIA DEPARTMENT OF TRANSPORTATION
DATE / APPR. / REVISED / ISSUED: / REFERENCE	DWG. NO. 611.15

SIDEWALK SECTION
* STEEPER SLOPE ALLOWED IF APPROVED BY DDOT IPMA.

NON-INTERLOCKING PAVERS OVER SAND-BASED STRUCTURAL SOIL
* STEEPER SLOPE ALLOWED IF APPROVED BY DDOT IPMA.

LEGEND

1. PERMEABLE INTERLOCKING CONCRETE PAVERS (PICP) OR SIMILAR, OR NON-INTERLOCKING PAVERS, AS NOTED.
2. BEDDING LAYER, AASHTO #8 OR APPROVED EQUIVALENT
3. DOUBLE WASHED AGGREGATE, AASHTO #57 OR APPROVED EQUIVALENT
4. CONCRETE EDGE RESTRAINT, MIN. 4" WIDE AND 7½" DEEP; MORTAR OR POLYMER ADHERED PAVERS TO TOP; ALTERNATIVELY, EXTEND EDGE RESTRAINT TO SURFACE. OTHER TYPES OF EDGE RESTRAINTS SUCH AS STEEL OR PLASTIC SHALL BE ALLOWED AS APPROVED BY THE ENGINEER AND BASED ON MANUFACTURER'S RECOMMENDATIONS.
5. UNCOMPACTED SUBGRADE FOR AREAS DESIGNED FOR INFILTRATION PRACTICES. FOR OTHER AREAS, COMPACT AS SPECIFIED IN SPECIFICATION CITED IN NOTE 2. FOR SOFT SOILS, INSTALL GEOGRID PER GEOTECHNICAL ENGINEER RECOMMENDATIONS. SEE NOTE 8 FOR ALTERNATE DESIGN.
6. JOINT TO HAVE 1/2 INCH MAXIMUM GAP IN ACCORDANCE WITH THE LATEST ADA REQUIREMENTS AND TO BE FILLED WITH AASHTO #8 OR APPROVED EQUIVALENT. MINIMUM GAP SHALL BE 1/4" OR PER MANUFACTURERS RECOMMENDATIONS FOR INTERLOCKING CONCRETE PAVERS.
7. GEOGRID, AS APPROVED BY DDOT
8. SAND-BASED STRUCTURAL SOIL (SBSS)

NOTES:

1. DETAIL TO BE USED ONLY WHEN APPROVED BY DDOT IPMA AND SHALL MEET CURRENT APPROVED DDOT SPECIFICATION FOR 'PERMEABLE UNIT PAVERS'.
2. AGGREGATE LAYERS SHALL MEET CURRENT APPROVED DDOT SPECIFICATION FOR 'AGGREGATES FOR PERMEABLE PAVEMENT AND BIORETENTION'.
3. WHERE INSITU SOILS ARE NOT CONDUCIVE TO INFILTRATION OF 1.2" OF RETENTION VOLUME WITHIN 72 HOURS, UNDERDRAINS SHOULD BE CONSIDERED THROUGH COORDINATION WITH DDOT IPMA .
4. WATERPROOF MEMBRANE TO BE USED TO PROMOTE WATER RE-USE, PROTECT NEARBY BUILDING FOUNDATIONS AND AVOID INFILTRATION AROUND UTILITIES. SEE DESIGN PLANS.
5. AGGREGATE DEPTH MAY BE GREATER THAN MINIMUM, AS SHOWN IN DESIGN PLANS TO ACHIEVE ADDITIONAL STORMWATER STORAGE.
6. BOTTOM OF PERNMEABLE PAVEMENT STRUCTURE SHALL BE AT LEAST 2' ABOVE THE SEASONAL HIGH WATER TABLE OR TO BEDROCK, AS DETERMINED BY GEOTECHNICAL INVESTIGATION.
7. TOP OF PAVEMENT SHOULD BE DESIGNED TO ACHIEVE 1% MINIMUM SLOPE IN ANY DIRECTION.
8. IN AREAS OF TREE PLANTINGS WHICH CALL FOR SAND-BASED STRUCTURAL SOIL (SSBS), THE SBSS MAY EXTEND UNDER THE AGGREGATE BASE LAYER OF THE SIDEWALK.

RECOMMENDED: DEPUTY CHIEF ENGINEER	PERMEABLE PAVER SIDEWALK
APPROVED: CHIEF TRANSPORTATION ENGINEER	DISTRICT OF COLUMBIA DEPARTMENT OF TRANSPORTATION
DATE / APPR / REVISED / ISSUED: / REFERENCE	DWG. NO. 621.06

SYMBOL	BOTANIC NAME	QTY	COMMON NAME	SIZE/CONTAINER	SPACING
TREES					
TCC	Carpinus caroliniana	7	American Hornbeam	2.5" CAL / B&B 7' CLEAR TRUNK	AS SHOWN
TCA	Cercis canadensis	2	Eastern Redbud	2.5" CAL / B&B 7' CLEAR TRUNK	AS SHOWN
TGT	Gleditsia triacanthos inermis 'Shademaster'	4	Shademaster Thornless Honeylocust	3.5" CAL / B&B 7' CLEAR TRUNK	AS SHOWN
TQA	Quercus palustris	1	Pin Oak	3.5" CAL / B&B 7' CLEAR TRUNK	AS SHOWN
TQP	Quercus phellos	8	Willow Oak	3.5" CAL / B&B 7' CLEAR TRUNK	AS SHOWN
TSR	Syringa reticulata	8	Japanese Tree Lilac	2.5" CAL / B&B 7' CLEAR TRUNK	AS SHOWN
TTC	Tilia cordata 'Greenspire'	6	Littleleaf Linden	3.5" CAL / B&B 7' CLEAR TRUNK	AS SHOWN
TUA	Ulmus americana 'New Harmony'	2	New Harmony Elm	3.5" CAL / B&B 7' CLEAR TRUNK	AS SHOWN
TUP	Ulmus parvifolia	4	Chinese Elm	2.5" CAL / B&B 7' CLEAR TRUNK	AS SHOWN
TZE	Zelkova serrata 'JFS-KW1'	7	City Sprite Zelkova	2.5" CAL / B&B 7' CLEAR TRUNK	AS SHOWN
TZS	Zelkova serrata 'Green Vase'	3	Zelkova	3.5" CAL / B&B 7' CLEAR TRUNK	AS SHOWN
SHRUBS					
SAG	Abelia grandiflora ' Prostrata'	37	Prostrate Glossy Abelia	12" HIGH X 24" WIDE	36" ON CENTER
SCA	Cornus alba 'Ivory Halo'	35	Tatarian Dogwood	24" HIGH X 24" WIDE	48" ON CENTER
SFG	Fothergilla gardenii	23	Dwarf Fothergilla	18" HIGH X 18" WIDE	30" ON CENTER
SIG	Ilex glabra 'Compacta'	193	Compact Inkberry	18" HIGH X 18" WIDE	30" ON CENTER
STO	Thuja occidentalis 'Pyramidalis'	14	Pyramidal Arborvitae	24" HIGH X 24" WIDE	48" ON CENTER
HERBACEOUS PERENNIALS, AND GRASSES					
HCP	Carex pensylvanica	2568	Pennsylvania Sedge	1 GAL CONTAINER	6" ON CENTER
HEP	Echinacea purpurea sp.	270	Coneflower	1 QT CONTAINER	12" ON CENTER
HLS	Liriope spicata	9554	Lilyturf	1 QT CONTAINER	12" ON CENTER
HSR	Solidago rugosa cvs.	246	Goldenrod	1 QT CONTAINER	12" ON CENTER
HSS	Salvia x sylvestris	722	Purple Salvia	1 GAL CONTAINER	6" ON CENTER
HYF	Yucca filamentosa	17	Adam's Needle	3 GAL CONTAINER	18" ON CENTER

RECOMMENDED: CHIEF IPMA SUPPORT DIVISION	STANDARD PLANTING DETAILS GROUND COVER & VINES
APPROVED: CHIEF TRANSPORTATION ENGINEER	DISTRICT OF COLUMBIA DEPARTMENT OF TRANSPORTATION
DATE / APPR. / REVISED / ISSUED: / REFERENCE	DWG. NO. 611.16

NOTES:
1. TREE SHALL BE INSTALLED PER DDOT STANDARD SPECIFIACTIONS, SECTION 608.02
2. TREE SOIL VOLUMES SHALL BE ACHIEVED PER DDOT GREEN INFRASTRUCTURE STANDARDS

RECOMMENDED: PROJECT MANAGER	STANDARD PLANTING DETAILS STREET TREE
APPROVED: CHIEF TRANSPORTATION ENGINEER	DISTRICT OF COLUMBIA DEPARTMENT OF TRANSPORTATION
DATE / APPR. / REVISED / ISSUED: / REFERENCE	DWG. NO. 608.02

LS-31

RHODESIDE & HARWELL
510 King Street
Suite 300
Alexandria, VA 22314
703-683-7447 ph
703-683-7449 fx
www.rhodeside-harwell.com
Landscape Architecture and Planning

Precision Systems, Inc.
Engineers, Planners and Architects
WASHINGTON, D.C.

NO.	DESCRIPTION	NAME	DATE

REVISIONS

D.C. DEPARTMENT OF TRANSPORTATION
INFRASTRUCTURE PROJECT MANAGEMENT ADMINISTRATION
PROJECT MANAGEMENT DIVISION

KENNEDY STEET, N.W. IMPROVEMENT
FROM GEORGIA AVENUE TO NORTH CAPITOL STREET

PROJECT ENG.
DESIGNED BY RM
CHECKED BY RM/KF
DRAWN BY RM/JR/KS
PROJECT MGR. RM

LANDSCAPE PLANTING DETAILS

DIVISION CHIEF
DATE
FILE pLD-P028-KennedyStreetImprovement

p:\60570\RHI\pLD-P031-KennedyStreetImprovement.dgn $PLTDRVS$ $PENTBLS$
Tuesday, July 28, 2015 AT 04:11 PM

REG	STATE	PROJECT	SHEET NO.	TOTAL SHEETS
3	D.C.	FAP No. STP-8888(480)	71	173

NOTES:

1. THE LOCATION OF THE UTILITIES SHOWN ON THE PLANS ARE BASED ON FIELD SURVEY DATA/OR RECORD DRAWINGS ON THE ORIGINAL LOCATIONS. THE INFORMATION SHOWN IS NOT NECESSARILY COMPLETE AND LOCATIONS OF THE UTILITIES SHOWN IS APPROXIMATE. IT SHALL BE THE RESPONSIBILITY OF THE CONTRACTOR TO VERIFY THE EXISTENCE OF ALL UTILITIES WELL IN ADVANCE OF CONDUCTING CONSTRUCTION OPERATIONS WHICH COULD DAMAGE THESE FACILITIES. IN THE AREAS WHERE PROPOSED CONSTRUCTION MAY CONFLICT WITH EXISTING UTILITIES. THE CONTRACTOR SHALL TAKE ALL NECESSARY PRECAUTIONS TO AVOID DAMAGE TO EXISTING UTILITIES. IF AN UNDERGROUND UTILITY IS DAMAGED. THE CONTRACTOR SHALL IMMEDIATELY NOTIFY THE ENGINEER AND THE OWNER OF SAID UTILITY. ANY DAMAGE SUSTAINED TO UTILITIES ABOVE OR BELOW GROUND SHALL BE REPAIRED BY OR UNDER THE DIRECTION OF THE UTILITY OWNER AT CONTRACTOR EXPENSE. UNDER NO CIRCUMSTANCES SHALL THE CONTRACTOR BACK FILL AN EXCAVATION AFFECTING SAID UTILITY WITHOUT FIRST RECEIVING PERMISSION FROM THE UTILITY OWNER.
2. CONTRACTOR SHALL EXCAVATE AND LOCATE VERTICALLY AND HORIZONTALLY ALL OTHER UTILITIES IN CLOSE PROXIMITY TO THE PROPOSED CATCH BASINS AND SEWER LINES.
3. PLACE BULKHEADS AT ALL OPEN ENDS OF SEWERS TO BE ABANDONED. SEE DC WATER SPECIFICATION 33 01 20 FOR PIPELINE AND MANHOLE ABANDONMENT REQUIREMENTS.
4. REMOVE FRAME AND COVERS OF SEWER MANHOLES TO BE ABANDONED AND FILL TO THE GRADE. SEE DC WATER SPECIFICATION 33 01 20 FOR PIPELINE AND MANHOLE ABANDONMENT REQUIREMENTS.
5. IF CONNECTIONS FROM BASINS TO BE CONVERTED (BUILT), ARE FOUND DURING CONSTRUCTION TO BE SMALLER THAN 15-INCH DIA., REPLACE BASIN CONNECTION WITH 15-INCH DIA. R.C.P.R.S. CLASS III WITH RUBBER GASKET BASIN CONNECTION.
6. NOTIFY MISS UTILITY AT 1-800-257-7777, 48 HOURS PRIOR TO EXCAVATION.
7. ALL EXISTING DC WATER ITEMS SUCH AS CATCH BASIN TOPS, MANHOLE FRAMES AND COVERS NOT REUSED SHALL BE SALVAGED AND RETURN TO DC WATER YARD.
8. THE CONTRACTOR SHALL HAND DIG TEST PITS AT ALL GAS CROSSINGS TO DETERMINE THE EXACT LOCATIONS AND DEPTH WELL IN ADVANCE OF CONSTRUCTION.
9. ALL CATCH BASINS TO BE BUILT WITH WATER SEALS.
10. THE CONTRACTOR SHALL NOTIFY PEPCO 48 HOURS (TWO WORKING DAYS) PRIOR TO MAKING REPAIRS TO THE ROADWAY BASE IN THE VICINITY OF PEPCO'S UNDERGROUND FACILITIES. AN INSPECTOR WILL BE PROVIDED TO MAINTAIN PEPCO'S FACILITIES. THE CONTACTOR IS TO WORK WITH PEPCO'S INSPECTOR TO MAINTAIN PEPCO'S FACILITIES.
11. THE CONTRACTOR SHALL NOTIFY PEPCO OF POLES IN CONFLICT WITH PROPOSED CURB CONSTRUCTION. THE CONTRACTOR SHALL ALSO ALLOW A MINIMUM OF SIX WEEKS IN HIS SCHEDULE FOR PEPCO TO PREPARE A JOB AND START WORK TO REMOVE THE POLES. THE CONTRACTOR SHALL ALLOW IN HIS SCHEDULE FOR OTHER UTILITIES (COMCAST, VERIZON, WASHINGTON GAS) TO RELOCATE THEIR FACILITIES TO THE NEW POLE.
12. THE UTILITY POLE RELOCATION WORK SHALL BE DONE BY THE UTILITY OWNERS.
13. ANY HOUSE SERVICE CONNECTIONS AFFECTED BY CONSTRUCTION WILL BE RELOCATED AND RESTORED. WATER AND SEWER CONNECTIONS MUST BE INSTALLED PERPENDICULAR TO THE PROPERTY LINE FROM THE MAIN TO THE PROPERTY LINE AND MAY NOT BE OFFSET AROUND PROPOSED CONSTRUCTION.
14. AT LOCATIONS WHERE EXISTING STORM DRAIN PIPES ARE TO BE USED, THE PIPES WILL BE FIELD VERIFIED. IF THE EXISTING PIPE IS LESS THAN 15" DIAMETER, THEN IT WILL BE REPLACED WITH A 15" DIAMETER PIPE.
15. CONTRACTOR WILL FIELD VERIFY THE LOCATION OF EXISTING WATER MAINS AND IF IN CONFLICT, THE CONTRACTOR SHALL RELOCATE THE PROPOSED CATCH BASINS.

UTILITY NOTES: WATER SEAL (TYP.)

1. 15" DIA. CATCH BASIN CONNECT PIPE SHALL BE CONNECTED TO ALL CATCH BASINS WITH THE WATER SEAL.
2. GRAY-IRON CASTINGS FOR WATER SEAL SHALL BE PER AASHTO M105, CLASS 30A.
3. ALL MACHINE FINISH TO BE A.S.A. SPECIFICATION,ROUGHNESS SYMBOL 250. TOLERANCE -0" +1/16".
4. WHEN THE CATCH BASIN CONNECTION PIPE IS NOT PERPENDICULAR TO THE CATCH BASIN WALL, THE WALL SHALL BE MODIFIED TO INSTALL WATER SEAL ON SAME ALIGNMENT AS THE CATCH BASIN PIPE.
5. ALL CATCH BASINS AND SEWER PIPES SHALL BE BUILT IN ACCORDANCE WITH DC WATER SPECIFICATIONS.

GRAPHIC SCALE
20 10 0 20 40
1" = 20'-0" HORIZ.

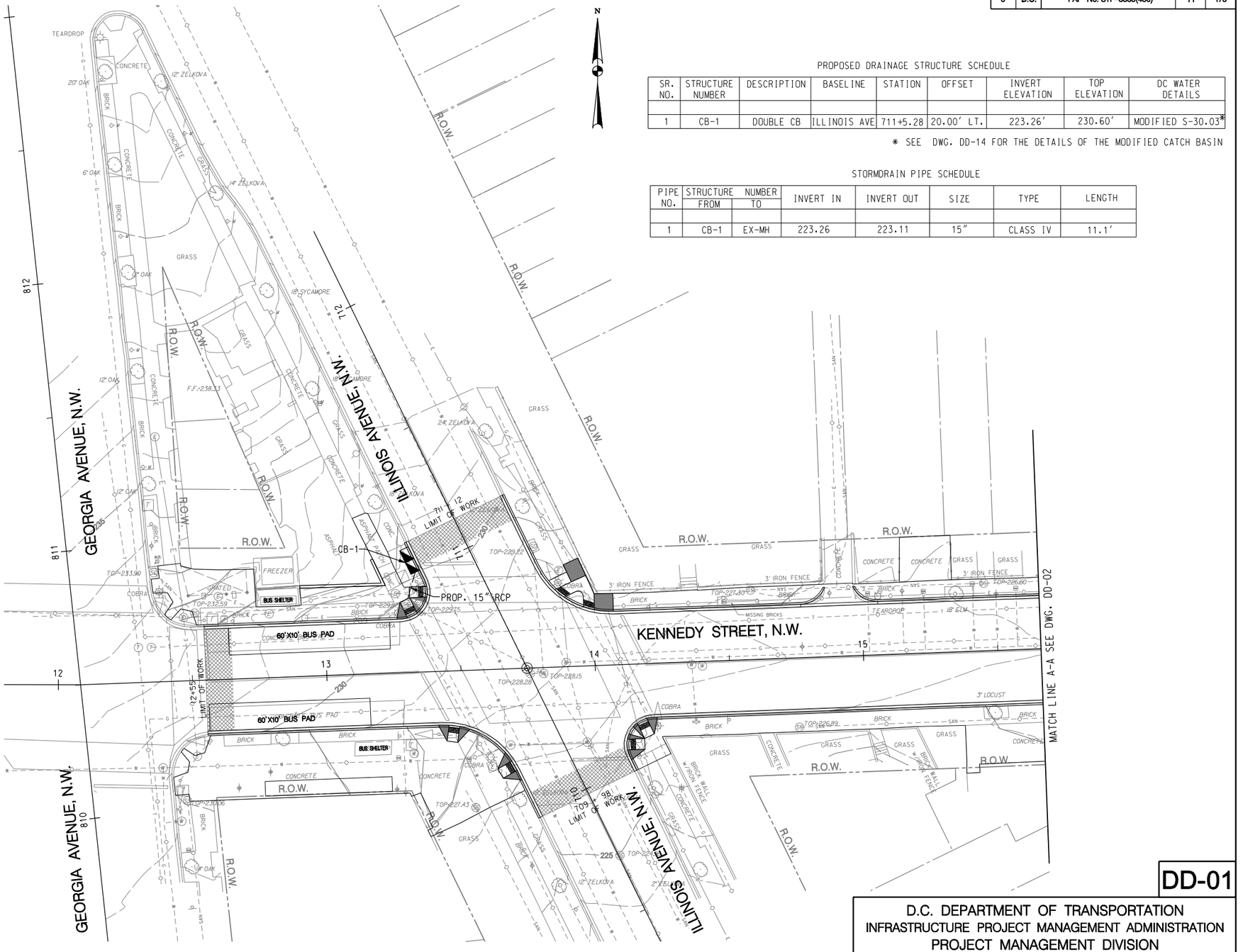

PROPOSED DRAINAGE STRUCTURE SCHEDULE

SR. NO.	STRUCTURE NUMBER	DESCRIPTION	BASELINE	STATION	OFFSET	INVERT ELEVATION	TOP ELEVATION	DC WATER DETAILS
1	CB-1	DOUBLE CB	ILLINOIS AVE	711+5.28	20.00' LT.	223.26'	230.60'	MODIFIED S-30.03*

* SEE DWG. DD-14 FOR THE DETAILS OF THE MODIFIED CATCH BASIN

STORMDRAIN PIPE SCHEDULE

PIPE NO.	STRUCTURE NUMBER FROM	STRUCTURE NUMBER TO	INVERT IN	INVERT OUT	SIZE	TYPE	LENGTH
1	CB-1	EX-MH	223.26	223.11	15"	CLASS IV	11.1'

Engineers, Architects Development Consultants
SHELADIA ASSOCIATES, INC.
15825 Shady Grove Road, Rockville, MD. 20850
Phone: 301-590-3939 Fax:301-948-7174
www.sheladia.com

Precision Systems, Inc.
Engineers, Planners and Architects
WASHINGTON, D.C.

NO	DESCRIPTION	NAME	DATE

REVISIONS

DD-01

D.C. DEPARTMENT OF TRANSPORTATION
INFRASTRUCTURE PROJECT MANAGEMENT ADMINISTRATION
PROJECT MANAGEMENT DIVISION

KENNEDY STREET, N.W. IMPROVEMENT
FROM GEORGIA AVENUE TO NORTH CAPITOL STREET

PROJECT ENG. ____
DESIGNED BY SZ
CHECKED BY SS
DRAWN BY BH
PROJECT MGR. TS

DRAINAGE PLAN

DIVISION CHIEF
DATE ____
FILE ____
SHEET 71 OF 173

$PLTDRVL$
$PENTBL$
Tuesday, July 28, 2015 AT 05:28 PM
$FILEL$
$SHEETSIZE$$SCALESHORT$

REG	STATE	PROJECT	SHEET NO.	TOTAL SHEETS
3	D.C.	FAP No. STP-8888(480)	72	173

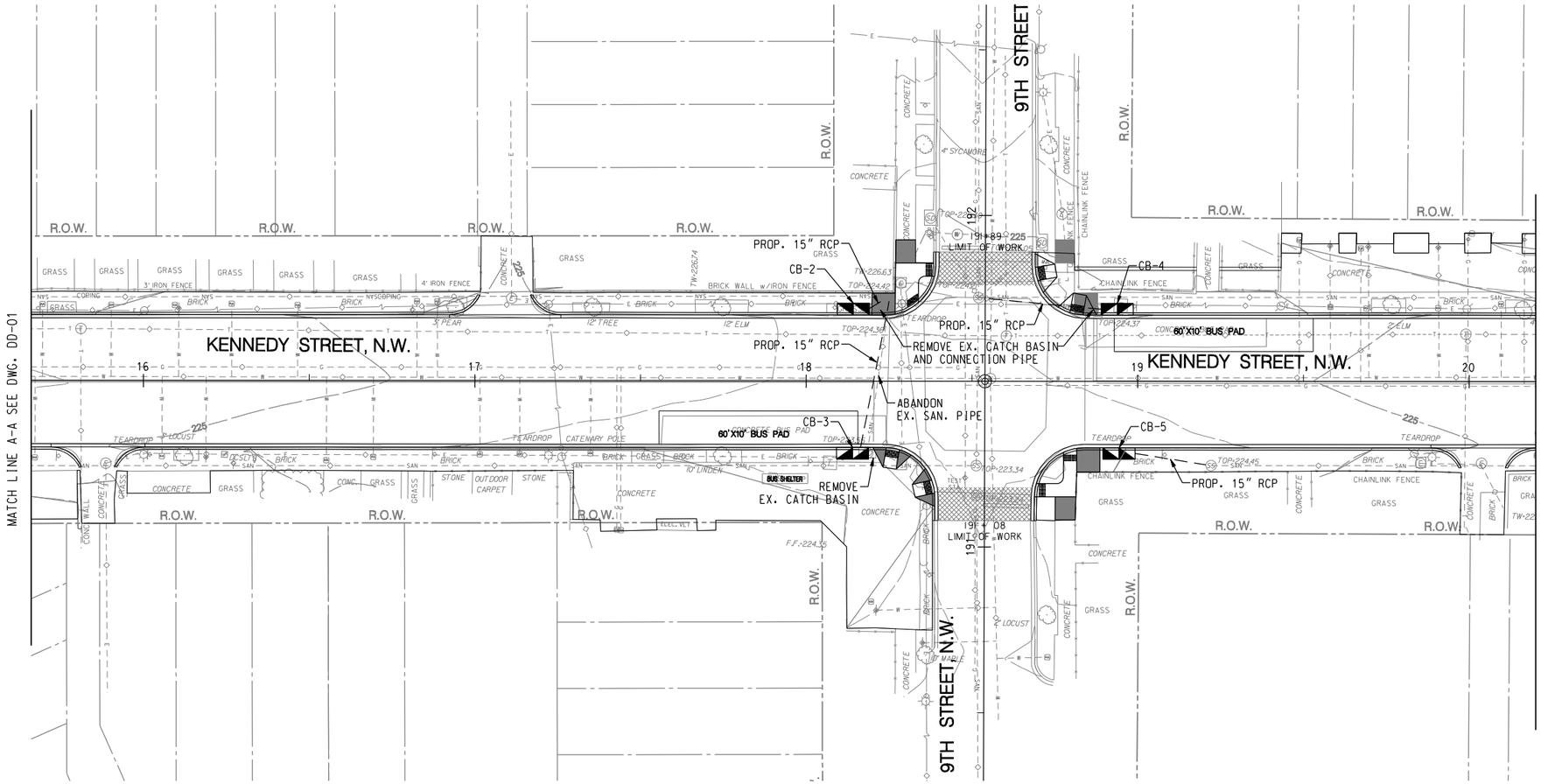

PROPOSED DRAINAGE STRUCTURE SCHEDULE

SR. NO.	STRUCTURE NUMBER	DESCRIPTION	BASELINE	STATION	OFFSET	INVERT ELEVATION	TOP ELEVATION	DC WATER DETAILS
1	CB-2	DOUBLE CB	KENNEDY ST	18+14.18	20.00' LT.	219.48	224.31	S-30.03
2	CB-3	DOUBLE CB	KENNEDY ST	18+13.98	20.00' RT.	218.70	223.53	S-30.03
3	CB-4	DOUBLE CB	KENNEDY ST	18+93.85	20.00' LT.	217.05	224.38	MODIFIED S-30.03*
4	CB-5	DOUBLE CB	KENNEDY ST	18+94.41	20.00' RT.	219.15	223.98	S-30.03

STORMDRAIN PIPE SCHEDULE

PIPE NO.	STRUCTURE NUMBER FROM	STRUCTURE NUMBER TO	INVERT IN	INVERT OUT	SIZE	TYPE	LENGTH
1	CB-2	EX-MH	219.48	219.40	15" RCP	CLASS IV	6.0'
2	CB-3	EX-MH	218.70	217.82	15" RCP	CLASS IV	45.2'
3	CB-4	EX-MH	217.05	216.70	15" RCP	CLASS IV	35.9'
4	CB-5	EX-MH	219.15	218.93	15" RCP	CLASS IV	21.9'

* SEE DWG. DD-14 FOR THE DETAILS OF THE MODIFIED CATCH BASIN

GRAPHIC SCALE
20 10 0 20 40
1" = 20'-0" HORIZ.

SHELADIA ASSOCIATES, INC.
Engineers, Architects Development Consultants
15825 Shady Grove Road, Rockville, MD. 20850
Phone: 301-590-3939 Fax:301-948-7174
www.sheladia.com

PSI
Precision Systems, Inc.
Engineers, Planners and Architects
WASHINGTON, D.C.

NO	DESCRIPTION	NAME	DATE

REVISIONS

DD-02

D.C. DEPARTMENT OF TRANSPORTATION
INFRASTRUCTURE PROJECT MANAGEMENT ADMINISTRATION
PROJECT MANAGEMENT DIVISION

KENNEDY STREET, N.W. IMPROVEMENT
FROM GEORGIA AVENUE TO NORTH CAPITOL STREET

PROJECT ENG. ____
DESIGNED BY SZ
CHECKED BY SS
DRAWN BY BH
PROJECT MGR. TS

DRAINAGE PLAN

DIVISION CHIEF
DATE ____
FILE ____
SHEET 72 OF 173

$PLTDRVL$
$PENTBL$
Tuesday, July 28, 2015 AT 05:29 PM
$FILEL$
$SHEETSIZE$$SCALESHORT$

REG	STATE	PROJECT	SHEET NO.	TOTAL SHEETS
3	D.C.	FAP No. STP-8888(480)	73	173

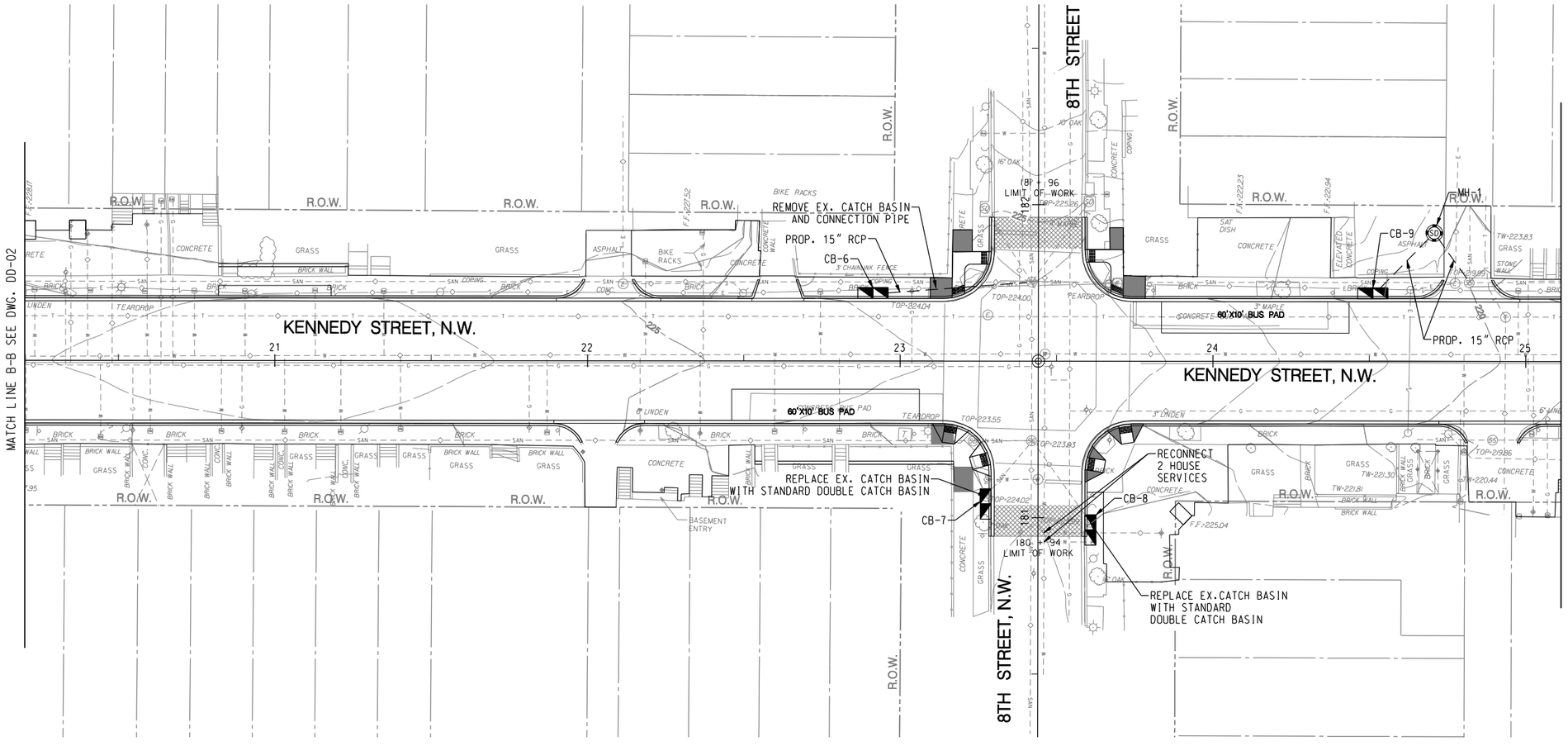

PROPOSED DRAINAGE STRUCTURE SCHEDULE

SR. NO.	STRUCTURE NUMBER	DESCRIPTION	BASELINE	STATION	OFFSET	INVERT ELEVATION	TOP ELEVATION	DC WATER DETAILS
1	CB-6	DOUBLE CB	KENNEDY ST	22+91.26	20.00' LT.	216.97	224.31	S-30.03
2	CB-7	DOUBLE CB	8TH STREET	181+04.33	15.00' LT.	*	224.00	S-30.03
3	CB-8	DOUBLE CB	8TH STREET	180+96.07	15.00' RT.	*	224.02	S-30.03
4	CB-9	DOUBLE CB	KENNEDY ST	24+51.12	20.00' LT.	216.28	221.11	S-30.03
5	MH-1	MANHOLE	KENNEDY ST	24+70.74	41.04' LT.	216.05/214.68	221.62	S-20.01

* EX. SD PIPE TO REMAIN

STORMDRAIN PIPE SCHEDULE

PIPE NO.	STRUCTURE NUMBER FROM	STRUCTURE NUMBER TO	INVERT IN	INVERT OUT	SIZE	TYPE	LENGTH
1	CB-6	EX-MH	216.97	216.52	15" RCP	CLASS IV	44.8'
2	CB-9	MH-1	216.28	216.05	15" RCP	CLASS IV	23.2'
3	MH-1	EX-MH	214.68	214.46	15" RCP	CLASS IV	15.5'

GRAPHIC SCALE
20 10 0 20 40
1" = 20'-0" HORIZ.

SHELADIA ASSOCIATES, INC.
Engineers, Architects
Development Consultants
15825 Shady Grove Road, Rockville, MD. 20850
Phone: 301-590-3939 Fax:301-948-7174
www.sheladia.com

Precision Systems, Inc.
Engineers, Planners and Architects
WASHINGTON, D.C.

NO	DESCRIPTION	NAME	DATE
	REVISIONS		

DD-03

D.C. DEPARTMENT OF TRANSPORTATION
INFRASTRUCTURE PROJECT MANAGEMENT ADMINISTRATION
PROJECT MANAGEMENT DIVISION

KENNEDY STREET, N.W. IMPROVEMENT
FROM GEORGIA AVENUE TO NORTH CAPITOL STREET

PROJECT ENG. ____
DESIGNED BY SZ
CHECKED BY SS
DRAWN BY BH
PROJECT MGR. TS

DRAINAGE PLAN

DIVISION CHIEF
DATE ____
FILE ____
SHEET 73 OF 173

$PLTDRVL$
$PENTBL$
Tuesday, July 28, 2015 AT 05:29 PM
$FILEL$
$SHEETSIZE$$SCALESHORT$

REG	STATE	PROJECT	SHEET NO.	TOTAL SHEETS
3	D.C.	FAP No. STP-8888(480)	74	173

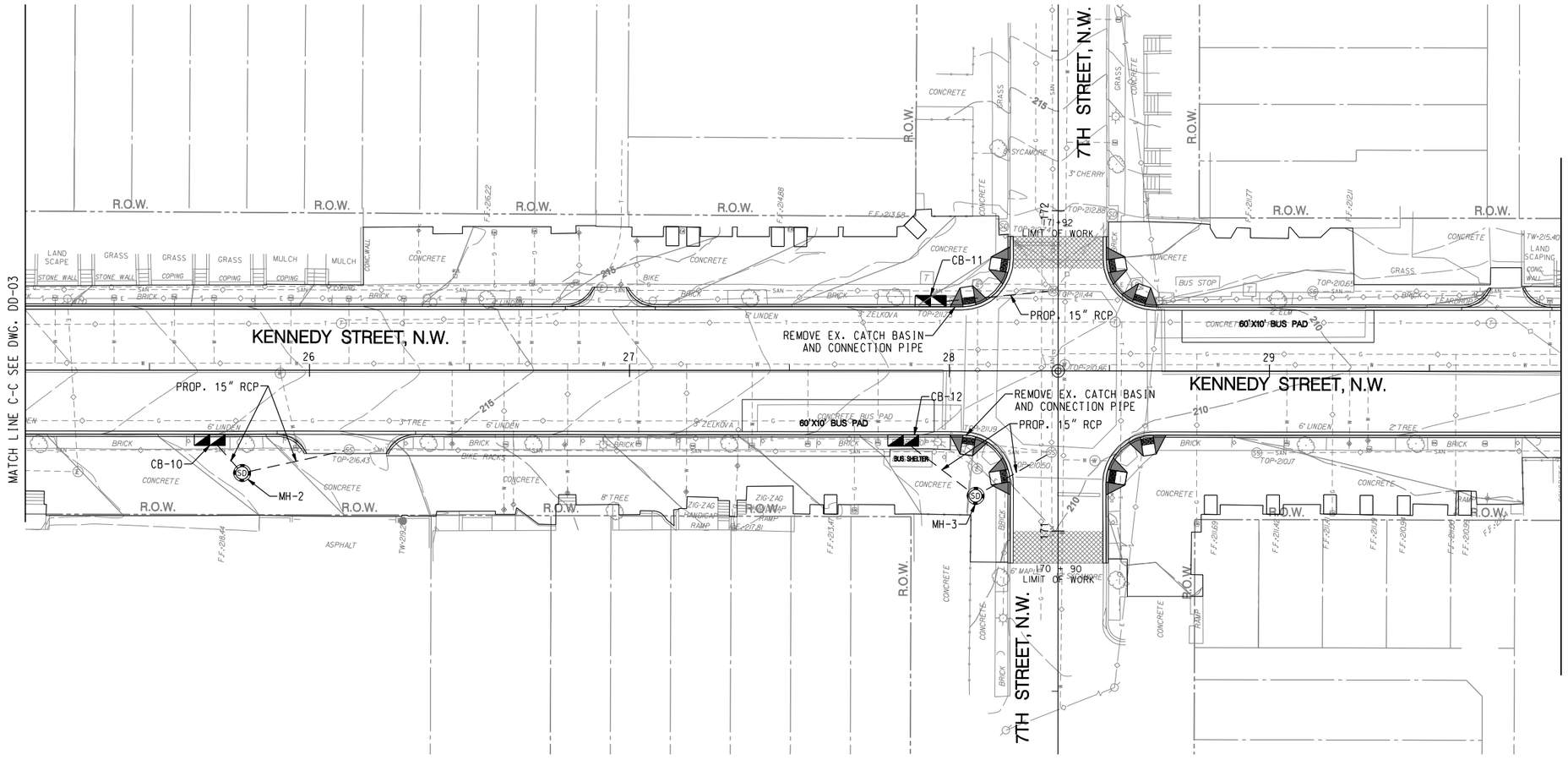

PROPOSED DRAINAGE STRUCTURE SCHEDULE

SR. NO.	STRUCTURE NUMBER	DESCRIPTION	BASELINE	STATION	OFFSET	INVERT ELEVATION	TOP ELEVATION	DC WATER DETAILS
1	CB-10	DOUBLE CB	KENNEDY ST	25+68.85	20.00' RT.	212.73	217.56	S-30.03
2	MH-2	MANHOLE	KENNEDY ST	25+79.00	32.08' RT.	212.6/212.42	217.75	S-20.01
3	CB-11	DOUBLE CB	KENNEDY ST	27+94.10	20.00' LT.	207.07	211.90	S-30.03
4	CB-12	DOUBLE CB	KENNEDY ST	27+85.57	20.00' RT.	206.83	211.66	S-30.03
5	MH-3	MANHOLE	KENNEDY ST	28+08.23	39.02' RT.	206.60/204.62	210.87	S-20.01

STORMDRAIN PIPE SCHEDULE

PIPE NO.	STRUCTURE NUMBER FROM	STRUCTURE NUMBER TO	INVERT IN	INVERT OUT	SIZE	TYPE	LENGTH
1	CB-10	MH-2	212.73	212.60	15" RCP	CLASS IV	10.2'
2	MH-2	EX-MH	212.42	212.10	15" RCP	CLASS IV	30.2'
3	CB-11	EX-MH	207.07	206.75	15" RCP	CLASS IV	32.3'
4	CB-12	MH-3	206.83	206.60	15" RCP	CLASS IV	24.2'
5	MH-3	EX-MH	204.62	204.37	15" RCP	CLASS IV	23.3'

GRAPHIC SCALE
20 10 0 20 40
1" = 20'-0" HORIZ.

SHELADIA ASSOCIATES, INC.
Engineers, Architects Development Consultants
15825 Shady Grove Road, Rockville, MD. 20850
Phone: 301-590-3939 Fax:301-948-7174
www.sheladia.com

Precision Systems, Inc.
Engineers, Planners and Architects
WASHINGTON, D.C.

NO.	DESCRIPTION	NAME	DATE

REVISIONS

DD-04

D.C. DEPARTMENT OF TRANSPORTATION
INFRASTRUCTURE PROJECT MANAGEMENT ADMINISTRATION
PROJECT MANAGEMENT DIVISION

KENNEDY STREET, N.W. IMPROVEMENT
FROM GEORGIA AVENUE TO NORTH CAPITOL STREET

PROJECT ENG. ____
DESIGNED BY SZ
CHECKED BY SS
DRAWN BY BH
PROJECT MGR. TS

DRAINAGE PLAN

DIVISION CHIEF
DATE ____
FILE ____
SHEET 74 OF 173

$PENTBL$
Tuesday, July 28, 2015 AT 05:29 PM
$PLTORVL$
$FILEL$
$SHEETSIZE$$SCALESHORT$

REG	STATE	PROJECT	SHEET NO.	TOTAL SHEETS
3	D.C.	FAP No. STP-8888(480)	75	173

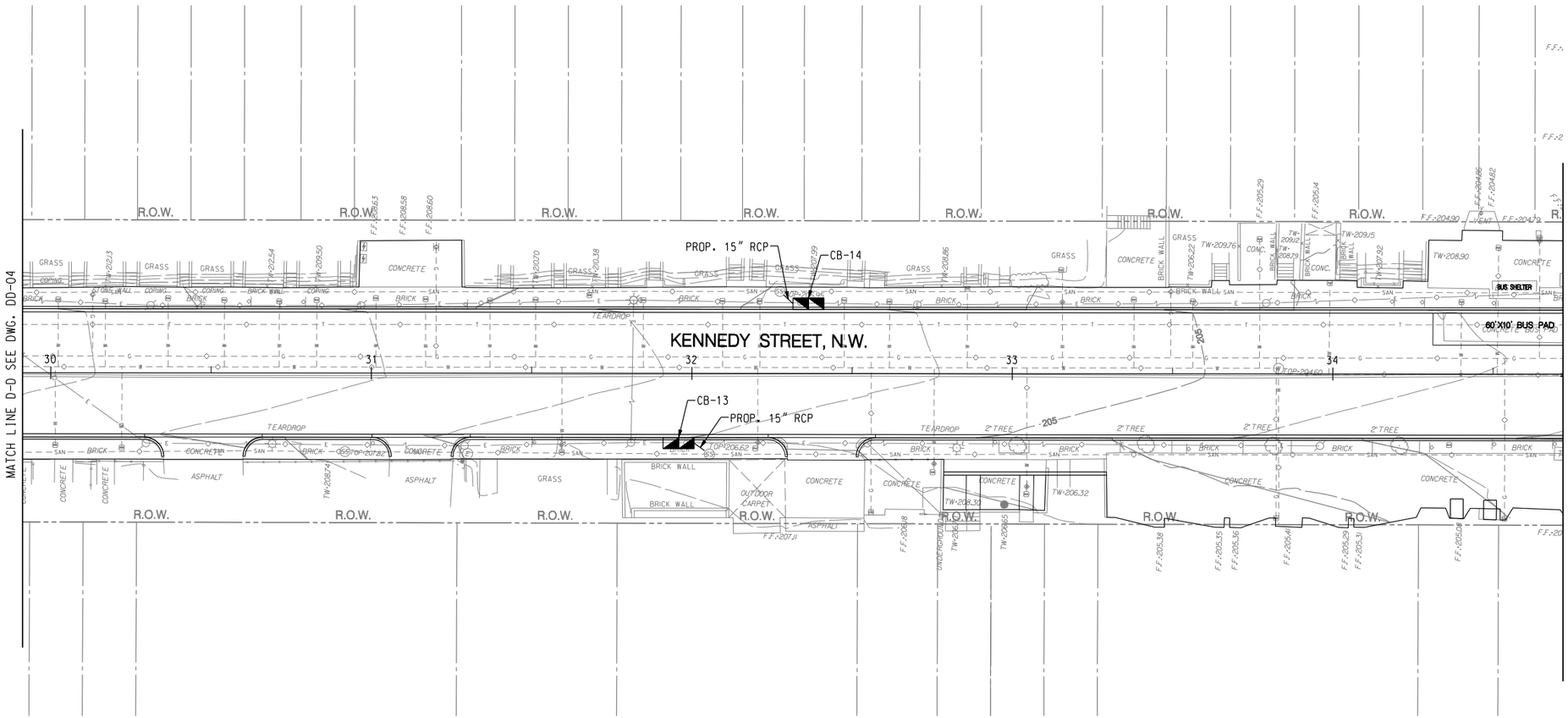

PROPOSED DRAINAGE STRUCTURE SCHEDULE

SR. NO.	STRUCTURE NUMBER	DESCRIPTION	BASELINE	STATION	OFFSET	INVERT ELEVATION	TOP ELEVATION	DC WATER DETAILS
1	CB-13	DOUBLE CB	KENNEDY ST	31+95.88	20.00' RT.	201.71	206.54	S-30.03
2	CB-14	DOUBLE CB	KENNEDY ST	32+36.35	20.00' LT.	201.94	206.77	S-30.03

STORMDRAIN PIPE SCHEDULE

PIPE NO.	STRUCTURE NUMBER FROM	STRUCTURE NUMBER TO	INVERT IN	INVERT OUT	SIZE	TYPE	LENGTH
1	CB-13	EX-MH	201.71	201.66	15" RCP	CLASS IV	4.60'
2	CB-14	EX-MH	201.94	201.90	15" RCP	CLASS IV	4.30'

GRAPHIC SCALE
20 10 0 20 40
1" = 20'-0" HORIZ.

SHELADIA ASSOCIATES, INC.
Engineers, Architects
Development Consultants
15825 Shady Grove Road, Rockville, MD. 20850
Phone: 301-590-3939 Fax:301-948-7174
www.sheladia.com

PSI
Precision Systems, Inc.
Engineers, Planners and Architects
WASHINGTON, D.C.

NO	DESCRIPTION	NAME	DATE

REVISIONS

DD-05

D.C. DEPARTMENT OF TRANSPORTATION
INFRASTRUCTURE PROJECT MANAGEMENT ADMINISTRATION
PROJECT MANAGEMENT DIVISION

KENNEDY STREET, N.W. IMPROVEMENT
FROM GEORGIA AVENUE TO NORTH CAPITOL STREET

PROJECT ENG. ____
DESIGNED BY SZ
CHECKED BY SS
DRAWN BY BH
PROJECT MGR. TS

DRAWING TITLE: DRAINAGE PLAN

DIVISION CHIEF
DATE ____
FILE ____
SHEET 75 OF 173

$PLTDRVL$
$PENTBL$
Tuesday, July 28, 2015 AT 05:30 PM
$FILEL$
$SHEETSIZE$$SCALESHORT$

REG	STATE	PROJECT	SHEET NO.	TOTAL SHEETS
3	D.C.	FAP No. STP-8888(480)	76	173

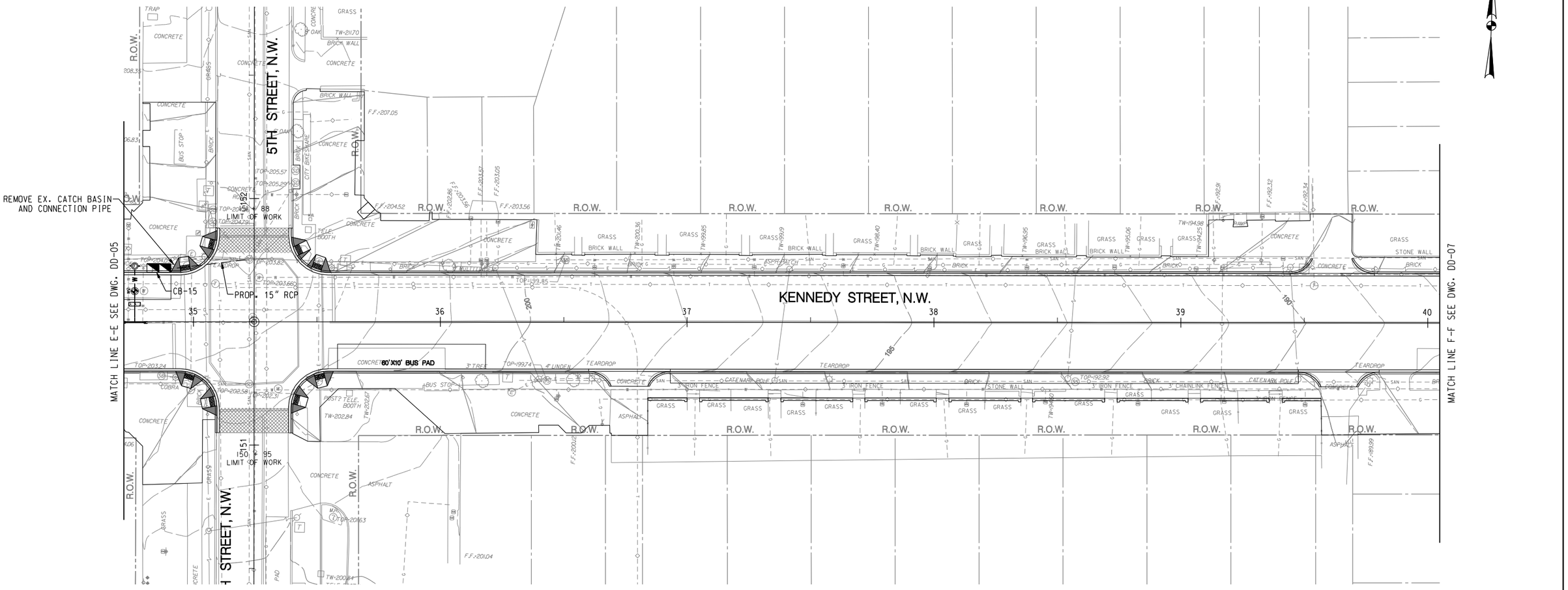

PROPOSED DRAINAGE STRUCTURE SCHEDULE

SR. NO.	STRUCTURE NUMBER	DESCRIPTION	BASELINE	STATION	OFFSET	INVERT ELEVATION	TOP ELEVATION	DC WATER DETAILS
1	CB-15	DOUBLE CB	KENNEDY ST	34+85.96	20.00' LT.	199.22	204.05	S-30.03

STORMDRAIN PIPE SCHEDULE

PIPE NO.	STRUCTURE NUMBER FROM	STRUCTURE NUMBER TO	INVERT IN	INVERT OUT	SIZE	TYPE	LENGTH
1	CB-15	EX-MH	199.22	196.52	15" RCP	CLASS IV	31.60'

GRAPHIC SCALE
20 10 0 20 40
1" = 20'-0" HORIZ.

SHELADIA ASSOCIATES, INC.
Engineers, Architects Development Consultants
15825 Shady Grove Road, Rockville, MD. 20850
Phone: 301-590-3939 Fax:301-948-7174
www.sheladia.com

PSI
Precision Systems, Inc.
Engineers, Planners and Architects
WASHINGTON, D.C.

NO.	DESCRIPTION	NAME	DATE

REVISIONS

DD-06

D.C. DEPARTMENT OF TRANSPORTATION
INFRASTRUCTURE PROJECT MANAGEMENT ADMINISTRATION
PROJECT MANAGEMENT DIVISION

KENNEDY STREET, N.W. IMPROVEMENT
FROM GEORGIA AVENUE TO NORTH CAPITOL STREET

PROJECT ENG. ____
DESIGNED BY SZ
CHECKED BY SS
DRAWN BY BH
PROJECT MGR. TS

DRAINAGE PLAN

DIVISION CHIEF
DATE ____
FILE ____
SHEET 76 OF 173

$PLTDRVL$
$PENTBL$
Tuesday, July 28, 2015 AT 05:30 PM
$FILEL$
$SHEETSIZE$$SCALESHORT$

REG	STATE	PROJECT	SHEET NO.	TOTAL SHEETS
3	D.C.	FAP No. STP-8888(480)	77	173

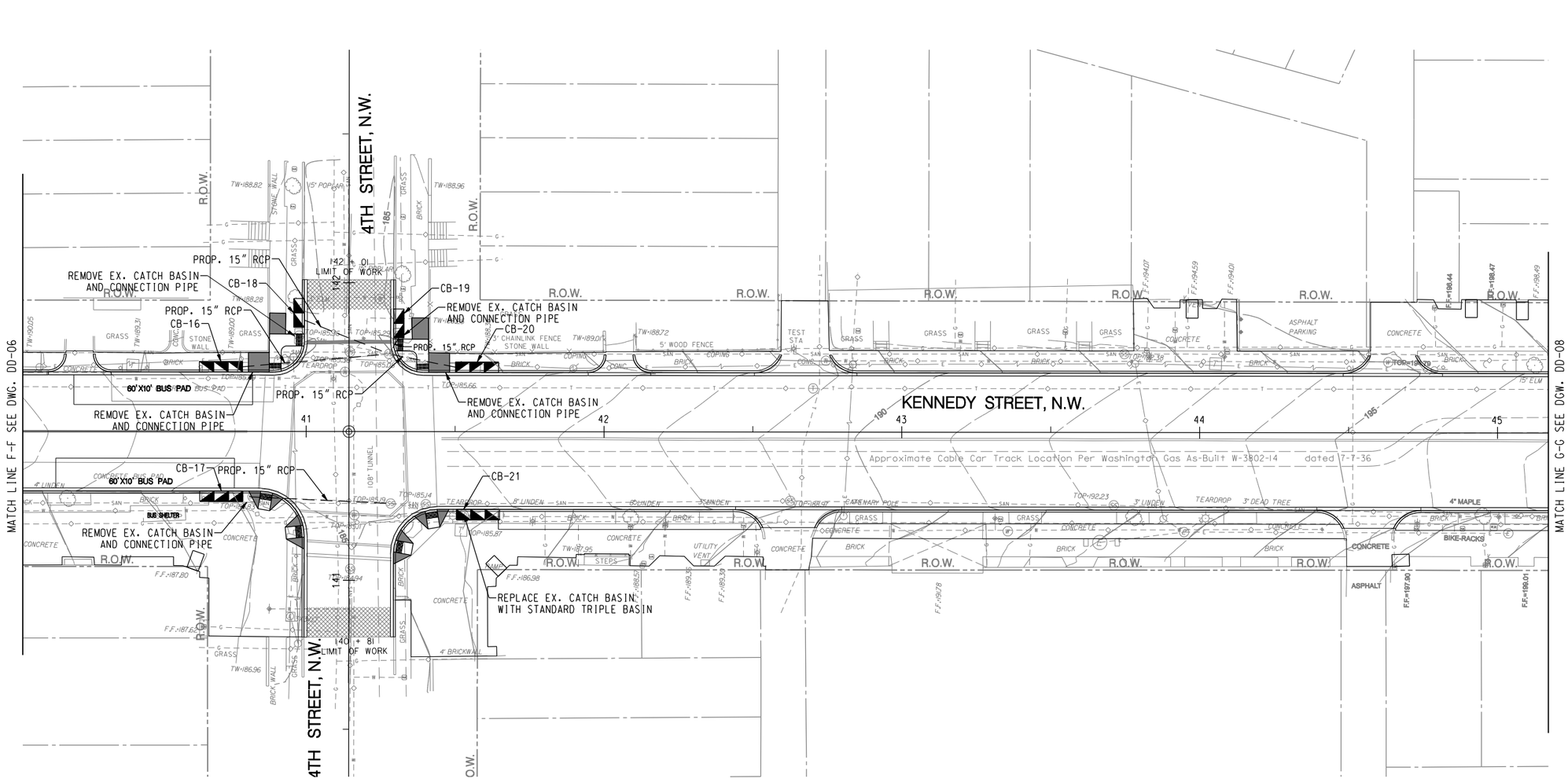

PROPOSED DRAINAGE STRUCTURE SCHEDULE

SR. NO.	STRUCTURE NUMBER	DESCRIPTION	BASELINE	STATION	OFFSET	INVERT ELEVATION	TOP ELEVATION	DC WATER DETAILS
1	CB-16	TRIPLE CB	KENNEDY ST	40+71.34	20.00' LT.	178.86	186.20	MODIFIED S-30.03 *
2	CB-17	TRIPLE CB	KENNEDY ST	40+71.53	20.00' RT.	178.28	186.12	MODIFIED S-30.03 *
3	CB-18	DOUBLE CB	4TH STREET	141+89.83	15.00' LT.	180.57	185.40	S-30.03
4	CB-19	DOUBLE CB	4TH STREET	141+86.35	15.00' RT.	180.47	185.30	S-30.03
5	CB-20	TRIPLE CB	KENNEDY ST	41+57.36	19.91' LT.	180.91	185.74	S-30.03
6	CB-21	TRIPLE CB	KENNEDY ST	41+57.74	26.09' RT.	181.10	185.93	S-30.03

* SEE DWG. DD-14 FOR THE DETAILS OF THE MODIFIED CATCH BASIN

STORMDRAIN PIPE SCHEDULE

PIPE NO.	STRUCTURE NUMBER FROM	STRUCTURE NUMBER TO	INVERT IN	INVERT OUT	SIZE	TYPE	LENGTH
1	CB-16	EX-MH	178.86	178.00	15" RCP	CLASS IV	48.1'
2	CB-17	EX-MH	178.28	177.80	15" RCP	CLASS IV	48.4'
3	CB-18	EX-MH	180.57	179.31	15" RCP	CLASS IV	29.3'
4	CB-19	EX-MH	180.47	180.42	15" RCP	CLASS IV	5.0'
5	CB-20	EX-MH	180.91	179.99	15" RCP	CLASS IV	21.4'

GRAPHIC SCALE
20 10 0 20 40
1" = 20'-0" HORIZ.

SHELADIA ASSOCIATES, INC.
Engineers, Architects Development Consultants
15825 Shady Grove Road, Rockville, MD. 20850
Phone: 301-590-3939 Fax: 301-948-7174
www.sheladia.com

PSI
Precision Systems, Inc.
Engineers, Planners and Architects
WASHINGTON, D.C.

NO.	DESCRIPTION	NAME	DATE

REVISIONS

DD-07

D.C. DEPARTMENT OF TRANSPORTATION
INFRASTRUCTURE PROJECT MANAGEMENT ADMINISTRATION
PROJECT MANAGEMENT DIVISION

KENNEDY STREET, N.W. IMPROVEMENT
FROM GEORGIA AVENUE TO NORTH CAPITOL STREET

PROJECT ENG. ____
DESIGNED BY SZ
CHECKED BY SS
DRAWN BY BH
PROJECT MGR. TS

DRAINAGE PLAN

DIVISION CHIEF
DATE ____
FILE ____
SHEET 77 OF 173

$PLTDRVL$
$PENTBL1$
Tuesday, July 28, 2015 AT 05:31 PM
$FILE1$
$SHEETSIZE$$SCALESHORT$

REG	STATE	PROJECT	SHEET NO.	TOTAL SHEETS
3	D.C.	FAP No. STP-8888(480)	78	173

PROPOSED DRAINAGE STRUCTURE SCHEDULE

SR. NO.	STRUCTURE NUMBER	DESCRIPTION	BASELINE	STATION	OFFSET	INVERT ELEVATION	TOP ELEVATION	DC WATER DETAILS
1	CB-22	DOUBLE CB	KENNEDY ST	46+45.36	15.00' LT.	195.99	200.82	S-30.03
2	CB-23	DOUBLE CB	KENNEDY ST	46+46.62	15.00' RT.	195.65	201.53	MODIFIED S-30.03*
3	CB-24	TRIPLE CB	KANSAS AVE	609+45.26	25.00' LT.	202.84	209.99	MODIFIED S-30.03*
4	CB-25	DOUBLE CB	KENNEDY ST	49+67.85	12.65' RT.	201.17	209.00	MODIFIED S-30.03*
5	CB-26	DOUBLE CB	MISSOURI AVE	509+55.36	21.29' LT.	203.19	208.02	S-30.03
6	MH-4	MANHOLE	KENNEDY ST	46+25.10	4.46' RT.	195.46/195.36	200.39	S-20.01
7	MH-5	MANHOLE	MISSOURI AVE	507+79.14	9.41' RT.	193.96	203.98	S-20.01

* SEE DWG. DD-14 FOR THE DETAILS OF THE MODIFIED CATCH BASIN

STORMDRAIN PIPE SCHEDULE

PIPE NO.	STRUCTURE NUMBER FROM	STRUCTURE NUMBER TO	INVERT IN	INVERT OUT	SIZE	TYPE	LENGTH
1	CB-22	MH-4	195.99	195.46	15" RCP	CLASS IV	22.2'
2	CB-23	MH-4	195.65	195.46	15" RCP	CLASS IV	18.7'
3	MH-4	EX-MH	195.36	194.70	15" RCP	CLASS IV	27.6'
4	CB-24	EX-MH	202.84	202.73	15" RCP	CLASS IV	9.9'
5	CB-25	EX-MH	201.17	200.79	15" RCP	CLASS IV	37.8'

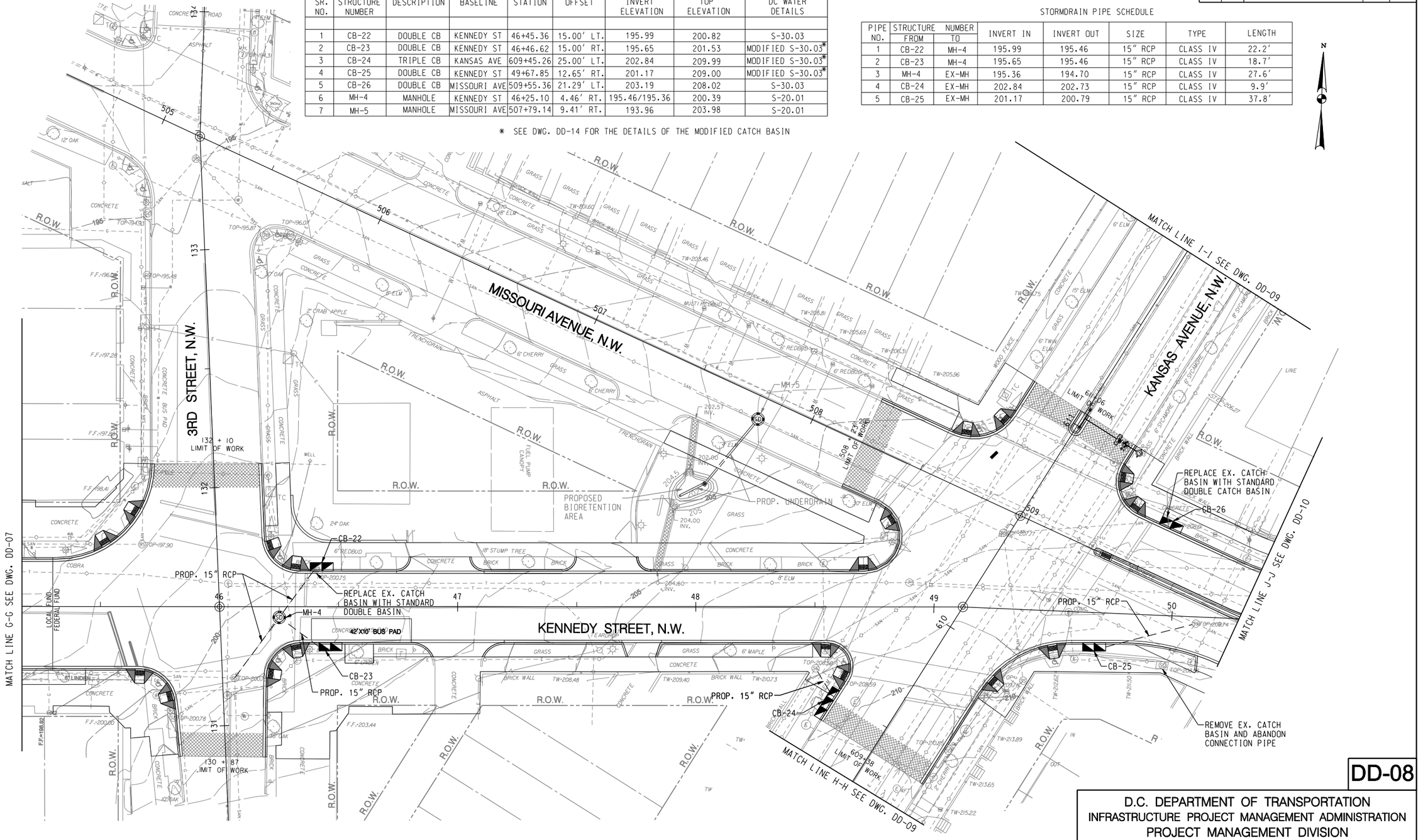

DD-08

D.C. DEPARTMENT OF TRANSPORTATION
INFRASTRUCTURE PROJECT MANAGEMENT ADMINISTRATION
PROJECT MANAGEMENT DIVISION

KENNEDY STREET, N.W. IMPROVEMENT
FROM GEORGIA AVENUE TO NORTH CAPITOL STREET

DRAINAGE PLAN

PROJECT ENG. ____
DESIGNED BY SZ
CHECKED BY SS
DRAWN BY BH
PROJECT MGR. TS

DIVISION CHIEF
DATE ____
FILE ____
SHEET 78 OF 173

SHELADIA ASSOCIATES, INC.
Engineers, Architects
Development Consultants
15825 Shady Grove Road, Rockville, MD. 20850
Phone: 301-590-3939 Fax:301-948-7174
www.sheladia.com

PSI
Precision Systems, Inc.
Engineers, Planners and Architects
WASHINGTON, D.C.

NO.	DESCRIPTION	NAME	DATE

REVISIONS

$PENTBL$
Tuesday, July 28, 2015 AT 05:31 PM
$PLTDRVL$
$FILEL$
$SHEETSIZE$$SCALESHORT$

REG	STATE	PROJECT	SHEET NO.	TOTAL SHEETS
3	D.C.	FAP No. STP-8888(480)	79	173

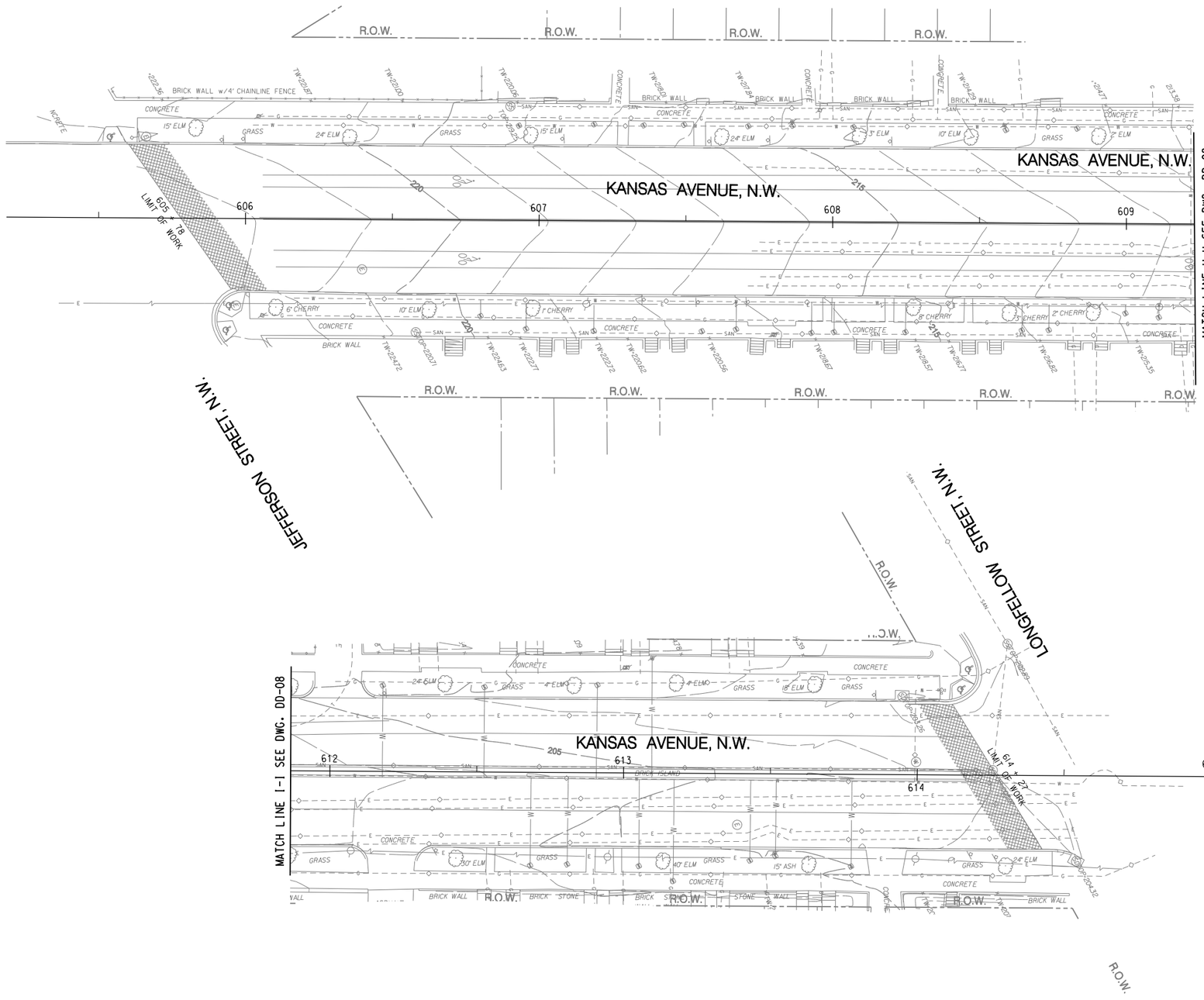

GRAPHIC SCALE
20 10 0 20 40
1" = 20'-0" HORIZ.

SHELADIA ASSOCIATES, INC.
Engineers, Architects
Development Consultants
15825 Shady Grove Road, Rockville, MD. 20850
Phone: 301-590-3939 Fax:301-948-7174
www.sheladia.com

PSI
Precision Systems, Inc.
Engineers, Planners and Architects
WASHINGTON, D.C.

NO.	DESCRIPTION	NAME	DATE

REVISIONS

DD-09

D.C. DEPARTMENT OF TRANSPORTATION
INFRASTRUCTURE PROJECT MANAGEMENT ADMINISTRATION
PROJECT MANAGEMENT DIVISION

KENNEDY STREET, N.W. IMPROVEMENT
FROM GEORGIA AVENUE TO NORTH CAPITOL STREET

PROJECT ENG. ____
DESIGNED BY SZ
CHECKED BY SS
DRAWN BY BH
PROJECT MGR. TS

DRAINAGE PLAN

DIVISION CHIEF
DATE ____
FILE ____
SHEET 79 OF 173

$PENTBL$
Tuesday, July 28, 2015 AT 05:31 PM
$PLTDRVL$
$FILEL$
$SHEETSIZE$$SCALESHORT$

REG	STATE	PROJECT	SHEET NO.	TOTAL SHEETS
3	D.C.	FAP No. STP-8888(480)	80	173

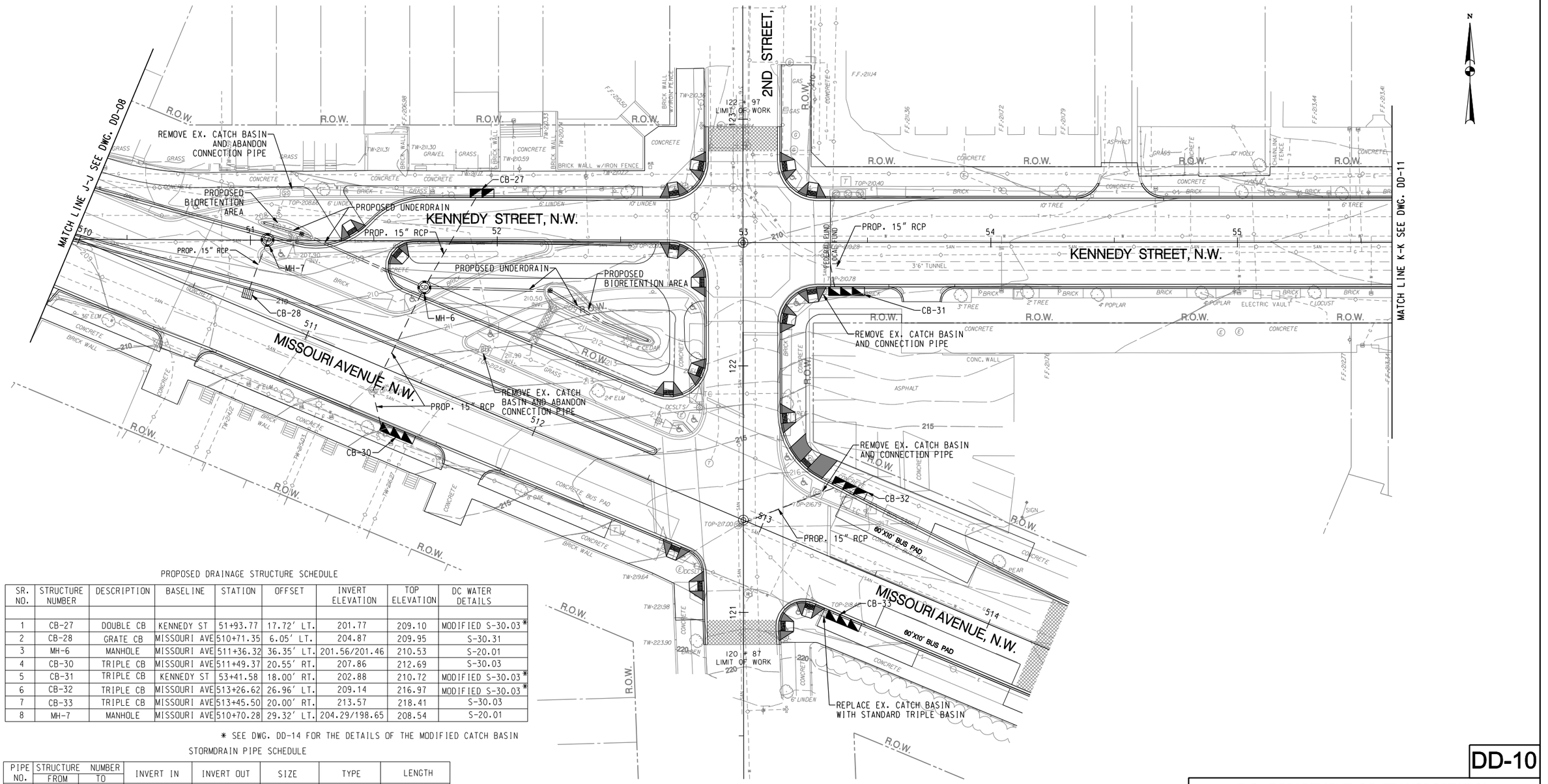

PROPOSED DRAINAGE STRUCTURE SCHEDULE

SR. NO.	STRUCTURE NUMBER	DESCRIPTION	BASELINE	STATION	OFFSET	INVERT ELEVATION	TOP ELEVATION	DC WATER DETAILS
1	CB-27	DOUBLE CB	KENNEDY ST	51+93.77	17.72' LT.	201.77	209.10	MODIFIED S-30.03*
2	CB-28	GRATE CB	MISSOURI AVE	510+71.35	6.05' LT.	204.87	209.95	S-30.31
3	MH-6	MANHOLE	MISSOURI AVE	511+36.32	36.35' LT.	201.56/201.46	210.53	S-20.01
4	CB-30	TRIPLE CB	MISSOURI AVE	511+49.37	20.55' RT.	207.86	212.69	S-30.03
5	CB-31	TRIPLE CB	KENNEDY ST	53+41.58	18.00' RT.	202.88	210.72	MODIFIED S-30.03*
6	CB-32	TRIPLE CB	MISSOURI AVE	513+26.62	26.96' LT.	209.14	216.97	MODIFIED S-30.03*
7	CB-33	TRIPLE CB	MISSOURI AVE	513+45.50	20.00' RT.	213.57	218.41	S-30.03
8	MH-7	MANHOLE	MISSOURI AVE	510+70.28	29.32' LT.	204.29/198.65	208.54	S-20.01

* SEE DWG. DD-14 FOR THE DETAILS OF THE MODIFIED CATCH BASIN

STORMDRAIN PIPE SCHEDULE

PIPE NO.	STRUCTURE NUMBER FROM	STRUCTURE NUMBER TO	INVERT IN	INVERT OUT	SIZE	TYPE	LENGTH
1	CB-27	MH-6	201.77	201.56	15" RCP	CLASS IV	40.7'
2	MH-6	EX-MH	201.46	201.25	15" RCP	CLASS IV	42.9'
3	CB-28	MH-7	204.87	204.29	15" RCP	CLASS IV	20.0'
4	CB-30	EX-MH	207.86	207.73	15" RCP	CLASS IV	13.4'
5	CB-31	EX-MH	202.88	202.71	15" RCP	CLASS IV	15.2'
6	CB-32	EX-MH	209.14	208.70	15" RCP	CLASS IV	41.7'

GRAPHIC SCALE
20 10 0 20 40
1" = 20'-0" HORIZ.

DD-10

D.C. DEPARTMENT OF TRANSPORTATION
INFRASTRUCTURE PROJECT MANAGEMENT ADMINISTRATION
PROJECT MANAGEMENT DIVISION

KENNEDY STREET, N.W. IMPROVEMENT
FROM GEORGIA AVENUE TO NORTH CAPITOL STREET

PROJECT ENG. ____
DESIGNED BY SZ
CHECKED BY SS
DRAWN BY BH
PROJECT MGR. TS

DRAINAGE PLAN

DIVISION CHIEF
DATE ____
FILE ____
SHEET 80 OF 173

SHELADIA ASSOCIATES, INC.
Engineers, Architects
Development Consultants
15825 Shady Grove Road, Rockville, MD. 20850
Phone: 301-590-3939 Fax:301-948-7174
www.sheladia.com

PSI
Precision Systems, Inc.
Engineers, Planners and Architects
WASHINGTON, D.C.

NO.	DESCRIPTION	NAME	DATE

REVISIONS

$PLTDRVL$
$PENTBLL$
Tuesday, July 28, 2015 AT 05:32 PM
$FILEL$
$SHEETSIZE$$SCALESHORT$

REG	STATE	PROJECT	SHEET NO.	TOTAL SHEETS
3	D.C.	FAP No. STP-8888(480)	81	173

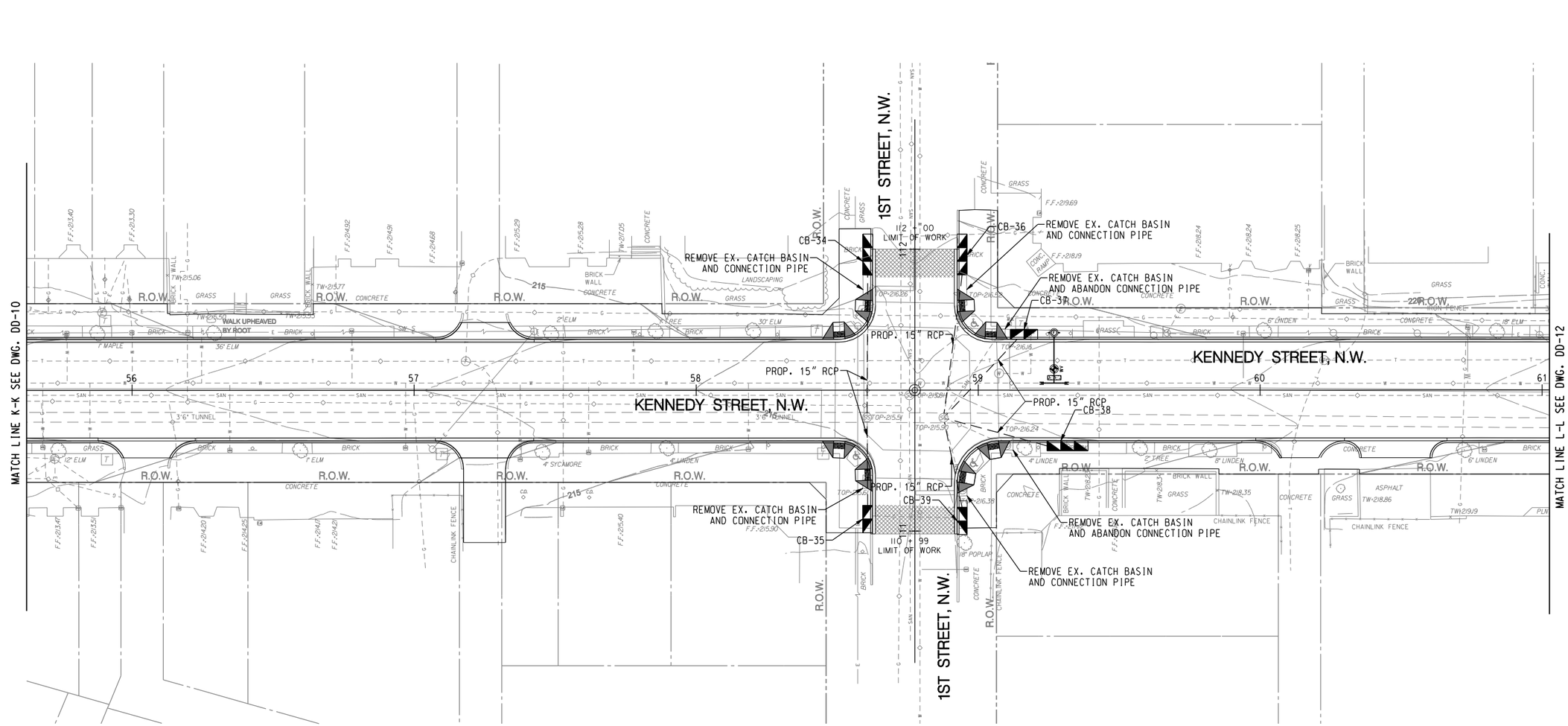

PROPOSED DRAINAGE STRUCTURE SCHEDULE

SR. NO.	STRUCTURE NUMBER	DESCRIPTION	BASELINE	STATION	OFFSET	INVERT ELEVATION	TOP ELEVATION	DC WATER DETAILS
								S-30.03
1	CB-34	TRIPLE CB	1ST STREET	111+98.05	15.00' LT.	209.20	217.03	MODIFIED S-30.03*
2	CB-35	DOUBLE CB	1ST STREET	111+04.28	15.00' LT.	210.90	215.74	S-30.03
3	CB-36	TRIPLE CB	1ST STREET	111+98.06	15.00' RT.	210.50	217.34	MODIFIED S-30.03*
4	CB-37	DOUBLE CB	KENNEDY ST	59+16.30	18.00' LT.	208.39	216.23	MODIFIED S-30.03*
5	CB-38	TRIPLE CB	KENNEDY ST	59+31.73	18.00' RT.	208.57	216.41	MODIFIED S-30.03*
6	CB-39	DOUBLE CB	1ST STREET	111+03.57	46.43' RT.	211.60	216.44	S-30.03

* SEE DWG. DD-14 FOR THE DETAILS OF THE MODIFIED CATCH BASIN

STORMDRAIN PIPE SCHEDULE

PIPE NO.	STRUCTURE NUMBER FROM	STRUCTURE NUMBER TO	INVERT IN	INVERT OUT	SIZE	TYPE	LENGTH
1	CB-34	EX-MH	209.20	205.26	15" RCP	CLASS IV	49.1'
2	CB-35	EX-MH	210.90	210.54	15" RCP	CLASS IV	29.9'
3	CB-36	EX-MH	210.50	205.89	15" RCP	CLASS IV	49.8'
4	CB-37	EX-MH	208.39	208.02	15" RCP	CLASS IV	36.9'
5	CB-38	EX-MH	208.57	208.20	15" RCP	CLASS IV	36.7'
6	CB-39	EX-MH	211.60	211.43	15" RCP	CLASS IV	31.1'

GRAPHIC SCALE
20 10 0 20 40
1" = 20'-0" HORIZ.

SHELADIA ASSOCIATES, INC
Engineers, Architects Development Consultants
15825 Shady Grove Road, Rockville, MD. 20850
Phone: 301-590-3939 Fax:301-948-7174
www.sheladia.com

PSI
Precision Systems, Inc.
Engineers, Planners and Architects
WASHINGTON, D.C.

NO	DESCRIPTION	NAME	DATE
	REVISIONS		

DD-11

D.C. DEPARTMENT OF TRANSPORTATION
INFRASTRUCTURE PROJECT MANAGEMENT ADMINISTRATION
PROJECT MANAGEMENT DIVISION

KENNEDY STREET, N.W. IMPROVEMENT
FROM GEORGIA AVENUE TO NORTH CAPITOL STREET

DRAINAGE PLAN

PROJECT ENG. ____
DESIGNED BY SZ
CHECKED BY SS
DRAWN BY BH
PROJECT MGR. TS

DIVISION CHIEF
DATE ____
FILE ____
SHEET 81 OF 173

$PLTDRVL$
$PENTBL$
Tuesday, July 28, 2015 AT 05:32 PM
$FILEL$
$SHEETSIZE$$SCALESHORT$

REG	STATE	PROJECT	SHEET NO.	TOTAL SHEETS
3	D.C.	FAP No. STP-8888(480)	82	173

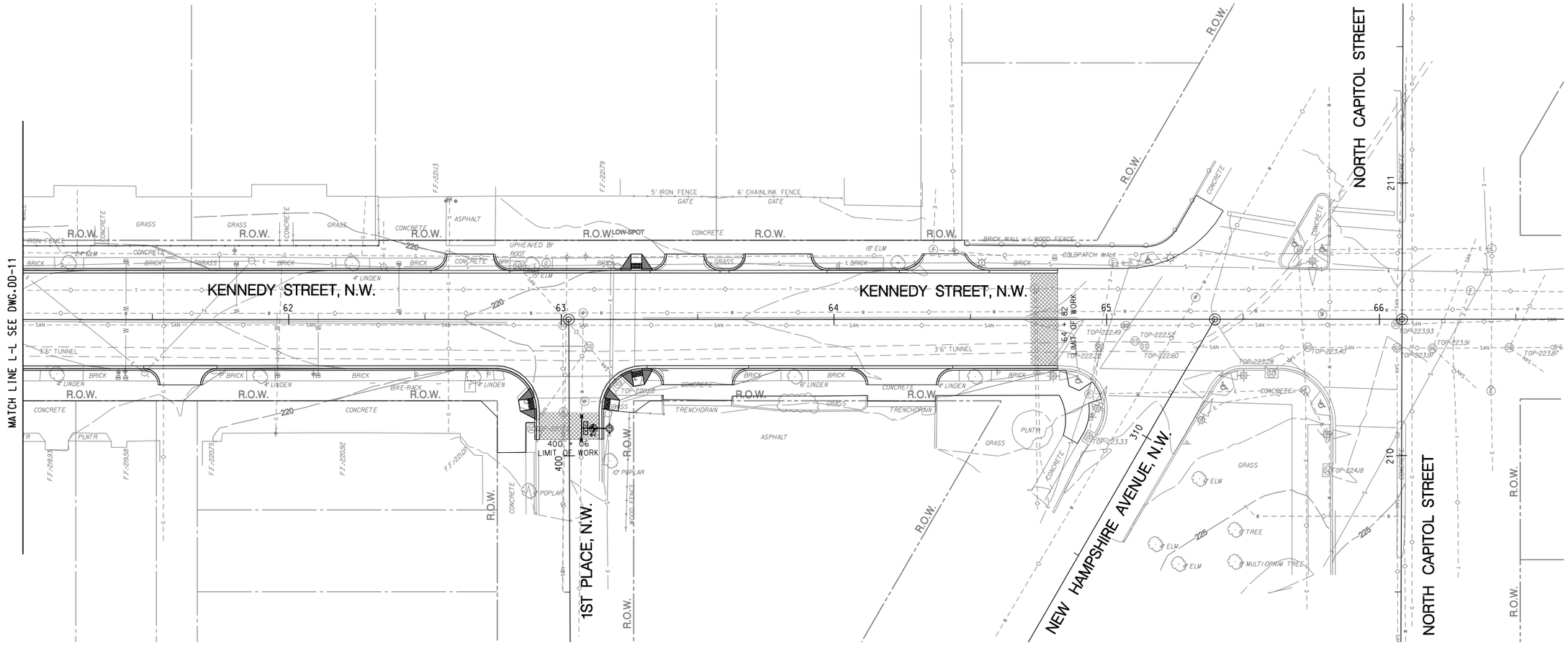

DD-12

D.C. DEPARTMENT OF TRANSPORTATION
INFRASTRUCTURE PROJECT MANAGEMENT ADMINISTRATION
PROJECT MANAGEMENT DIVISION

KENNEDY STREET, N.W. IMPROVEMENT
FROM GEORGIA AVENUE TO NORTH CAPITOL STREET

DRAINAGE PLAN

PROJECT ENG. ____
DESIGNED BY SZ
CHECKED BY SS
DRAWN BY BH
PROJECT MGR. TS

DIVISION CHIEF
DATE ____
FILE ____
SHEET 82 OF 173

SHELADIA ASSOCIATES, INC.
Engineers, Architects
Development Consultants
15825 Shady Grove Road, Rockville, MD. 20850
Phone: 301-590-3939 Fax:301-948-7174
www.sheladia.com

Precision Systems, Inc.
Engineers, Planners and Architects
WASHINGTON, D.C.

NO.	DESCRIPTION	NAME	DATE

REVISIONS

$PENTBL$
Tuesday, July 28, 2015 AT 05:34 PM
$PLTDRVL$
$FILEL$
$SHEETSIZE$$SCALESHORT$

REG	STATE	PROJECT	SHEET NO.	TOTAL SHEETS
3	D.C.	FAP No. STP-8888(480)	83	173

* DENOTES MODIFIED 10.0' OVERALL DEPTH CATCH BASIN

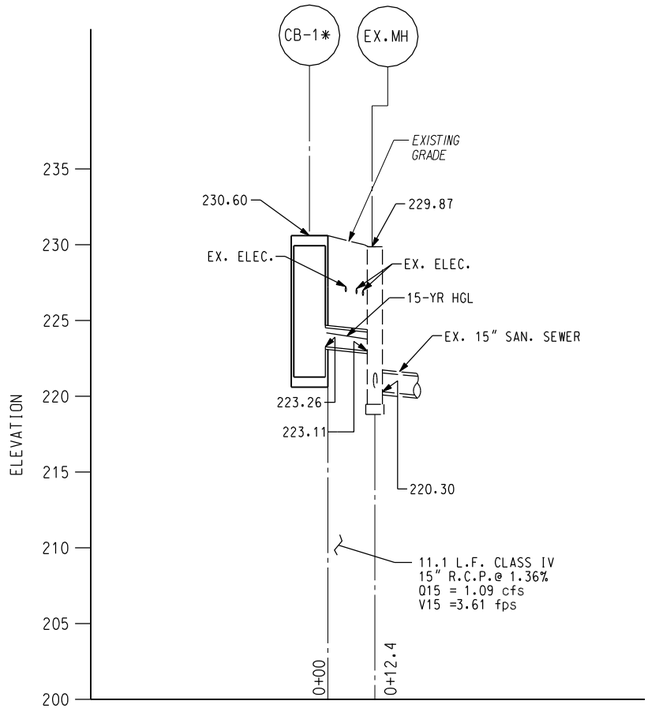

STATION 711+5.28 LEFT

PROFILE #1

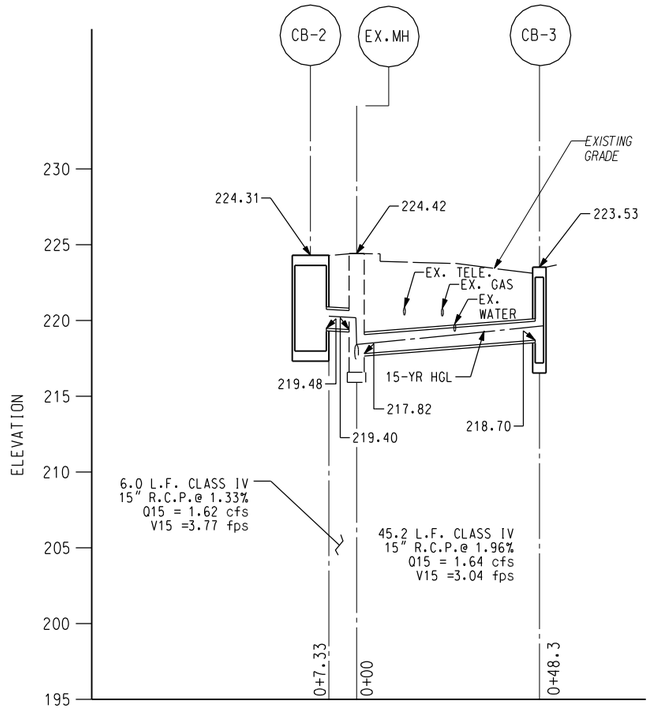

STATION 18+14.18 LEFT

PROFILE #2

* DENOTES MODIFIED 10.0' OVERALL DEPTH CATCH BASIN

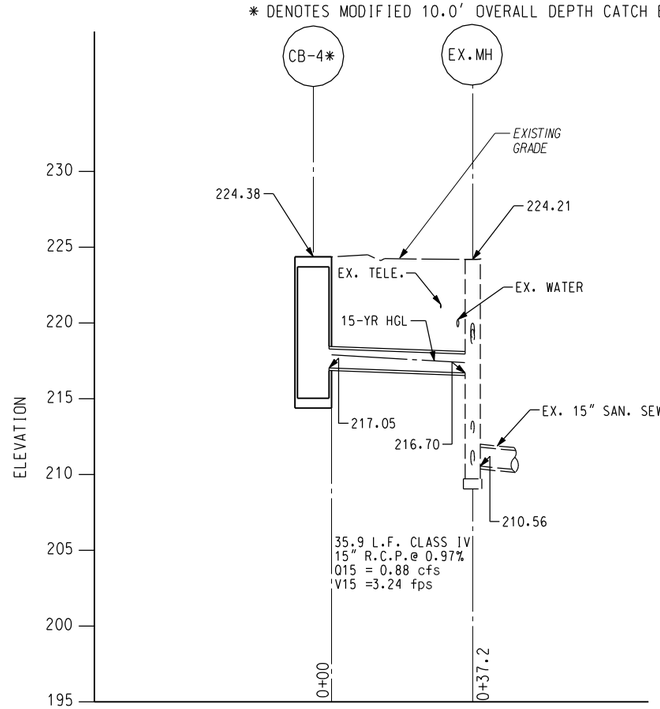

STATION 18+93.85 LEFT

PROFILE #3

NOTES:

1. FOR PLAN VIEW, STORMDRAIN STRUCTURE AND PIPE SCHEDULE SEE DRAWINGS:
   PROFILE #1 - - - - - - - DD-01
   PROFILE #2 - - - - - - - DD-02
   PROFILE #3 - - - - - - - DD-02

NOTES FOR UTILITY CROSSINGS:

1. ALL EXISTING UTILITIES CROSSING STORMDRAINS ARE PLOTTED WITH ASSUMED COVER AS FOLLOWS:

   WATER LINE: 4'
   GAS LINE: 3'
   ELECTRIC LINE: 3'
   TELE. COM. LINE: 3'

2. TEST PIT WILL BE REQUESTED FOR ALL UTILITIES THAT CROSSES THE PROPOSED STORM DRAIN PIPE.

3. ONCE THE TEST PIT DATA IS AVAILABLE, THE EXISTING UTILITY LINES WILL BE RELOCATED AND/OR ADJUSTED VERTICALLY IF UTILITY LINES ARE IN CONFLICT WITH STORMDRAIN PIPES OR CLEARANCE IS LESS THAN 1 FOOT.

4. EXISTING UNDERGROUND UTILITY WILL BE RELOCATED IF THERE IS HORIZONTAL CONFLICT WITH PROPOSED STORM DRAIN STRUCTURE.

5. FOR OTHER UTILITY NOTES SEE DRAWING NO. DD-01.

GRAPHIC SCALE

SHELADIA ASSOCIATES, INC.
Engineers, Architects Development Consultants
15825 Shady Grove Road, Rockville, MD. 20850
Phone: 301-590-3939 Fax:301-948-7174
www.sheladia.com

Precision Systems, Inc.
Engineers, Planners and Architects
WASHINGTON, D.C.

NO	DESCRIPTION	NAME	DATE

REVISIONS

DP-01

D.C. DEPARTMENT OF TRANSPORTATION
INFRASTRUCTURE PROJECT MANAGEMENT ADMINISTRATION
PROJECT MANAGEMENT DIVISION

KENNEDY STREET, N.W. IMPROVEMENT
FROM GEORGIA AVENUE TO NORTH CAPITOL STREET

STORMDRAIN PROFILE

PROJECT ENG. ____
DESIGNED BY SZ
CHECKED BY SS
DRAWN BY BH
PROJECT MGR. TS

DIVISION CHIEF
DATE ____
FILE ____
SHEET 83 OF 173

$PENTBL$
Tuesday, July 28, 2015 AT 05:34 PM
$PLTDRVL$
$FILEL$
$SHEETSIZE$$SCALESHORT$

REG	STATE	PROJECT	SHEET NO.	TOTAL SHEETS
3	D.C.	FAP No. STP-8888(480)	84	173

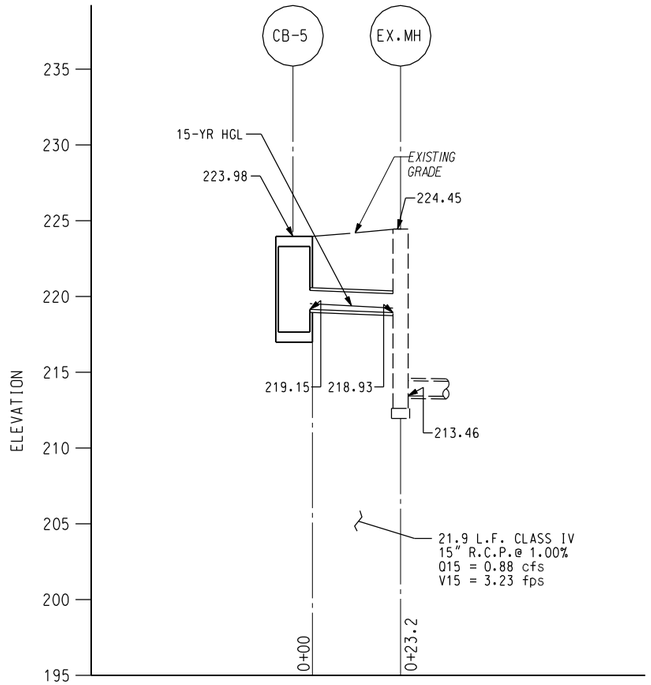

STATION 18+94.41 RIGHT

PROFILE #1

* DENOTES MODIFIED 10.0' OVERALL DEPTH CATCH BASIN

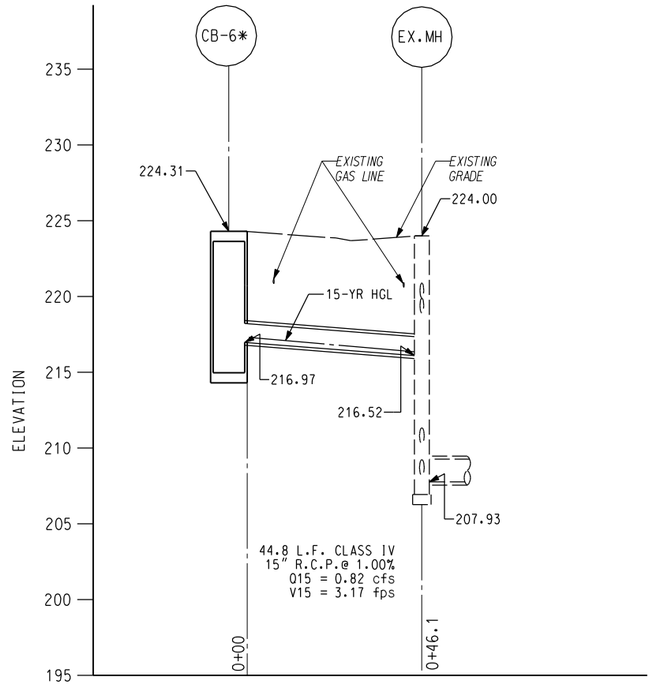

STATION 22+91.26 LEFT

PROFILE #2

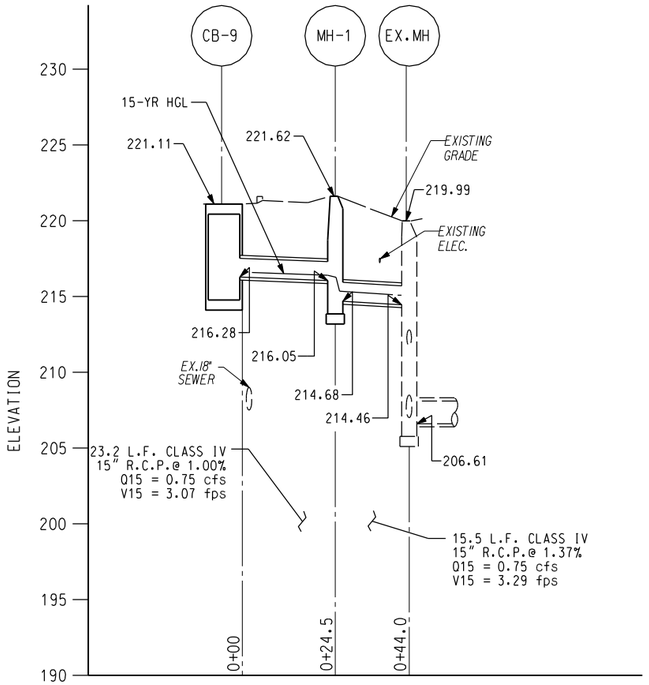

STATION 24+51.12 LEFT

PROFILE #3

NOTES:

1. FOR PLAN VIEW, STORMDRAIN STRUCTURE AND PIPE SCHEDULE SEE DRAWINGS:

   PROFILE #1 - - - - - - - DD-02
   PROFILE #2 - - - - - - - DD-03
   PROFILE #3 - - - - - - - DD-03

NOTES FOR UTILITY CROSSINGS:

1. ALL EXISTING UTILITIES CROSSING STORMDRAINS ARE PLOTTED WITH ASSUMED COVER AS FOLLOWS:

   WATER LINE: 4'
   GAS LINE: 3'
   ELECTRIC LINE: 3'
   TELE. COM. LINE: 3'

2. TEST PIT WILL BE REQUESTED FOR ALL UTILITIES THAT CROSSES THE PROPOSED STORM DRAIN PIPE.

3. ONCE THE TEST PIT DATA IS AVAILABLE, THE EXISTING UTILITY LINES WILL BE RELOCATED AND/OR ADJUSTED VERTICALLY IF UTILITY LINES ARE IN CONFLICT WITH STORMDRAIN PIPES OR CLEARANCE IS LESS THAN 1 FOOT.

4. EXISTING UNDERGROUND UTILITY WILL BE RELOCATED IF THERE IS HORIZONTAL CONFLICT WITH PROPOSED STORM DRAIN STRUCTURE.

5. FOR OTHER UTILITY NOTES SEE DRAWING NO. DD-01.

GRAPHIC SCALE

SHELADIA ASSOCIATES, INC.
Engineers, Architects Development Consultants
15825 Shady Grove Road, Rockville, MD. 20850
Phone: 301-590-3939 Fax:301-948-7174
www.sheladia.com

PSI
Precision Systems, Inc.
Engineers, Planners and Architects
WASHINGTON, D.C.

NO.	DESCRIPTION	NAME	DATE

REVISIONS

DP-02

D.C. DEPARTMENT OF TRANSPORTATION
INFRASTRUCTURE PROJECT MANAGEMENT ADMINISTRATION
PROJECT MANAGEMENT DIVISION

KENNEDY STREET, N.W. IMPROVEMENT
FROM GEORGIA AVENUE TO NORTH CAPITOL STREET

PROJECT ENG. ____
DESIGNED BY SZ
CHECKED BY SS
DRAWN BY BH
PROJECT MGR. TS

STORMDRAIN PROFILE

DIVISION CHIEF

DATE ____
FILE ____
SHEET 84 OF 173

$PENTBL$
Tuesday, July 28, 2015 AT 05:34 PM
$PLTORVL$
$FILEL$
$SHEETSIZE$$SCALESHORT$

REG	STATE	PROJECT	SHEET NO.	TOTAL SHEETS
3	D.C.	FAP No. STP-8888(480)	85	173

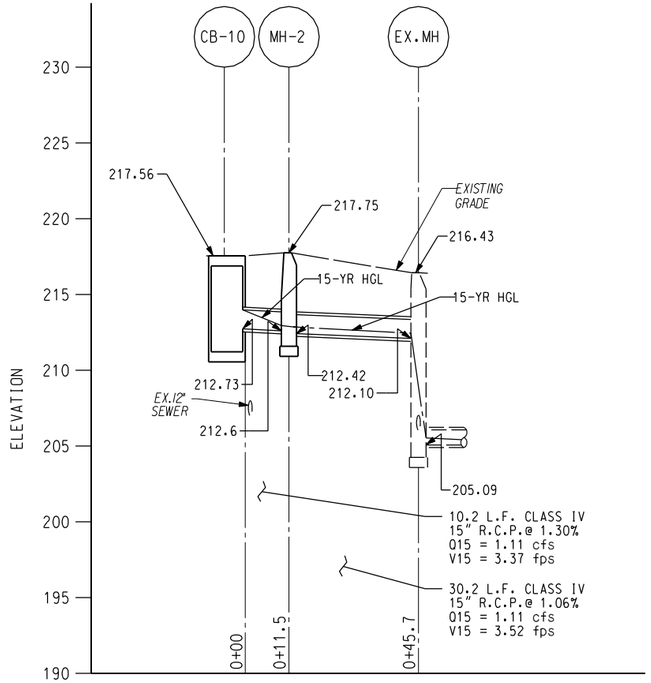

STATION 25+68.85 RIGHT

PROFILE #1

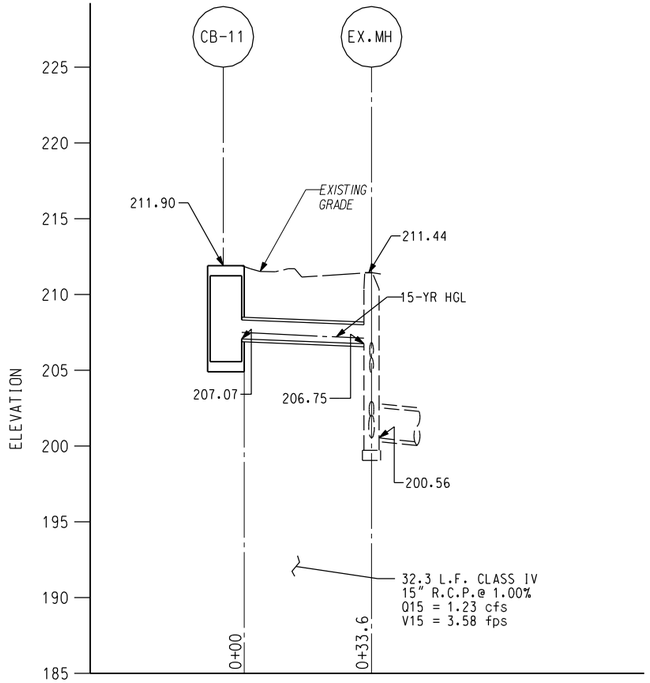

STATION 27+94.10 LEFT

PROFILE #2

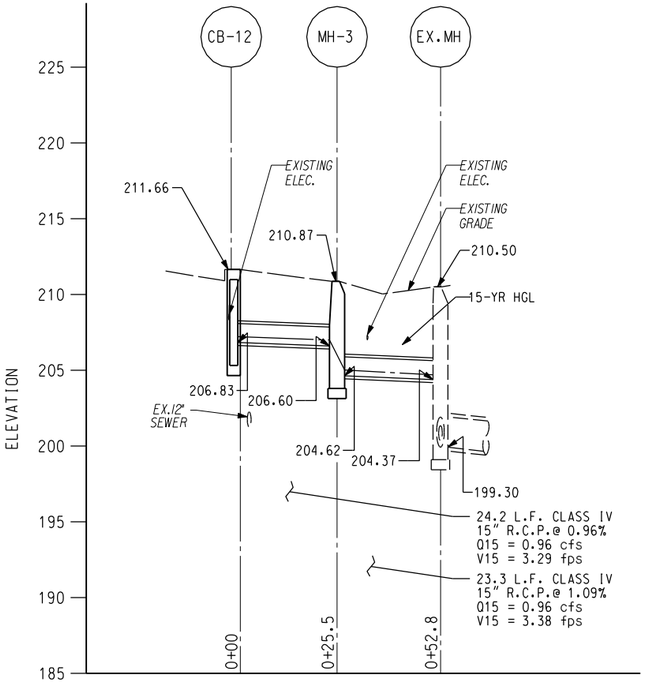

STATION 27+85.57 RIGHT

PROFILE #3

NOTES:

1. FOR PLAN VIEW, STORMDRAIN STRUCTURE AND PIPE SCHEDULE SEE DRAWINGS:
   PROFILE #1 - - - - - - - DD-04
   PROFILE #2 - - - - - - - DD-04
   PROFILE #3 - - - - - - - DD-04

GRAPHIC SCALE

20 15 10 5 0 10 20 30 40

1" = 20'-0" HORIZ.

5 0 5 10

1" = 5'-0" VERT.

NOTES FOR UTILITY CROSSINGS:

1. ALL EXISTING UTILITIES CROSSING STORMDRAINS ARE PLOTTED WITH ASSUMED COVER AS FOLLOWS:

   WATER LINE: 4'
   GAS LINE: 3'
   ELECTRIC LINE: 3'
   TELE. COM. LINE: 3'

2. TEST PIT WILL BE REQUESTED FOR ALL UTILITIES THAT CROSSES THE PROPOSED STORM DRAIN PIPE.

3. ONCE THE TEST PIT DATA IS AVAILABLE, THE EXISTING UTILITY LINES WILL BE RELOCATED AND/OR ADJUSTED VERTICALLY IF UTILITY LINES ARE IN CONFLICT WITH STORMDRAIN PIPES OR CLEARANCE IS LESS THAN 1 FOOT.

4. EXISTING UNDERGROUND UTILITY WILL BE RELOCATED IF THERE IS HORIZONTAL CONFLICT WITH PROPOSED STORM DRAIN STRUCTURE.

5. FOR OTHER UTILITY NOTES SEE DRAWING NO. DD-01.

SHELADIA ASSOCIATES, INC.
Engineers, Architects Development Consultants
15825 Shady Grove Road, Rockville, MD. 20850
Phone: 301-590-3939 Fax:301-948-7174
www.sheladia.com

PSI
Precision Systems, Inc.
Engineers, Planners and Architects
WASHINGTON, D.C.

NO.	DESCRIPTION	NAME	DATE

REVISIONS

DP-03

D.C. DEPARTMENT OF TRANSPORTATION
INFRASTRUCTURE PROJECT MANAGEMENT ADMINISTRATION
PROJECT MANAGEMENT DIVISION

KENNEDY STREET, N.W. IMPROVEMENT
FROM GEORGIA AVENUE TO NORTH CAPITOL STREET

PROJECT ENG. ____
DESIGNED BY SZ
CHECKED BY SS
DRAWN BY BH
PROJECT MGR. TS

DIVISION CHIEF

DATE ____
FILE ____
SHEET 85 OF 173

STORMDRAIN PROFILE

$PLTDRVL$
$PENTBL$
Tuesday, July 28, 2015 AT 05:35 PM
$FILEL$
$SHEETSIZE$$SCALESHORT$

REG	STATE	PROJECT	SHEET NO.	TOTAL SHEETS
3	D.C.	FAP No. STP-8888(480)	86	173

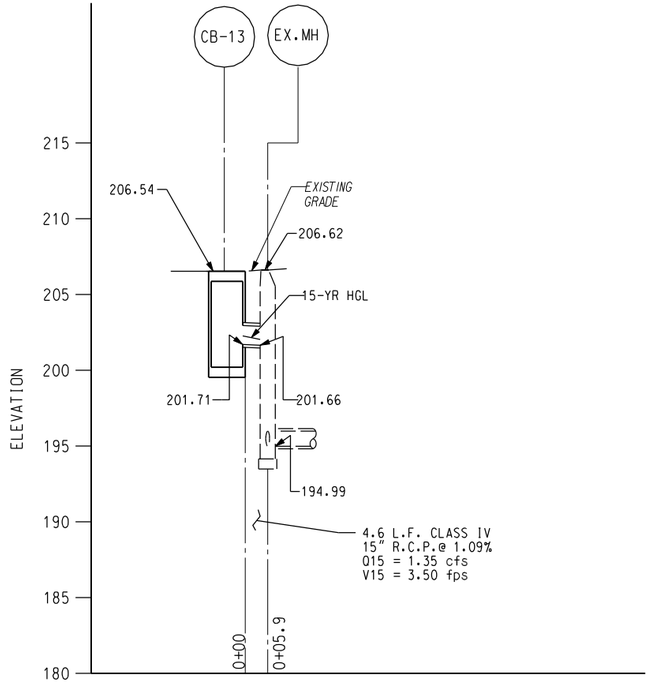

STATION 31+95.88 RIGHT

PROFILE #1

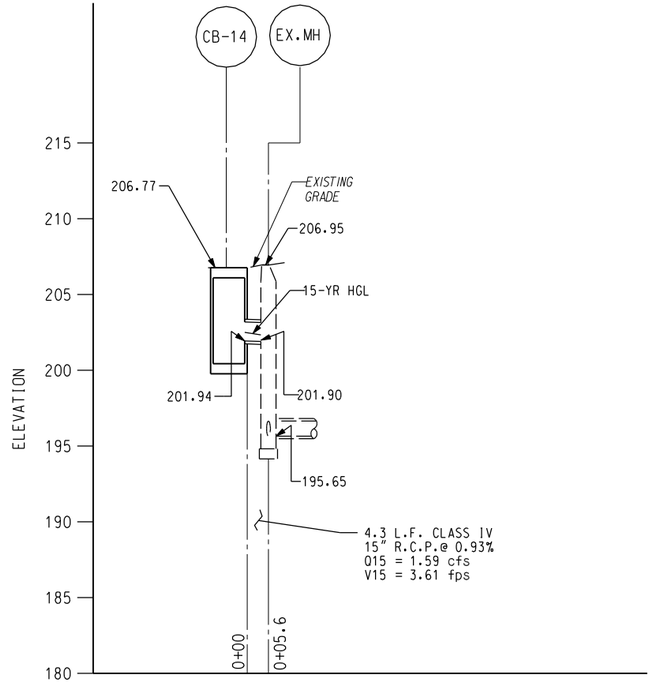

STATION 32+36.35 LEFT

PROFILE #2

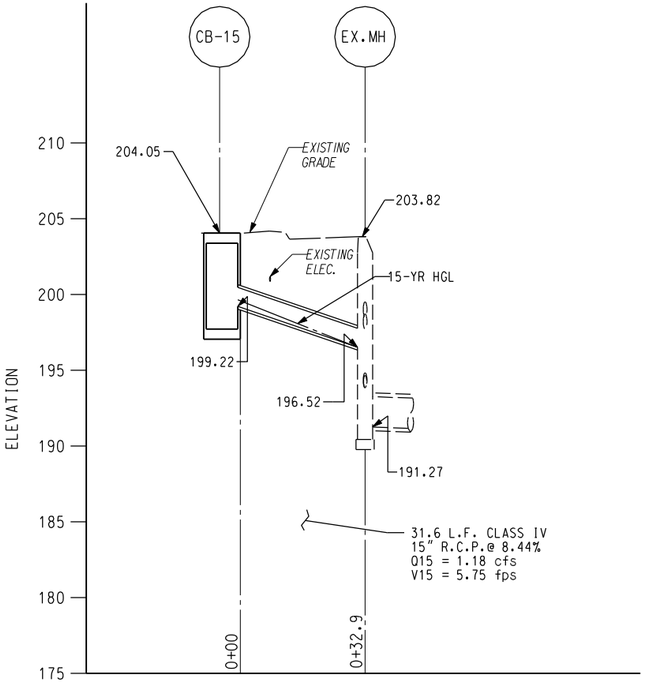

STATION 34+85.96 LEFT

PROFILE #3

NOTES:

1. FOR PLAN VIEW, STORMDRAIN STRUCTURE AND PIPE SCHEDULE SEE DRAWINGS:
   PROFILE #1 - - - - - - - DD-05
   PROFILE #2 - - - - - - - DD-05
   PROFILE #3 - - - - - - - DD-06

NOTES FOR UTILITY CROSSINGS:

1. ALL EXISTING UTILITIES CROSSING STORMDRAINS ARE PLOTTED WITH ASSUMED COVER AS FOLLOWS:

   WATER LINE: 4'
   GAS LINE: 3'
   ELECTRIC LINE: 3'
   TELE. COM. LINE: 3'

2. TEST PIT WILL BE REQUESTED FOR ALL UTILITIES THAT CROSSES THE PROPOSED STORM DRAIN PIPE.

3. ONCE THE TEST PIT DATA IS AVAILABLE, THE EXISTING UTILITY LINES WILL BE RELOCATED AND/OR ADJUSTED VERTICALLY IF UTILITY LINES ARE IN CONFLICT WITH STORMDRAIN PIPES OR CLEARANCE IS LESS THAN 1 FOOT.

4. EXISTING UNDERGROUND UTILITY WILL BE RELOCATED IF THERE IS HORIZONTAL CONFLICT WITH PROPOSED STORM DRAIN STRUCTURE.

5. FOR OTHER UTILITY NOTES SEE DRAWING NO. DD-01.

GRAPHIC SCALE

1" = 20'-0" HORIZ.

1" = 5'-0" VERT.

SHELADIA ASSOCIATES, INC.
Engineers, Architects Development Consultants
15825 Shady Grove Road, Rockville, MD. 20850
Phone: 301-590-3939 Fax:301-948-7174
www.sheladia.com

PSI
Precision Systems, Inc.
Engineers, Planners and Architects
WASHINGTON, D.C.

NO	DESCRIPTION	NAME	DATE

REVISIONS

DP-04

D.C. DEPARTMENT OF TRANSPORTATION
INFRASTRUCTURE PROJECT MANAGEMENT ADMINISTRATION
PROJECT MANAGEMENT DIVISION

KENNEDY STREET, N.W. IMPROVEMENT
FROM GEORGIA AVENUE TO NORTH CAPITOL STREET

PROJECT ENG. ____
DESIGNED BY SZ
CHECKED BY SS
DRAWN BY BH
PROJECT MGR. TS

STORMDRAIN PROFILE

DIVISION CHIEF
DATE ____
FILE ____
SHEET 86 OF 173

$PLTDRVL$
$PENTBL$
Tuesday, July 28, 2015 AT 05:35 PM
$FILEL$
$SHEETSIZE$$SCALESHORT$

REG	STATE	PROJECT	SHEET NO.	TOTAL SHEETS
3	D.C.	FAP No. STP-8888(480)	87	173

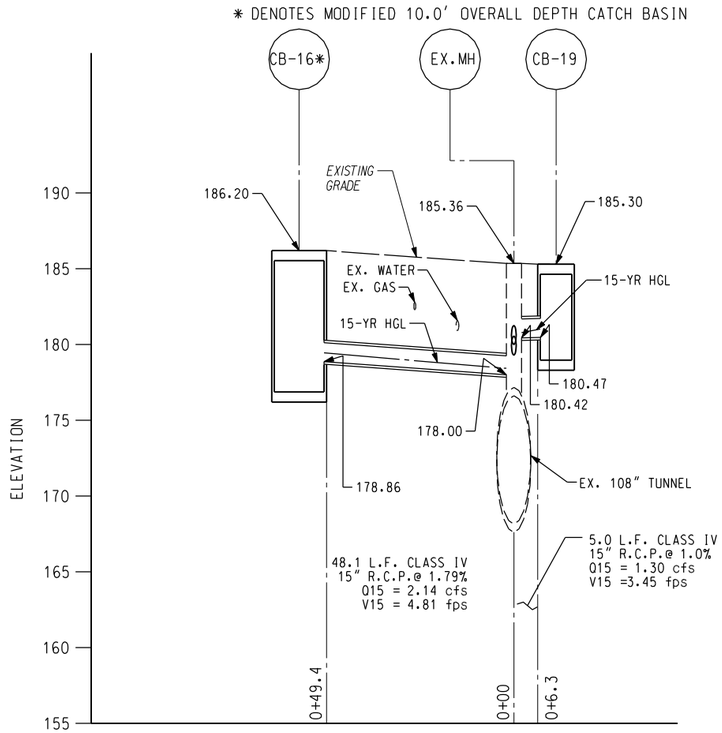

PROFILE #1

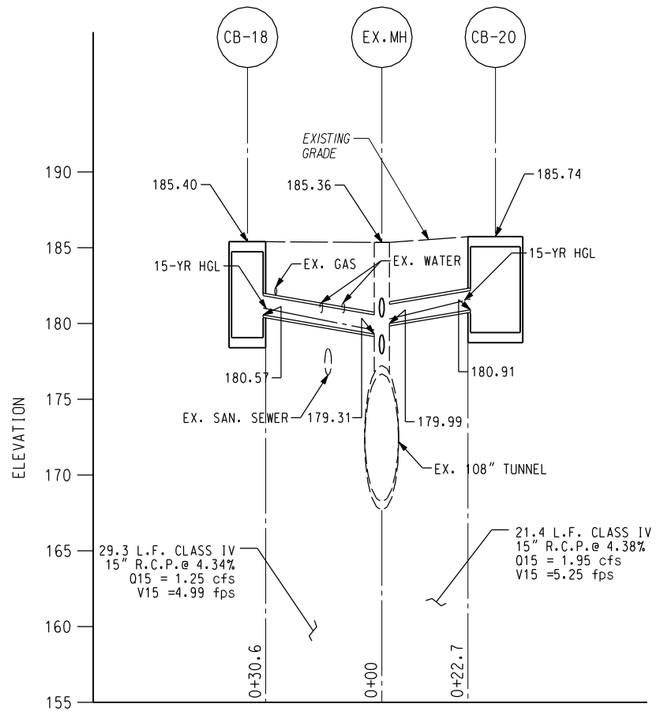

PROFILE #2

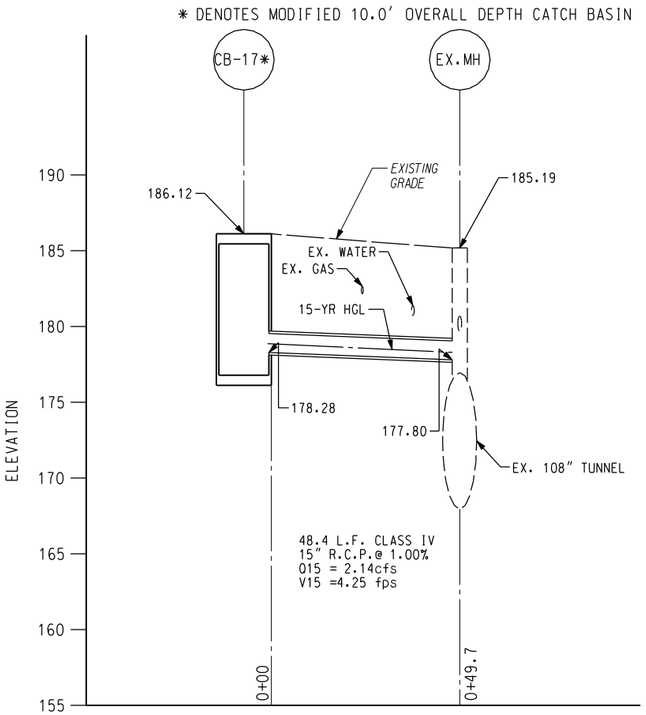

PROFILE #3

NOTES:

1. FOR PLAN VIEW, STORMDRAIN STRUCTURE AND PIPE SCHEDULE SEE DRAWINGS:
   PROFILE #1 - - - - - - - DD-07
   PROFILE #2 - - - - - - - DD-07
   PROFILE #3 - - - - - - - DD-07

NOTES FOR UTILITY CROSSINGS:

1. ALL EXISTING UTILITIES CROSSING STORMDRAINS ARE PLOTTED WITH ASSUMED COVER AS FOLLOWS:

   WATER LINE: 4'
   GAS LINE: 3'
   ELECTRIC LINE: 3'
   TELE. COM. LINE: 3'

2. TEST PIT WILL BE REQUESTED FOR ALL UTILITIES THAT CROSSES THE PROPOSED STORM DRAIN PIPE.

3. ONCE THE TEST PIT DATA IS AVAILABLE, THE EXISTING UTILITY LINES WILL BE RELOCATED AND/OR ADJUSTED VERTICALLY IF UTILITY LINES ARE IN CONFLICT WITH STORMDRAIN PIPES OR CLEARANCE IS LESS THAN 1 FOOT.

4. EXISTING UNDERGROUND UTILITY WILL BE RELOCATED IF THERE IS HORIZONTAL CONFLICT WITH PROPOSED STORM DRAIN STRUCTURE.

5. FOR OTHER UTILITY NOTES SEE DRAWING NO. DD-01.

GRAPHIC SCALE

1" = 20'-0" HORIZ.

1" = 5'-0" VERT.

Engineers, Architects Development Consultants
SHELADIA ASSOCIATES, INC.
15825 Shady Grove Road, Rockville, MD. 20850
Phone: 301-590-3939 Fax:301-948-7174
www.sheladia.com

Precision Systems, Inc.
Engineers, Planners and Architects
WASHINGTON, D.C.

NO	DESCRIPTION	NAME	DATE

REVISIONS

DP-05

D.C. DEPARTMENT OF TRANSPORTATION
INFRASTRUCTURE PROJECT MANAGEMENT ADMINISTRATION
PROJECT MANAGEMENT DIVISION

KENNEDY STREET, N.W. IMPROVEMENT
FROM GEORGIA AVENUE TO NORTH CAPITOL STREET

PROJECT ENG. ____
DESIGNED BY SZ
CHECKED BY SS
DRAWN BY BH
PROJECT MGR. TS

STORMDRAIN PROFILE

DIVISION CHIEF
DATE ____
FILE ____
SHEET 87 OF 173

$PLTDRVL$
$PENTBL$
Tuesday, July 28, 2015 AT 05:35 PM
$FILEL$
$SHEETSIZE$$SCALESHORT$

REG	STATE	PROJECT	SHEET NO.	TOTAL SHEETS
3	D.C.	FAP No. STP-8888(480)	88	173

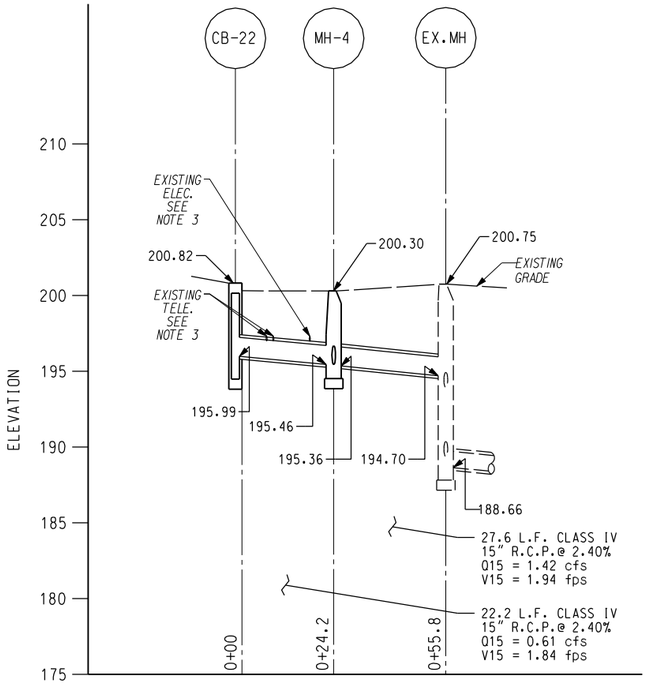

STATION 46+46.62 RIGHT

PROFILE #1

✱ DENOTES MODIFIED 10.0' OVERALL DEPTH CATCH BASIN

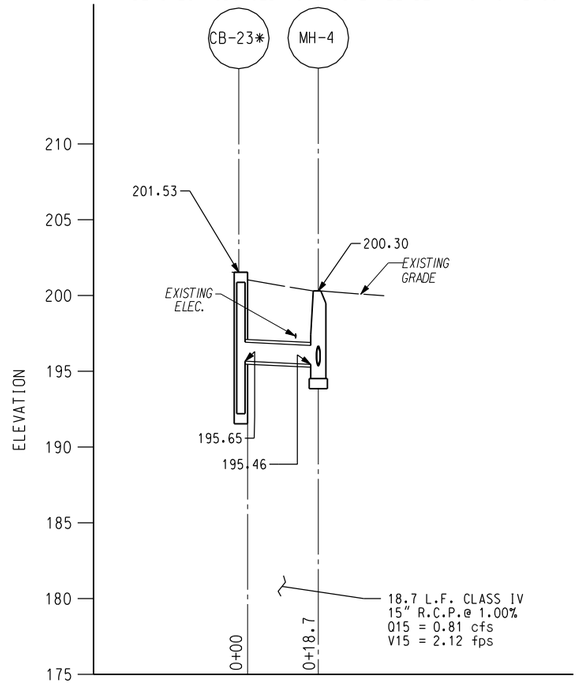

STATION 46+25.10 RIGHT

PROFILE #2

✱ DENOTES MODIFIED 10.0' OVERALL DEPTH CATCH BASIN

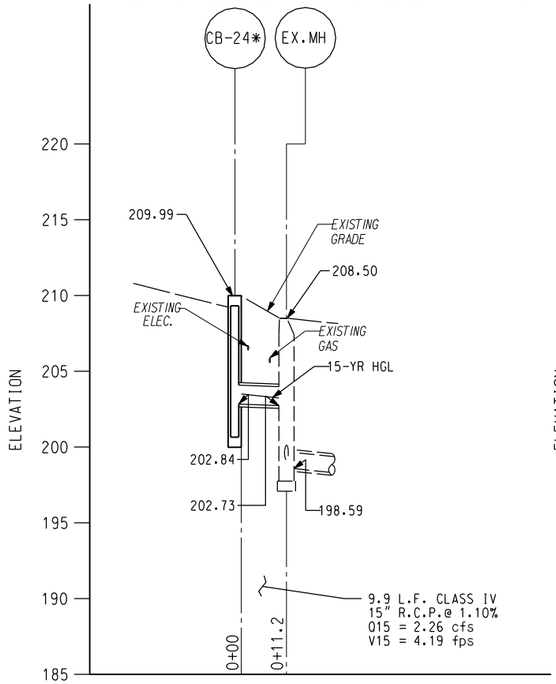

STATION 609+45.26 LEFT

PROFILE #2

✱ DENOTES MODIFIED 10.0' OVERALL DEPTH CATCH BASIN

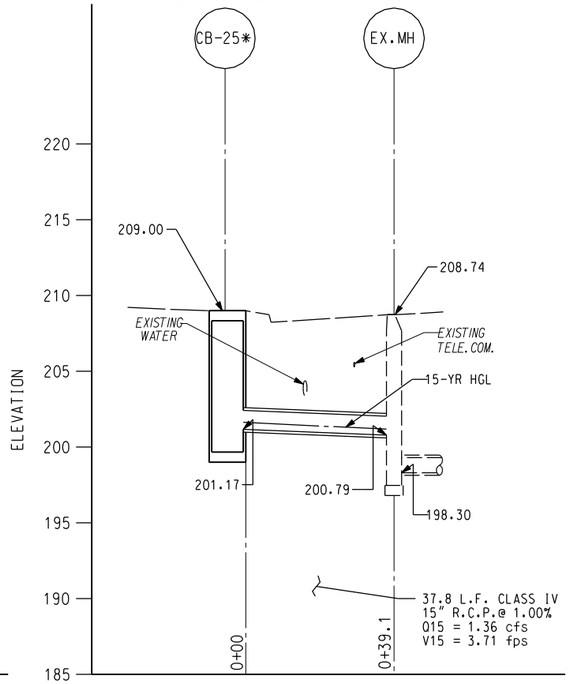

STATION 49+67.85 RIGHT

PROFILE #4

NOTES:

1. FOR PLAN VIEW, STORMDRAIN STRUCTURE AND PIPE SCHEDULE SEE DRAWINGS:

   PROFILE #1 - - - - - - - DD-08
   PROFILE #2 - - - - - - - DD-08
   PROFILE #3 - - - - - - - DD-08
   PROFILE #4 - - - - - - - DD-08

NOTES FOR UTILITY CROSSINGS:

1. ALL EXISTING UTILITIES CROSSING STORMDRAINS ARE PLOTTED WITH ASSUMED COVER AS FOLLOWS:

   WATER LINE: 4'
   GAS LINE: 3'
   ELECTRIC LINE: 3'
   TELE. COM. LINE: 3'

2. TEST PIT WILL BE REQUESTED FOR ALL UTILITIES THAT CROSSES THE PROPOSED STORM DRAIN PIPE.

3. ONCE THE TEST PIT DATA IS AVAILABLE, THE EXISTING UTILITY LINES WILL BE RELOCATED AND/OR ADJUSTED VERTICALLY IF UTILITY LINES ARE IN CONFLICT WITH STORMDRAIN PIPES OR CLEARANCE IS LESS THAN 1 FOOT.

4. EXISTING UNDERGROUND UTILITY WILL BE RELOCATED IF THERE IS HORIZONTAL CONFLICT WITH PROPOSED STORM DRAIN STRUCTURE.

5. FOR OTHER UTILITY NOTES SEE DRAWING NO. DD-01.

GRAPHIC SCALE

20 15 10 5 0 10 20 30 40

1" = 20'-0" HORIZ.

5 0 5 10

1" = 5'-0" VERT.

SHELADIA ASSOCIATES, INC.
Engineers, Architects
Development Consultants
15825 Shady Grove Road, Rockville, MD. 20850
Phone: 301-590-3939 Fax:301-948-7174
www.sheladia.com

PSI
Precision Systems, Inc.
Engineers, Planners and Architects
WASHINGTON, D.C.

NO	DESCRIPTION	NAME	DATE

REVISIONS

DP-06

D.C. DEPARTMENT OF TRANSPORTATION
INFRASTRUCTURE PROJECT MANAGEMENT ADMINISTRATION
PROJECT MANAGEMENT DIVISION

KENNEDY STREET, N.W. IMPROVEMENT
FROM GEORGIA AVENUE TO NORTH CAPITOL STREET

PROJECT ENG. ____
DESIGNED BY SZ
CHECKED BY SS
DRAWN BY BH
PROJECT MGR. TS

STORMDRAIN PROFILE

DIVISION CHIEF
DATE ____
FILE ____
SHEET 88 OF 173

$PLTDRVL$
$PENTBL$
Tuesday, July 28, 2015 AT 05:36 PM
$FILEL$
$SHEETSIZE$$SCALESHORT$

REG	STATE	PROJECT	SHEET NO.	TOTAL SHEETS
3	D.C.	FAP No. STP-8888(480)	89	173

* DENOTES MODIFIED 10.0' OVERALL DEPTH CATCH BASIN

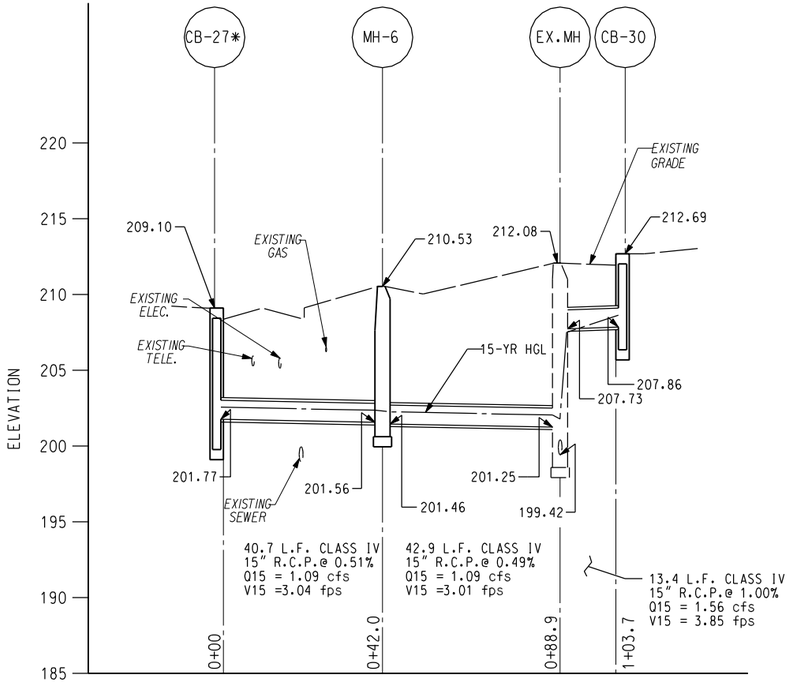

CB-27 STATION 51+93.77 LEFT
MH-6 STATION 511+36.32 LEFT
CB-30 STATION 511+49.37 RIGHT

PROFILE #1

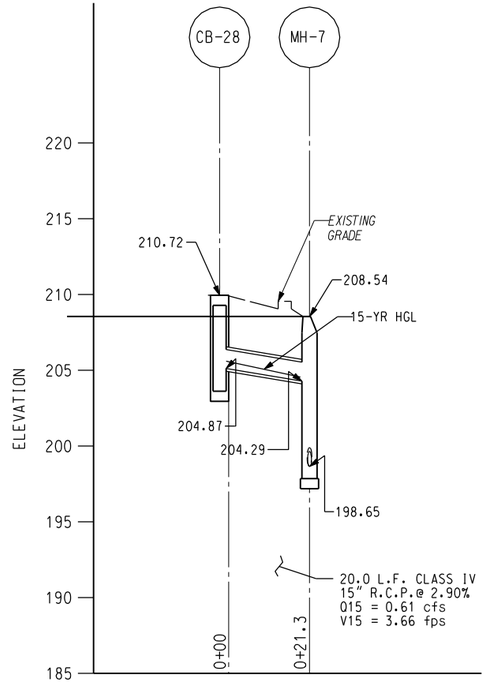

STATION 510+71.35 LEFT

PROFILE #2

* DENOTES MODIFIED 10.0' OVERALL DEPTH CATCH BASIN

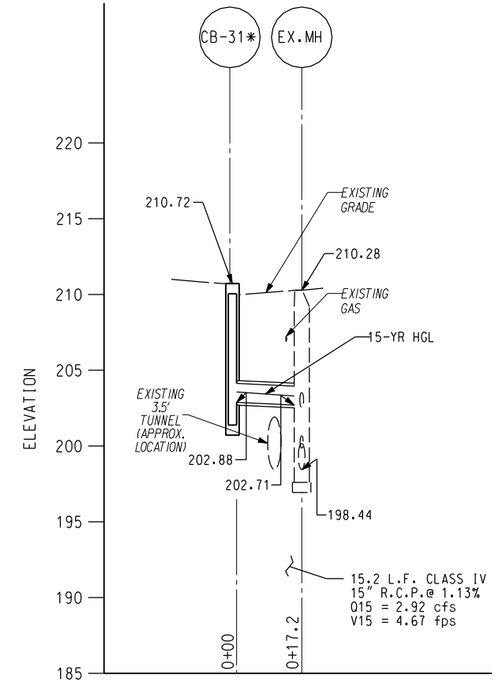

STATION 53+41.58 RIGHT

PROFILE #3

* DENOTES MODIFIED 10.0' OVERALL DEPTH CATCH BASIN

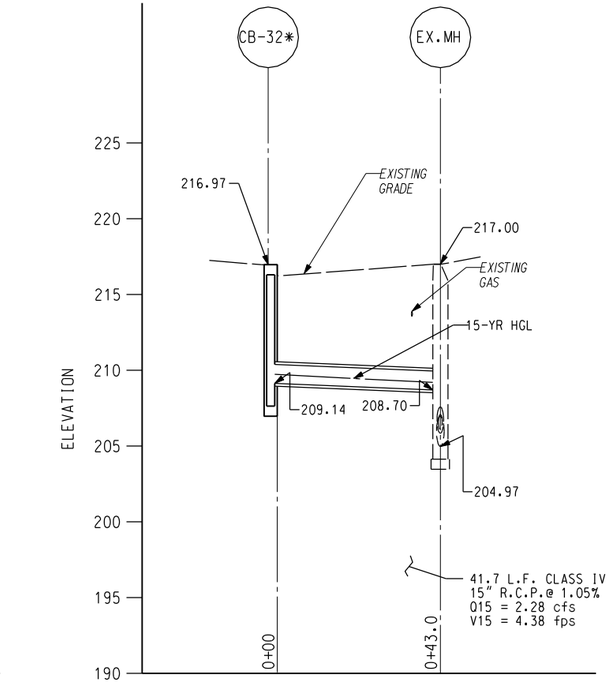

STATION 513+26.62 LEFT

PROFILE #4

NOTES:

1. FOR PLAN VIEW, STORMDRAIN STRUCTURE AND PIPE SCHEDULE SEE DRAWINGS:

   PROFILE #1 - - - - - - - DD-10
   PROFILE #2 - - - - - - - DD-10
   PROFILE #3 - - - - - - - DD-10
   PROFILE #4 - - - - - - - DD-10

NOTES FOR UTILITY CROSSINGS:

1. ALL EXISTING UTILITIES CROSSING STORMDRAINS ARE PLOTTED WITH ASSUMED COVER AS FOLLOWS:

   WATER LINE: 4'
   GAS LINE: 3'
   ELECTRIC LINE: 3'
   TELE. COM. LINE: 3'

2. TEST PIT WILL BE REQUESTED FOR ALL UTILITIES THAT CROSSES THE PROPOSED STORM DRAIN PIPE.

3. ONCE THE TEST PIT DATA IS AVAILABLE, THE EXISTING UTILITY LINES WILL BE RELOCATED AND/OR ADJUSTED VERTICALLY IF UTILITY LINES ARE IN CONFLICT WITH STORMDRAIN PIPES OR CLEARANCE IS LESS THAN 1 FOOT.

4. EXISTING UNDERGROUND UTILITY WILL BE RELOCATED IF THERE IS HORIZONTAL CONFLICT WITH PROPOSED STORM DRAIN STRUCTURE.

5. FOR OTHER UTILITY NOTES SEE DRAWING NO. DD-01.

GRAPHIC SCALE

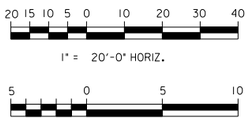

SHELADIA ASSOCIATES, INC.
Engineers, Architects Development Consultants
15825 Shady Grove Road, Rockville, MD. 20850
Phone: 301-590-3939 Fax:301-948-7174
www.sheladia.com

PSI
Precision Systems, Inc.
Engineers, Planners and Architects
WASHINGTON, D.C.

NO	DESCRIPTION	NAME	DATE

REVISIONS

DP-07

D.C. DEPARTMENT OF TRANSPORTATION
INFRASTRUCTURE PROJECT MANAGEMENT ADMINISTRATION
PROJECT MANAGEMENT DIVISION

KENNEDY STREET, N.W. IMPROVEMENT
FROM GEORGIA AVENUE TO NORTH CAPITOL STREET

PROJECT ENG. ____
DESIGNED BY SZ
CHECKED BY SS
DRAWN BY BH
PROJECT MGR. TS

DIVISION CHIEF

DATE ____
FILE ____
SHEET 89 OF 173

STORMDRAIN PROFILE

$PLTDRVL$
$PENTBL$
Tuesday, July 28, 2015 AT 05:36 PM
$FILEL$
$SHEETSIZE$$SCALESHORT$

REG	STATE	PROJECT	SHEET NO.	TOTAL SHEETS
3	D.C.	FAP No. STP-8888(480)	90	173

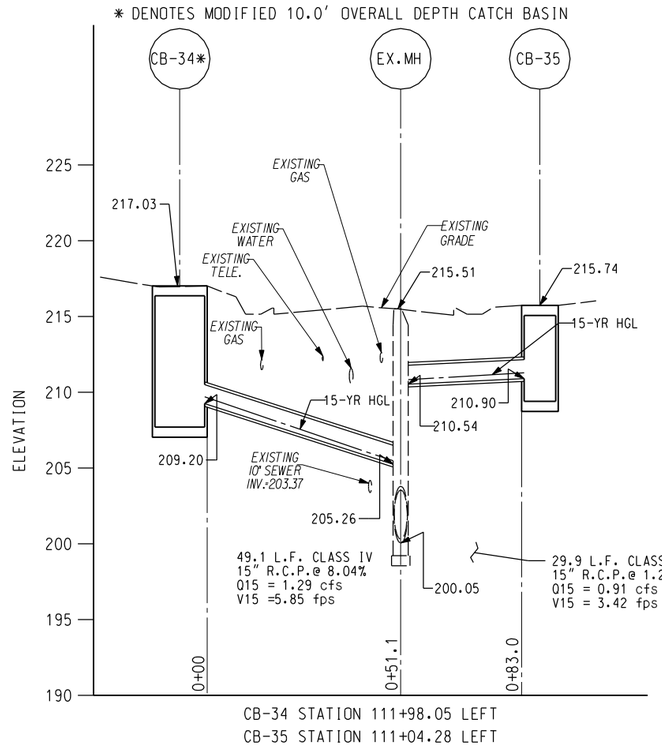

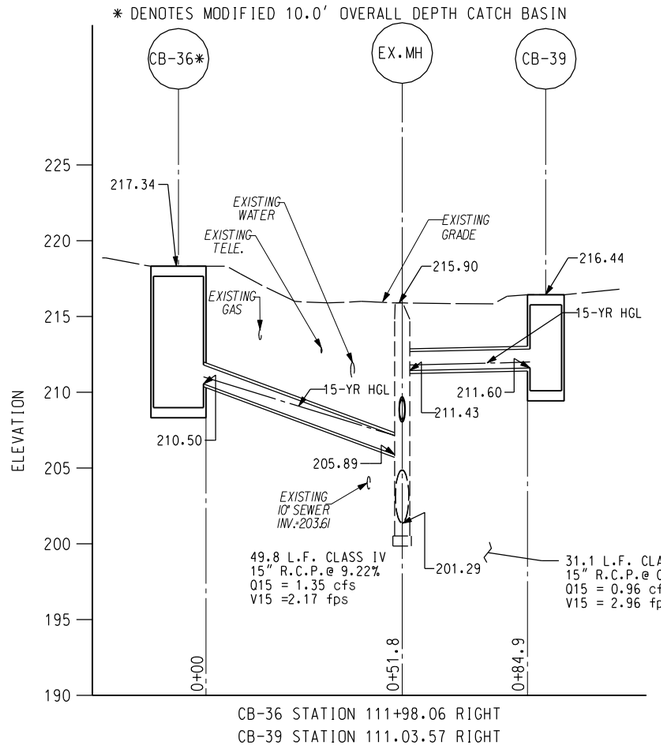

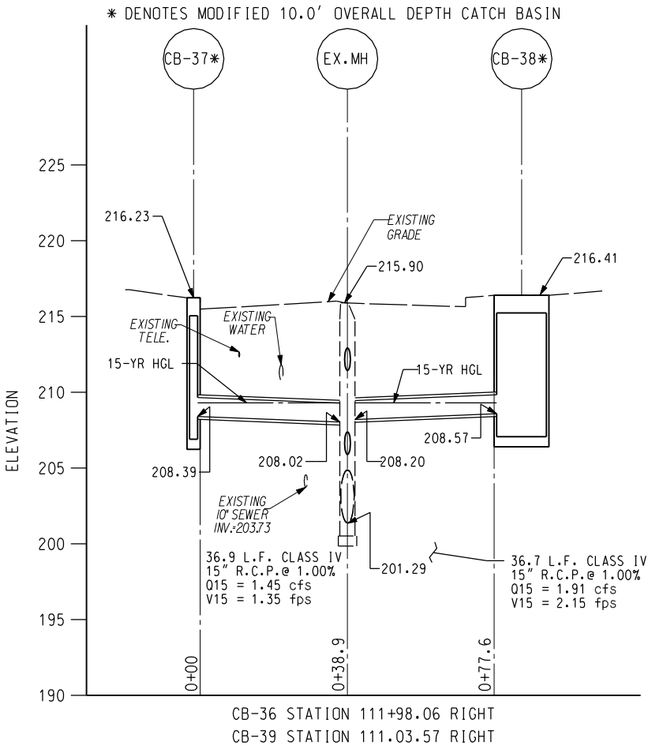

NOTES:

1. FOR PLAN VIEW, STORMDRAIN STRUCTURE AND PIPE SCHEDULE SEE DRAWINGS:
   PROFILE #1 - - - - - - - DD-11
   PROFILE #2 - - - - - - - DD-11
   PROFILE #3 - - - - - - - DD-11

GRAPHIC SCALE

20 15 10 5 0 10 20 30 40

1" = 20'-0" HORIZ.

5 0 5 10

1" = 5'-0" VERT.

NOTES FOR UTILITY CROSSINGS:

1. ALL EXISTING UTILITIES CROSSING STORMDRAINS ARE PLOTTED WITH ASSUMED COVER AS FOLLOWS:

   WATER LINE: 4'
   GAS LINE: 3'
   ELECTRIC LINE: 3'
   TELE. COM. LINE: 3'

2. TEST PIT WILL BE REQUESTED FOR ALL UTILITIES THAT CROSSES THE PROPOSED STORM DRAIN PIPE.

3. ONCE THE TEST PIT DATA IS AVAILABLE, THE EXISTING UTILITY LINES WILL BE RELOCATED AND/OR ADJUSTED VERTICALLY IF UTILITY LINES ARE IN CONFLICT WITH STORMDRAIN PIPES OR CLEARANCE IS LESS THAN 1 FOOT.

4. EXISTING UNDERGROUND UTILITY WILL BE RELOCATED IF THERE IS HORIZONTAL CONFLICT WITH PROPOSED STORM DRAIN STRUCTURE.

5. FOR OTHER UTILITY NOTES SEE DRAWING NO. DD-01.

SHELADIA ASSOCIATES, INC.
Engineers, Architects
Development Consultants
15825 Shady Grove Road, Rockville, MD. 20850
Phone: 301-590-3939 Fax:301-948-7174
www.sheladia.com

PSI
Precision Systems, Inc.
Engineers, Planners and Architects
WASHINGTON, D.C.

NO	DESCRIPTION	NAME	DATE

REVISIONS

DP-08

D.C. DEPARTMENT OF TRANSPORTATION
INFRASTRUCTURE PROJECT MANAGEMENT ADMINISTRATION
PROJECT MANAGEMENT DIVISION

KENNEDY STREET, N.W. IMPROVEMENT
FROM GEORGIA AVENUE TO NORTH CAPITOL STREET

PROJECT ENG. ____
DESIGNED BY SZ
CHECKED BY SS
DRAWN BY BH
PROJECT MGR. TS

STORMDRAIN PROFILE

DIVISION CHIEF
DATE ____
FILE ____
SHEET 90 OF 173

$PLTDRVL$
$PENTBL$
Tuesday, July 28, 2015 AT 05:36 PM
$FILEL$
$SHEETSIZE$$SCALESHORT$

REG	STATE	PROJECT	SHEET NO.	TOTAL SHEETS
3	D.C.	FAP No. STP-8888(480)	91	173

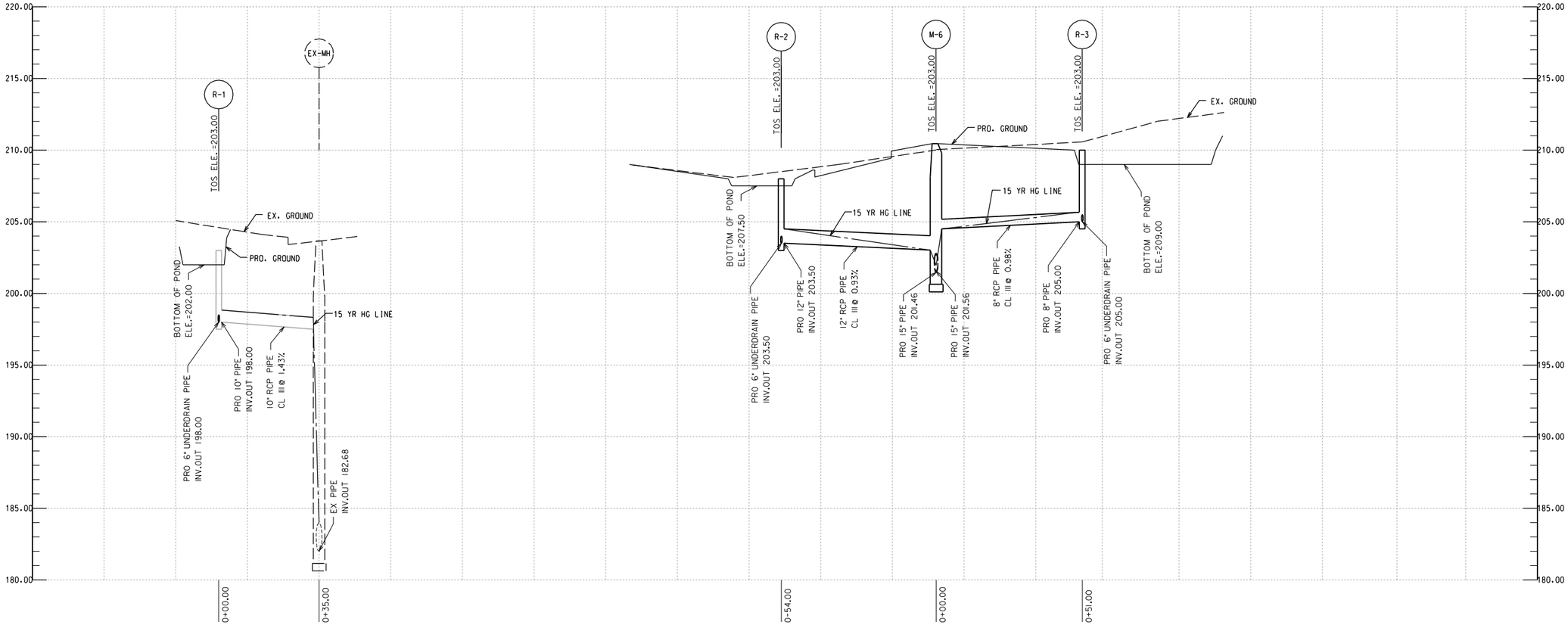

NOTE:

1. FOR PROPOSED 6" PERFORATED UNDERDRAIN PVC PIPE FOR BIORETENTION CELL, SEE DETAIL SW-01.

2. CONTRACTOR TO PROVIDE TEST PIT IN ORDER TO FIND THE INVERT ELEVATION OF THE EXISTING DRAINAGE STRUCTURES.

GRAPHIC SCALE

20 10 0 20 40

1" = 20'-0" HORIZ.

PSI
Precision Systems, Inc.
Engineers, Planners and Architects
WASHINGTON, D.C.

NO	DESCRIPTION	NAME	DATE

REVISIONS

DP-01

D.C. DEPARTMENT OF TRANSPORTATION
INFRASTRUCTURE PROJECT MANAGEMENT ADMINISTRATION
PROJECT MANAGEMENT DIVISION

KENNEDY STEET, N.W. IMPROVEMENT
FROM GEORGIA AVENUE TO NORTH CAPITOL STREET

PROJECT ENG. WZ
DESIGNED BY AYY
CHECKED BY MYH
DRAWN BY WZ/YZ
PROJECT MGR. AYY

BIO-RETENTION POND
CONNECTION PIPE PROFILE

DIVISION CHIEF

DATE

FILE

SHEET 91 OF 173

p:\60570\civil\plans\pDP-V001.60570.dgn
Tuesday, July 28, 2015 AT 03:45 PM
$PLTDRVS$
$PENTBLS$

REG	STATE	PROJECT	SHEET NO.	TOTAL SHEETS
3	D.C.	FAP No. STP-8888(480)	92	173

DISTRICT OF COLUMBIA
WATER AND SEWER AUTHORITY — S-20.01 1 OF 1

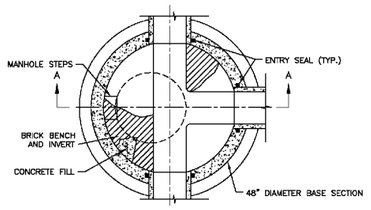

SECTIONAL PLAN

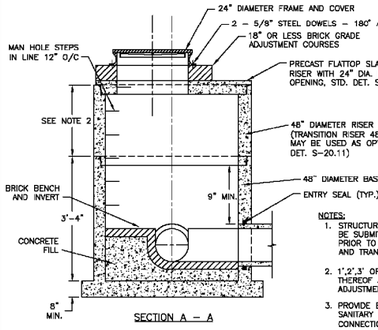

SECTION A – A

NOTES:
1. STRUCTURAL CALCULATIONS MUST BE SUBMITTED FOR APPROVAL PRIOR TO MANUFACTURE OF BASE AND TRANSITION SLABS.
2. 1',2',3' OR 4' OR A OMBINATION THEREOF AS NEEDED FOR GRADE ADJUSTMENT
3. PROVIDE ENTRY SEALS ON SANITARY AND COMBINED SEWER CONNECTIONS 24" AND SMALLER.

APPROVED DATE: June 20, 2003	REVISION NO.: 0	STANDARD DETAIL
DIRECTOR, DEPARTMENT OF ENGINEERING AND TECHNICAL SERVICES	DATE: 6/20/03	PRECAST CONCRETE MANHOLE
	PREPARED BY: OBG/BKJV	FOR NEW 10" THRU 21" DIAMETER SEWERS
	CHECKED BY: W.DARROW	(48" DIAMETER PRECAST BASE)

DISTRICT OF COLUMBIA
WATER AND SEWER AUTHORITY — S-20.22 1 OF 1

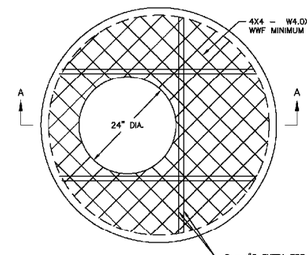

SECTIONAL PLAN

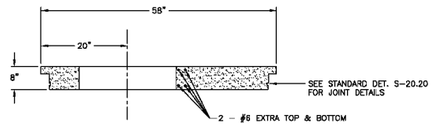

SECTION A – A

NOTES:
1. ALL CONCRETE TO BE CLASS 4000, AIR ENTRAINED, TYPE II CEMENT
2. REINFORCING STEEL SHALL CONFORM TO ASTM A615, GRADE 60
3. WWF PER ASTM A185

APPROVED DATE: June 20, 2003	REVISION NO.: 0	STANDARD DETAIL
DIRECTOR, DEPARTMENT OF ENGINEERING AND TECHNICAL SERVICES	DATE: 6/20/03	PRECAST FLATTOP SLAB
	PREPARED BY: OBG/BKJV	FOR 48" DIAMETER MANHOLE RISER
	CHECKED BY: W.DARROW	WITH 24" DIAMETER ECCENTRIC OPENING

DISTRICT OF COLUMBIA
WATER AND SEWER AUTHORITY — S-30.01 1 OF 1

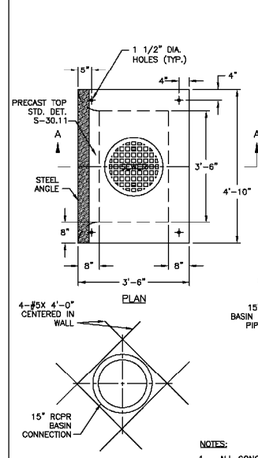

ADD'L REINFORCING AT OPENING

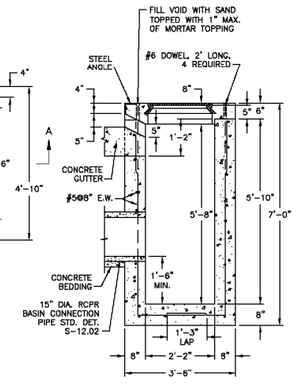

SECTION A – A

NOTES:
1. ALL CONCRETE TO BE CLASS 4000, AIR ENTRAINED,TYPE II CEMENT
2. REINFORCING SHALL BE CENTERED IN WALLS AND BASE AND SHALL CONFORM TO ASTM AC15 GRADE 60.

APPROVED DATE: June 20, 2003	REVISION NO.: 0	STANDARD DETAIL
DIRECTOR, DEPARTMENT OF ENGINEERING AND TECHNICAL SERVICES	DATE: 6/20/03	STANDARD CATCH BASIN
	PREPARED BY: OBG/BKJV	
	CHECKED BY: W.DARROW	

DISTRICT OF COLUMBIA
WATER AND SEWER AUTHORITY — S-30.20 1 OF 2

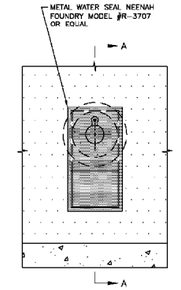

FRONT ELEVATION

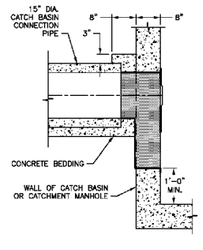

SECTION A–A

NOTES:
1. GRAY IRON CASTINGS PER ASTM A-48, CLASS 30A.
2. ALL MACHINE FINISH TO BE A.S.A. SPECIFICATION, ROUGHNESS SYMBOL 250, TOLERANCE -0" +1/16".
3. WHEN THE CATCH BASIN CONNECTION PIPE IS NOT PERPENDICULAR TO THE CATCH BASIN WALL, THE WALL SHALL BE MODIFIED TO INSTALL WATER SEAL ON SAME ALIGNMENT AS THE CATCH BASIN PIPE, SEE SECTIONAL PLAN, SHEET 2 OF 2 FOR TYPICAL DETAIL.

APPROVED DATE: June 20, 2003	REVISION NO.: 0	STANDARD DETAIL
DIRECTOR, DEPARTMENT OF ENGINEERING AND TECHNICAL SERVICES	DATE: 6/20/03	WATER SEAL FOR 15" DIAMETER
	PREPARED BY: OBG/BKJV	CATCH BASIN CONNECTION
	CHECKED BY: W.DARROW	(COMBINED AREA ONLY)

DISTRICT OF COLUMBIA
WATER AND SEWER AUTHORITY — S-30.03 2 OF 2

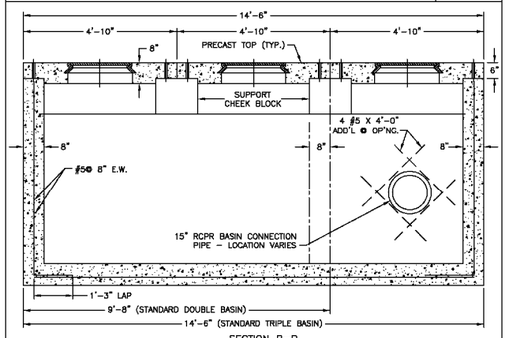

SECTION B–B

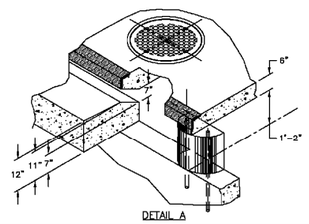

DETAIL A

APPROVED DATE: June 20, 2003	REVISION NO.: 0	STANDARD DETAIL
DIRECTOR, DEPARTMENT OF ENGINEERING AND TECHNICAL SERVICES	DATE: 6/20/03	STANDARD DOUBLE AND
	PREPARED BY: OBG/BKJV	STANDARD TRIPLE BASINS
	CHECKED BY: W.DARROW	

DISTRICT OF COLUMBIA
WATER AND SEWER AUTHORITY — S-30.03 1 OF 2

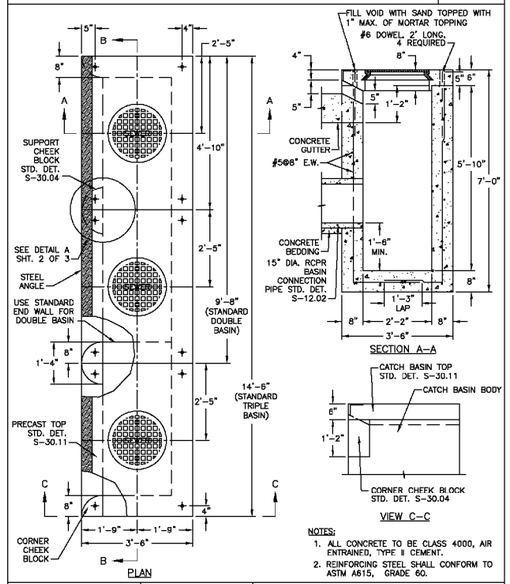

SECTION A–A

VIEW C–C

NOTES:
1. ALL CONCRETE TO BE CLASS 4000, AIR ENTRAINED, TYPE II CEMENT.
2. REINFORCING STEEL SHALL CONFORM TO ASTM A615, GRADE 60.

PLAN

APPROVED DATE: June 20, 2003	REVISION NO.: 0	STANDARD DETAIL
DIRECTOR, DEPARTMENT OF ENGINEERING AND TECHNICAL SERVICES	DATE: 6/20/03	STANDARD DOUBLE AND
	PREPARED BY: OBG/BKJV	STANDARD TRIPLE BASINS
	CHECKED BY: W.DARROW	

DISTRICT OF COLUMBIA
WATER AND SEWER AUTHORITY — S-30.20 2 OF 2

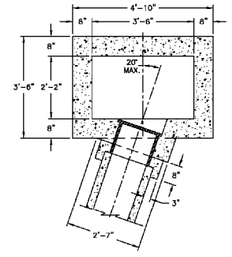

SECTIONAL PLAN

APPROVED DATE: June 20, 2003	REVISION NO.: 0	STANDARD DETAIL
DIRECTOR, DEPARTMENT OF ENGINEERING AND TECHNICAL SERVICES	DATE: 6/20/03	TYPICAL FOR NON-PERPENDICULAR
	PREPARED BY: OBG/BKJV	CATCH BASIN CONNECTION PIPE
	CHECKED BY: W.DARROW	

DD-13

D.C. DEPARTMENT OF TRANSPORTATION
INFRASTRUCTURE PROJECT MANAGEMENT ADMINISTRATION
PROJECT MANAGEMENT DIVISION

KENNEDY STREET, N.W. IMPROVEMENT
FROM GEORGIA AVENUE TO NORTH CAPITOL STREET

PROJECT ENG. ____
DESIGNED BY SZ
CHECKED BY SS
DRAWN BY BH
PROJECT MGR. TS

STANDARD DETAILS
CATCH BASIN AND MANHOLE

DIVISION CHIEF
DATE ____
FILE ____
SHEET 92 OF 173

SHELADIA ASSOCIATES, INC.
Engineers, Architects Development Consultants
15825 Shady Grove Road, Rockville, MD. 20850
Phone: 301-590-3939 Fax:301-948-7174
www.sheladia.com

PSI
Precision Systems, Inc.
Engineers, Planners and Architects
WASHINGTON, D.C.

NO.	DESCRIPTION	NAME	DATE

REVISIONS

$PENTBL$
Tuesday, July 28, 2015 AT 05:37 PM
$PLTDRVL$
$FILEL$
$SHEETSIZE$$SCALESHORT$

REG	STATE	PROJECT	SHEET NO.	TOTAL SHEETS
3	D.C.	FAP No. STP-8888(480)	93	173

DISTRICT OF COLUMBIA
WATER AND SEWER AUTHORITY — S-30.04 1 OF 1

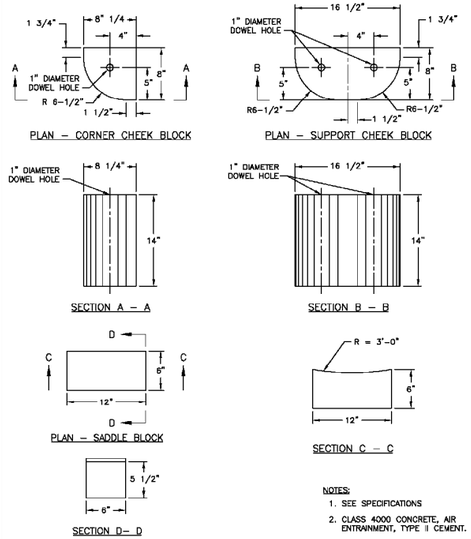

NOTES:
1. SEE SPECIFICATIONS
2. CLASS 4000 CONCRETE, AIR ENTRAINMENT, TYPE II CEMENT.

APPROVED DATE: June 20, 2003	REVISION NO.: 0	STANDARD DETAIL
DIRECTOR, DEPARTMENT OF ENGINEERING AND TECHNICAL SERVICES	DATE: 6/20/03	DETAILS FOR CHEEK BLOCKS AND SADDLE BLOCKS
	PREPARED BY: OBS/BKJV	
	CHECKED BY: W.DARROW	

DISTRICT OF COLUMBIA
WATER AND SEWER AUTHORITY — S-30.11 1 OF 1

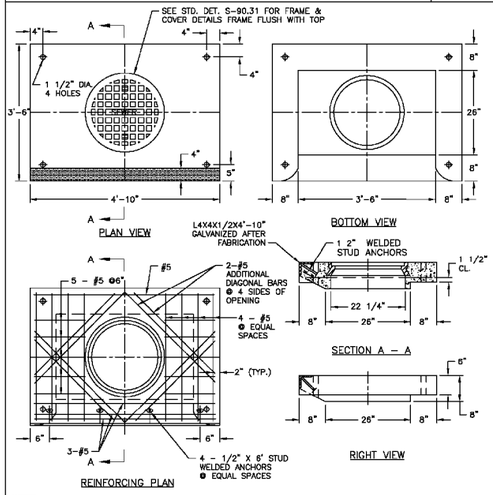

NOTES:
1. SEE SPECIFICATIONS
2. CLASS 4000 CONCRETE, AIR ENTRAINED, TYPE II CEMENT.
3. REINFORCING STEEL, ASTM A615, GRADE 60, 1 1/2" CLEAR COVER UNLESS NOTED
4. STEEL ANGLE PER ASTM A36, GALVANIZED PER ASTM A123
5. STUD ANCHORS SHALL BE LOW CARBON STEEL, ASTM A108, TYPE H4L NELSON HEADED ANCHORS WITH FLUXED ENDS, BY NELSON STUD WELDING CO. OR APPROVED EQUAL

APPROVED DATE: June 20, 2003	REVISION NO.: 0	STANDARD DETAIL
DIRECTOR, DEPARTMENT OF ENGINEERING AND TECHNICAL SERVICES	DATE: 6/20/03	8" PRECAST STANDARD CATCH BASIN TOP
	PREPARED BY: OBS/BKJV	
	CHECKED BY: W.DARROW	

DISTRICT OF COLUMBIA
WATER AND SEWER AUTHORITY — S-12.02 1 OF 1

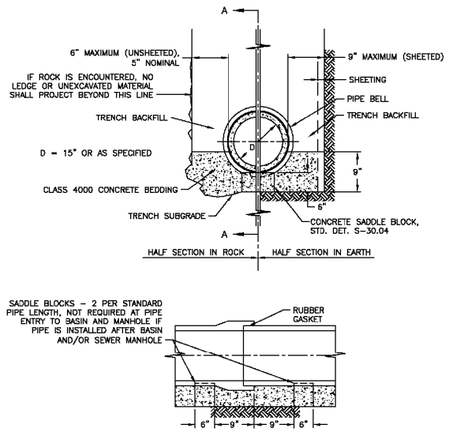

SECTION A – A

APPROVED DATE: June 20, 2003	REVISION NO.: 0	STANDARD DETAIL
DIRECTOR, DEPARTMENT OF ENGINEERING AND TECHNICAL SERVICES	DATE: 6/20/03	CATCH BASIN CONNECTION PIPE TRENCH LAYING CONDITION
	PREPARED BY: OBS/BKJV	
	CHECKED BY: W.DARROW	

DISTRICT OF COLUMBIA
WATER AND SEWER AUTHORITY — S-30.31 1 OF 2

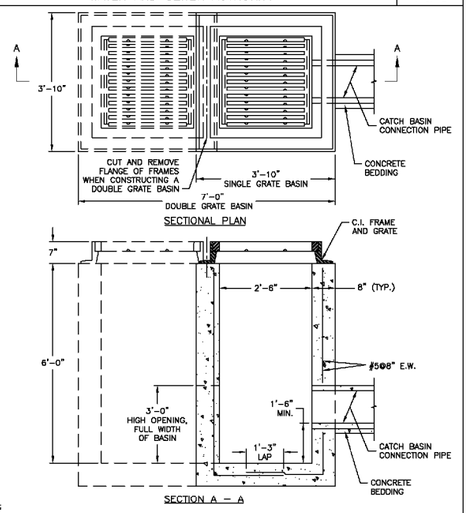

NOTES:
1. GRAY IRON CASTINGS PER ASTM A-48, CLASS 30A.
2. ALL MACHINE FINISH TO BE A.S.A. SPECIFICATION, ROUGHNESS SYMBOL 250, TOLERANCE – 0 + 1/16".
3. ALL CONCRETE TO BE CLASS 4000, AIR ENTRAINED, TYPE II CEMENT.
4. REINFORCING SHALL BE CENTERED IN WALL AND BASE AND SHALL CONFORM TO ASTM A615 GRADE 60.

APPROVED DATE: June 20, 2003	REVISION NO.: 0	STANDARD DETAIL
DIRECTOR, DEPARTMENT OF ENGINEERING AND TECHNICAL SERVICES	DATE: 6/20/03	GRATE TYPE CATCH BASIN WITH SAFETY GRATE
	PREPARED BY: OBS/BKJV	
	CHECKED BY: W.DARROW	

DISTRICT OF COLUMBIA
WATER AND SEWER AUTHORITY — S-30.31 2 OF 2

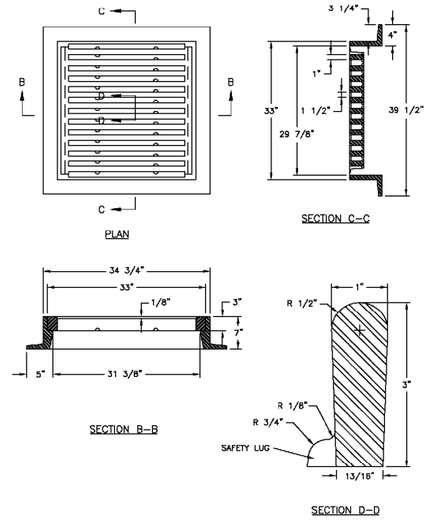

APPROVED DATE: June 20, 2003	REVISION NO.: 0	STANDARD DETAIL
DIRECTOR, DEPARTMENT OF ENGINEERING AND TECHNICAL SERVICES	DATE: 6/20/03	GRATE TYPE CATCH BASIN WITH SAFETY GRATE
	PREPARED BY: OBS/BKJV	
	CHECKED BY: W.DARROW	

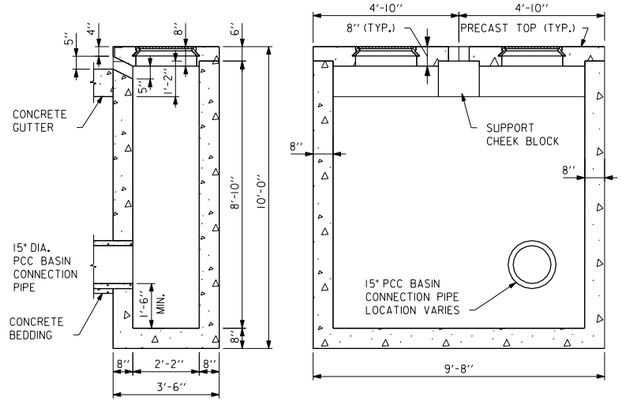

MODIFIED STANDARD DOUBLE BASIN

NOTES:
1. FOR PLAN VIEW, TOP OF SLAB DETAIL, MANHOLE COVER AND OTHER DETAILS NOT SHOWN, SEE DC WATER STD. DWG. NO. S-30.03 AS SHOWN ON DWG. DD-13.
2. INLET CAN BE PRECAST OR CAST IN-PLACE.
3. THE CONTRACTOR SHALL SUBMIT THE STRUCTURAL DESIGN FOR THIS CATCH BASIN TO DC WATER FOR APPROVAL.

DD-14

D.C. DEPARTMENT OF TRANSPORTATION
INFRASTRUCTURE PROJECT MANAGEMENT ADMINISTRATION
PROJECT MANAGEMENT DIVISION

KENNEDY STREET, N.W. IMPROVEMENT
FROM GEORGIA AVENUE TO NORTH CAPITOL STREET

PROJECT ENG. ____
DESIGNED BY SZ
CHECKED BY SS
DRAWN BY BH
PROJECT MGR. TS

STANDARD DETAILS
CATCH BASIN AND MANHOLE

DIVISION CHIEF
DATE ____
FILE ____
SHEET 93 OF 173

SHELADIA ASSOCIATES, INC.
Engineers, Architects Development Consultants
15825 Shady Grove Road, Rockville, MD. 20850
Phone: 301-590-3939 Fax:301-948-7174
www.sheladia.com

PSI
Precision Systems, Inc.
Engineers, Planners and Architects
WASHINGTON, D.C.

NO	DESCRIPTION	NAME	DATE

REVISIONS

$PENTBL$
Tuesday, July 28, 2015 AT 05:37 PM
$PLTDRVL$
$FILEL$
$SHEETSIZE$$SCALESHORT$

REG	STATE	PROJECT	SHEET NO.	TOTAL SHEETS
3	D.C.	FAP No. STP-8888(480)	94	173

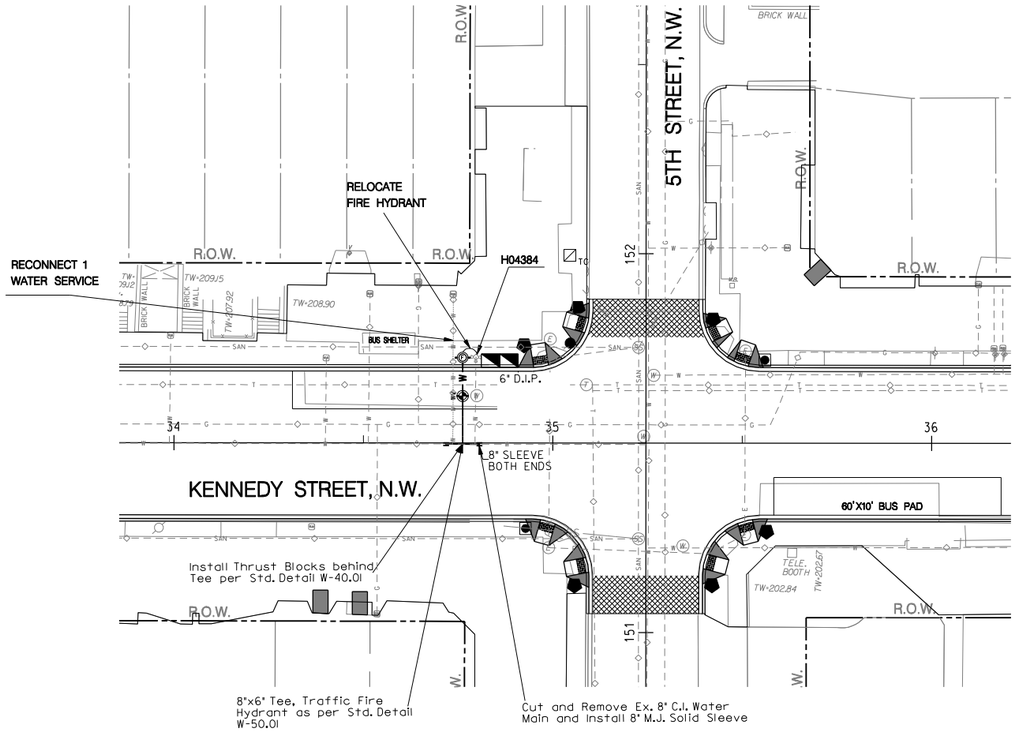

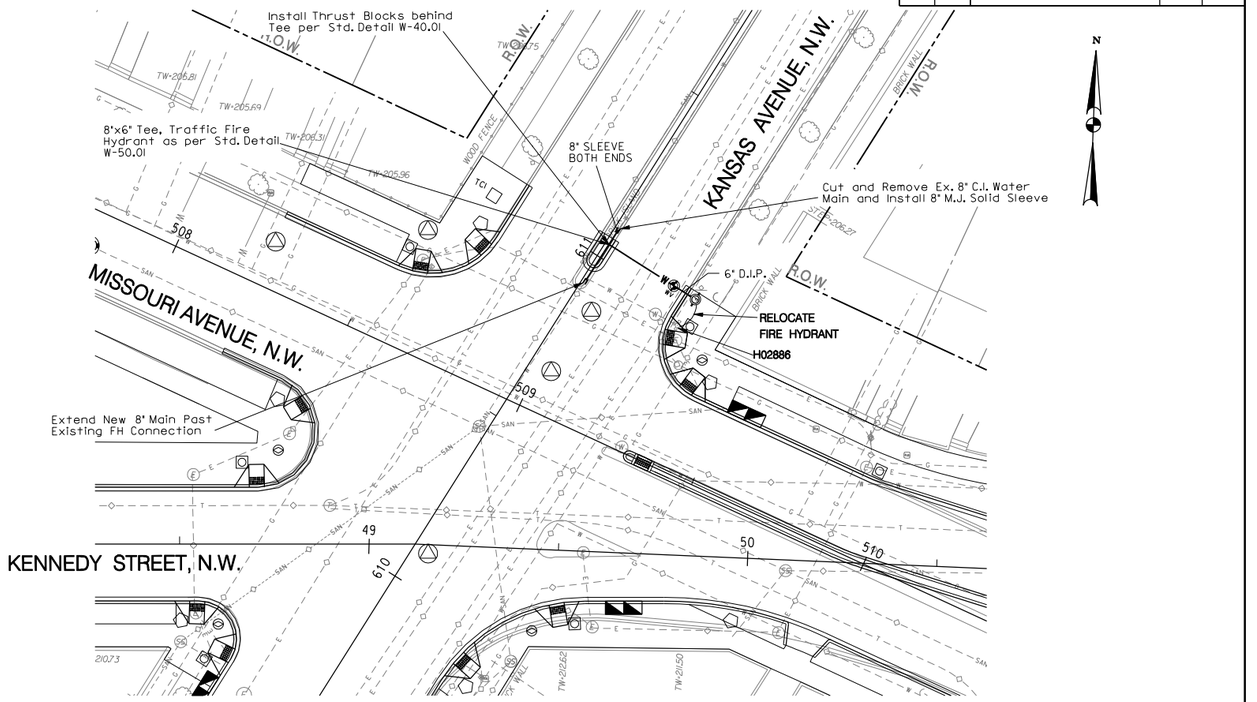

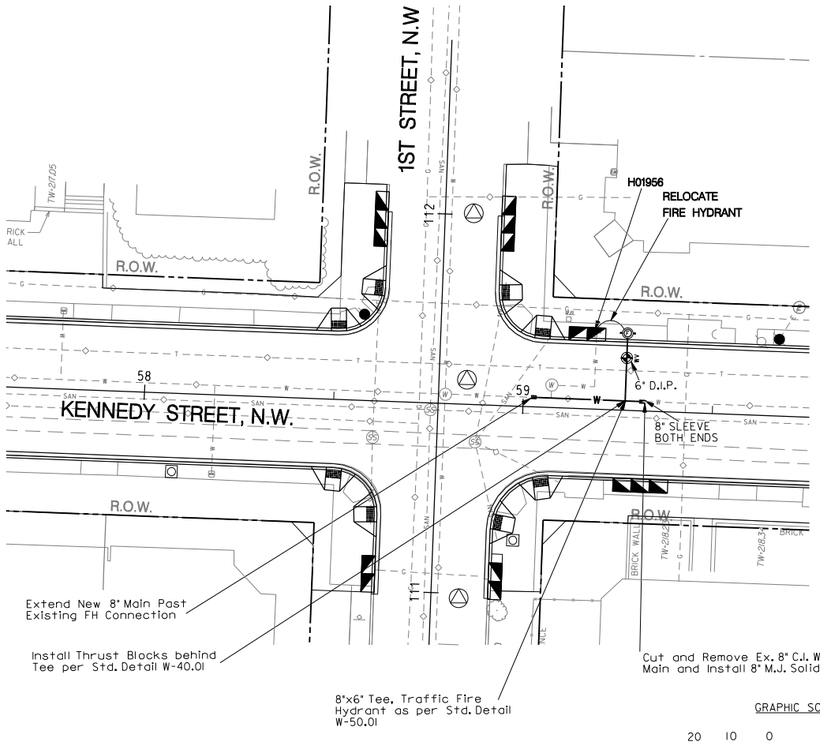

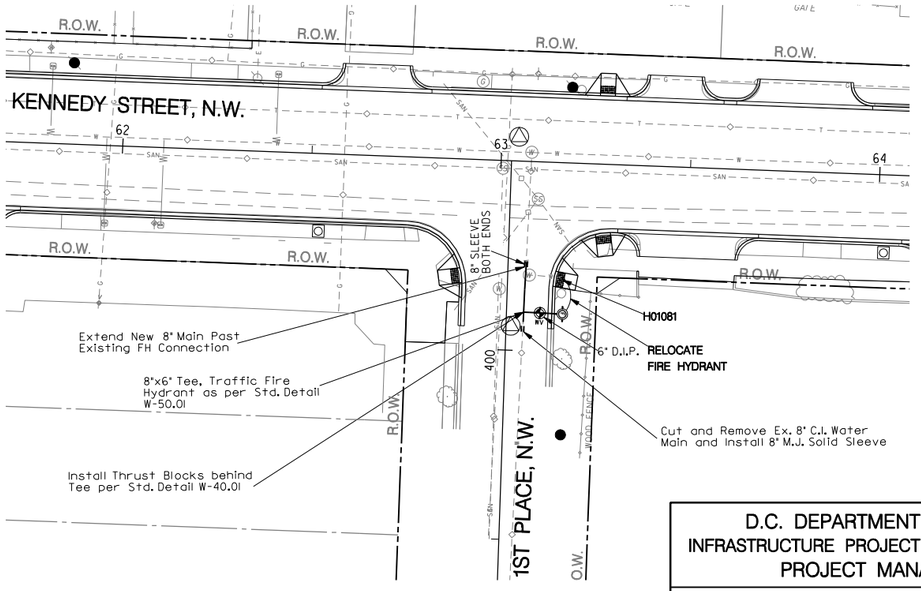

GRAPHIC SCALE

20 10 0 20 40

1" = 20'-0" HORIZ.

Precision Systems, Inc.
Engineers, Planners and Architects
WASHINGTON, D.C.

NO	DESCRIPTION	NAME	DATE

REVISIONS

WT-01

D.C. DEPARTMENT OF TRANSPORTATION
INFRASTRUCTURE PROJECT MANAGEMENT ADMINISTRATION
PROJECT MANAGEMENT DIVISION

KENNEDY STEET, N.W. IMPROVEMENT
FROM GEORGIA AVENUE TO NORTH CAPITOL STREET

PROJECT ENG. WZ
DESIGNED BY AYY
CHECKED BY MYH
DRAWN BY WZ/YZ
PROJECT MGR. AYY

FIRE HYDRANT RELOCATION PLAN – 1

DIVISION CHIEF
DATE
FILE
SHEET 94 OF 173

p:\60570\civil\plans\pWT_P001_60570.dgn $PENTBL$
Tuesday, July 28, 2015 AT 04:27 PM $PLTDRV$

REG	STATE	PROJECT	SHEET NO.	TOTAL SHEETS
3	D.C.	FAP No. STP-8888(480)	95	173

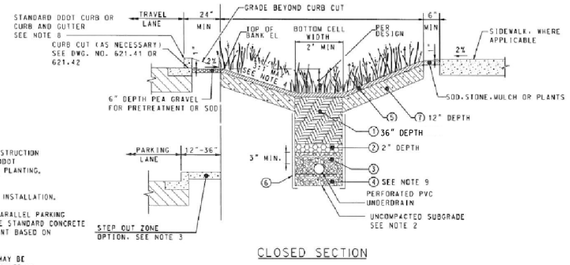

CLOSED SECTION

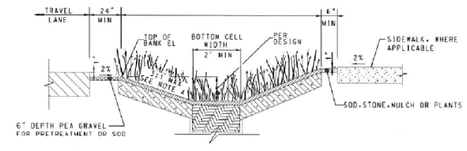

OPEN SECTION

NOTES:

1. BIORETENTION MATERIALS AND CONSTRUCTION SHALL MEET CURRENT APPROVED DDOT SPECIFICATION FOR "BIORETENTION, PLANTING, AND STRUCTURAL SOILS".
2. SCARIFY SUBGRADE 3" MIN. BEFORE INSTALLATION.
3. STEP OUT ZONE REQUIRED WHEN PARALLEL PARKING IS PROVIDED. INSTALLATION MAY BE STANDARD CONCRETE SIDEWALK, SOD, MULCH OR PAVEMENT BASED ON SURROUNDING CONDITIONS.
4. SIDE SLOPES STEEPER THAN 3:1, MAY BE ALLOWED; HOWEVER, MUST BE INSTALLED IN ACCORDANCE WITH DDOT SPECIFICATIONS.
5. TREES AND PLANTINGS SHALL BE INSTALLED IN ACCORDANCE WITH DESIGN PLANS.
6. BOTTOM OF BIOSWALE SHALL BE AT LEAST 2' ABOVE THE SEASONAL HIGH WATER TABLE AND BEDROCK AS DETERMINED BY GEOTECHNICAL INVESTIGATION.
7. INSTALL TRAFFIC BARRIER PER DWG. NO. 605.04, AS NECESSARY BASED ON ROADWAY DESIGN.
8. OFFSET TO SWALE MAY BE REDUCED IF ALTERNATE EDGE TREATMENT IS USED. SEE DWG. NOS. 621.30 TO 621.32.
9. DEPTH OF INFILTRATION SUMP AS SHOWN ON DESIGN PLANS SHOULD BE SIZED TO ADDRESS STORMWATER MANAGEMENT REQUIREMENTS.

LEGEND:
① BIORETENTION SOIL
② CHOKER LAYER, SAND & GRAVEL
③ AASHTO #57 STONE, DOUBLE WASHED
④ INFILTRATION SUMP, AASHTO #57 STONE, DOUBLE WASHED
⑤ MULCH, PER PLANTING PLAN
⑥ GEOTEXTILE, CLASS 2
⑦ PLANT BED SOIL

RECOMMENDED:	DEPUTY CHIEF ENGINEER
APPROVED:	CHIEF TRANSPORTATION ENGINEER
DATE / APPR. / REVISED / ISSUED: / REFERENCE	

BIOSWALE ADJACENT TO ROADWAY

DISTRICT OF COLUMBIA
DEPARTMENT OF TRANSPORTATION

DWG. NO. 621.21

BIORETENTION POND ID	PONDING DEPTH (INCH)
BP-01	12
BP-02	6
BP-03	12

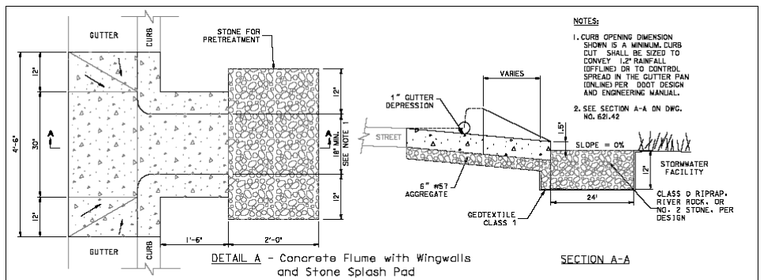

DETAIL A - Concrete Flume with Wingwalls and Stone Splash Pad

SECTION A-A

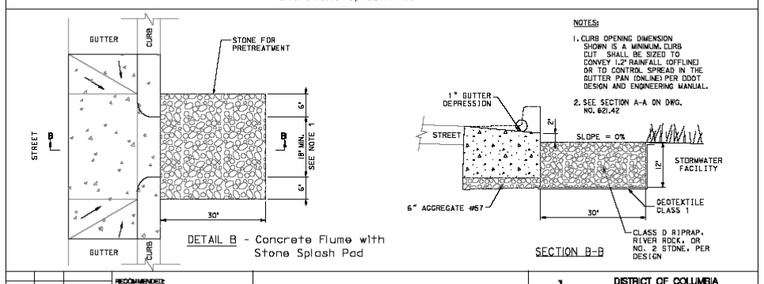

DETAIL B - Concrete Flume with Stone Splash Pad

SECTION B-B

RECOMMENDED:	DEPUTY CHIEF ENGINEER
APPROVED:	CHIEF TRANSPORTATION ENGINEER
DATE / APPR. / REVISED / ISSUED: / REFERENCE	

CURB CUT WITH SPLASH PAD - 1

DISTRICT OF COLUMBIA
DEPARTMENT OF TRANSPORTATION

DWG. NO. 621.41

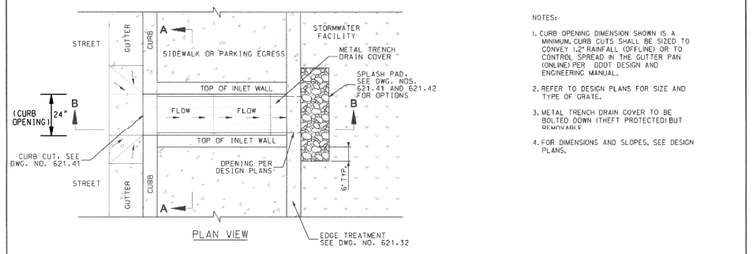

PLAN VIEW

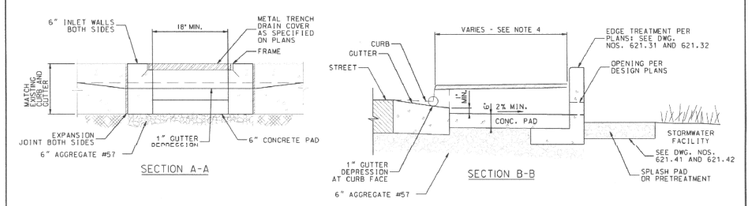

SECTION A-A

SECTION B-B

NOTES:

1. CURB OPENING DIMENSION SHOWN IS A MINIMUM. CURB CUTS SHALL BE SIZED TO CONVEY 1.2" RAINFALL (OFFLINE) OR TO CONTROL SPREAD IN THE GUTTER PAN (ONLINE) PER DDOT DESIGN AND ENGINEERING MANUAL.
2. REFER TO DESIGN PLANS FOR SIZE AND TYPE OF GRATE.
3. METAL TRENCH DRAIN COVER TO BE BOLTED DOWN (THEFT PROTECTED) BUT REMOVABLE.
4. FOR DIMENSIONS AND SLOPES, SEE DESIGN PLANS.

RECOMMENDED:	DEPUTY CHIEF ENGINEER
APPROVED:	CHIEF TRANSPORTATION ENGINEER
DATE / APPR. / REVISED / ISSUED: / REFERENCE	

CURB CUT METAL TRENCH DRAIN COVER-1

DISTRICT OF COLUMBIA
DEPARTMENT OF TRANSPORTATION

DWG. NO. 621.43

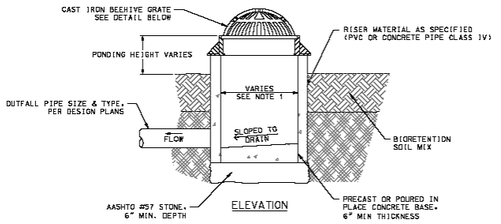

ELEVATION

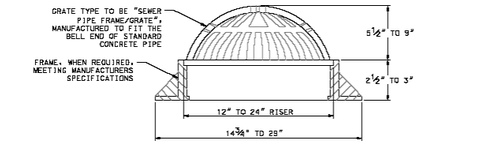

CAST IRON BEEHIVE GRATE DETAIL
SEE NOTE 1

NOTES:

1. MINIMUM OPENING SIZE IN GRATE SHALL BE 1¼" INCHES.
2. SIZE OF GRATE SHALL MATCH SIZE OF THE RISER, PER PLANS. SHALL FIT SNUG AND WATERTIGHT, AND SHALL BE REMOVEABLE FOR MAINTENANCE PURPOSES.
3. ALTERNATE MATERIAL TO CAST IRON SHALL BE ALLOWED AS APPROVED BY DDOT IPMA.

RECOMMENDED:	DEPUTY CHIEF ENGINEER
APPROVED:	CHIEF TRANSPORTATION ENGINEER
DATE / APPR. / REVISED / ISSUED: / REFERENCE	

OVERFLOW RISER WITH BEEHIVE GRATE

DISTRICT OF COLUMBIA
DEPARTMENT OF TRANSPORTATION

DWG. NO. 621.50

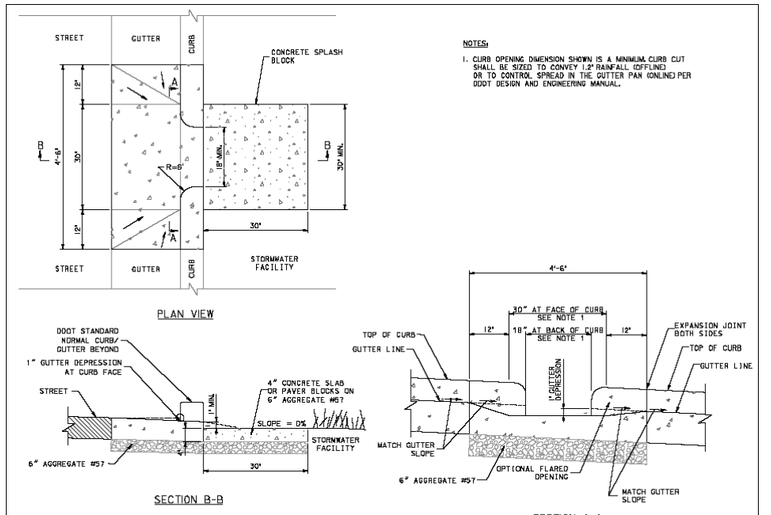

RECOMMENDED:	DEPUTY CHIEF ENGINEER
APPROVED:	CHIEF TRANSPORTATION ENGINEER
DATE / APPR. / REVISED / ISSUED: / REFERENCE	

CURB CUT WITH SPLASH PAD - 2

DISTRICT OF COLUMBIA
DEPARTMENT OF TRANSPORTATION

DWG. NO. 621.42

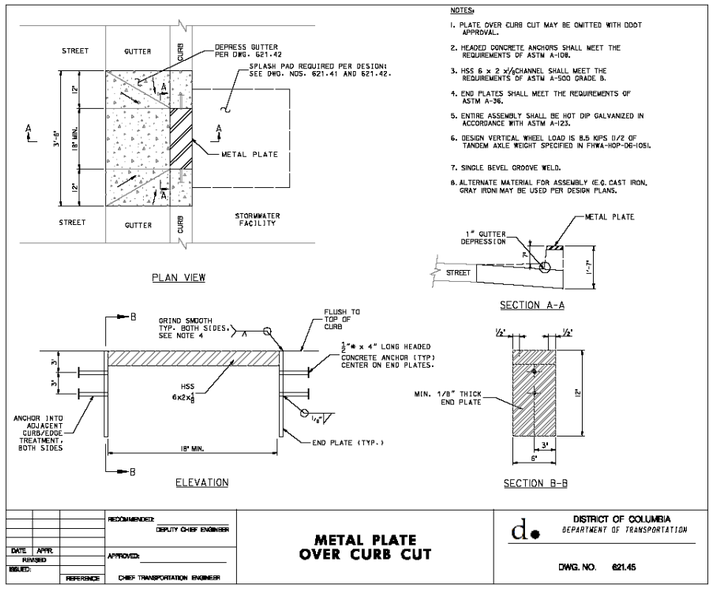

RECOMMENDED:	DEPUTY CHIEF ENGINEER
APPROVED:	CHIEF TRANSPORTATION ENGINEER
DATE / APPR. / REVISED / ISSUED: / REFERENCE	

METAL PLATE OVER CURB CUT

DISTRICT OF COLUMBIA
DEPARTMENT OF TRANSPORTATION

DWG. NO. 621.45

SW-01

Precision Systems, Inc.
Engineers, Planners and Architects
WASHINGTON, D.C.

NO.	DESCRIPTION	NAME	DATE
	REVISIONS		

D.C. DEPARTMENT OF TRANSPORTATION
INFRASTRUCTURE PROJECT MANAGEMENT ADMINISTRATION
PROJECT MANAGEMENT DIVISION

KENNEDY STEET, N.W. IMPROVEMENT
FROM GEORGIA AVENUE TO NORTH CAPITOL STREET

PROJECT ENG. WZ
DESIGNED BY AYY
CHECKED BY MYH
DRAWN BY WZ/YZ
PROJECT MGR. AYY

BIORETENTION POND DETAILS

DIVISION CHIEF
DATE
FILE
SHEET 95 OF 173

p:\60570\civil\plans\pSW_D001_60570.dgn
Tuesday, July 28, 2015 AT 04:28 PM
$PENTBLS$
$PLTDRVS$

REG	STATE	PROJECT	SHEET NO.	TOTAL SHEETS
3	D.C.	FAP No. STP-8888(480)	96	173

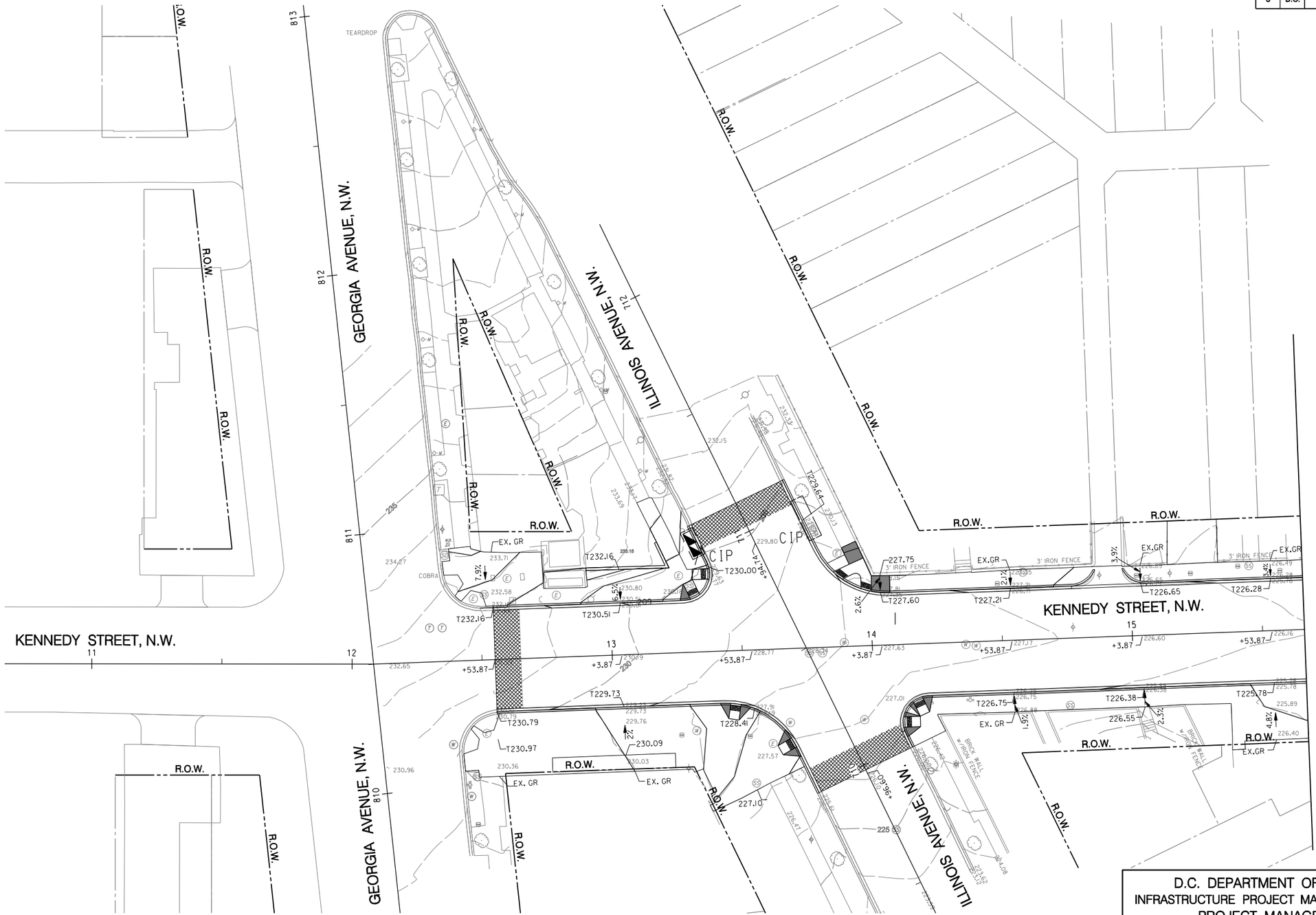

GRAPHIC SCALE

20 10 0 20 40

1" = 20'-0" HORIZ.

Precision Systems, Inc.
Engineers, Planners and Architects
WASHINGTON, D.C.

NO	DESCRIPTION	NAME	DATE

REVISIONS

GR-01

D.C. DEPARTMENT OF TRANSPORTATION
INFRASTRUCTURE PROJECT MANAGEMENT ADMINISTRATION
PROJECT MANAGEMENT DIVISION

KENNEDY STEET, N.W. IMPROVEMENT
FROM GEORGIA AVENUE TO NORTH CAPITOL STREET

PROJECT ENG. WZ
DESIGNED BY AYY
CHECKED BY MYH
DRAWN BY WZ/YZ
PROJECT MGR. AYY

GRADING
EROSION AND SEDIMENT CONTROL
PLAN – 1

DIVISION CHIEF
DATE
FILE
SHEET 96 OF 173

p:\60570\civil\plans\pGR_P001_60570.dgn
Tuesday, July 28, 2015 AT 04:29 PM
$PLTDRVS$
$PENTBLS$

REG	STATE	PROJECT	SHEET NO.	TOTAL SHEETS
3	D.C.	FAP No. STP-8888(480)	97	173

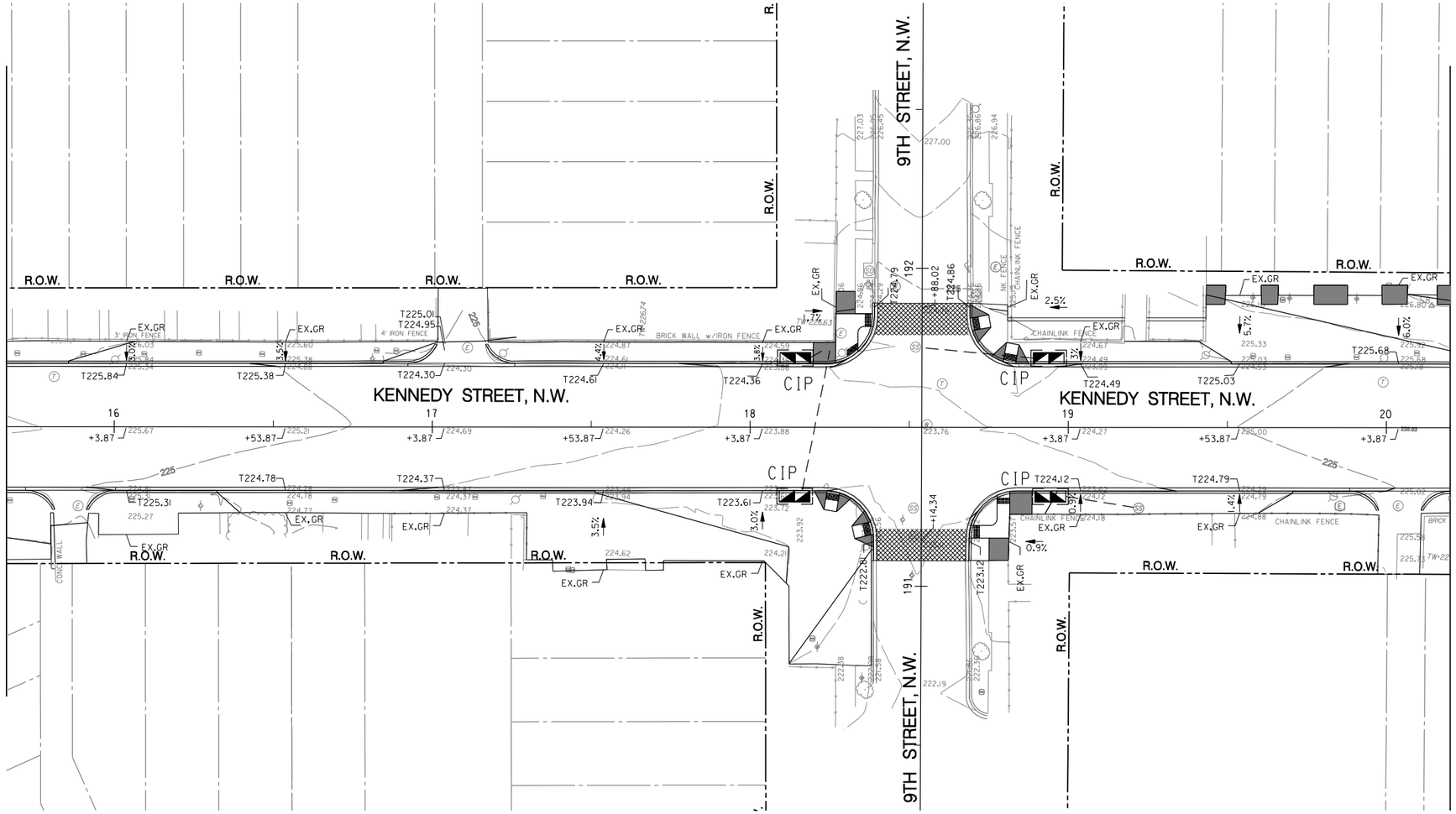

N

GR-02

GRAPHIC SCALE

20 10 0 20 40

1" = 20'-0" HORIZ.

Precision Systems, Inc.
Engineers, Planners and Architects
WASHINGTON, D.C.

NO	DESCRIPTION	NAME	DATE

REVISIONS

D.C. DEPARTMENT OF TRANSPORTATION
INFRASTRUCTURE PROJECT MANAGEMENT ADMINISTRATION
PROJECT MANAGEMENT DIVISION

KENNEDY STEET, N.W. IMPROVEMENT
FROM GEORGIA AVENUE TO NORTH CAPITOL STREET

PROJECT ENG. WZ
DESIGNED BY AYY
CHECKED BY MYH
DRAWN BY WZ/YZ
PROJECT MGR. AYY

GRADING
EROSION AND SEDIMENT CONTROL
PLAN – 2

DIVISION CHIEF
DATE
FILE
SHEET 97 OF 173

p:\60570\civil\plans\pGR_P002_60570.dgn
Tuesday, July 28, 2015 AT 04:29 PM
$PLTDRVS$
$PENTBLS$

REG	STATE	PROJECT	SHEET NO.	TOTAL SHEETS
3	D.C.	FAP No. STP-8888(480)	98	173

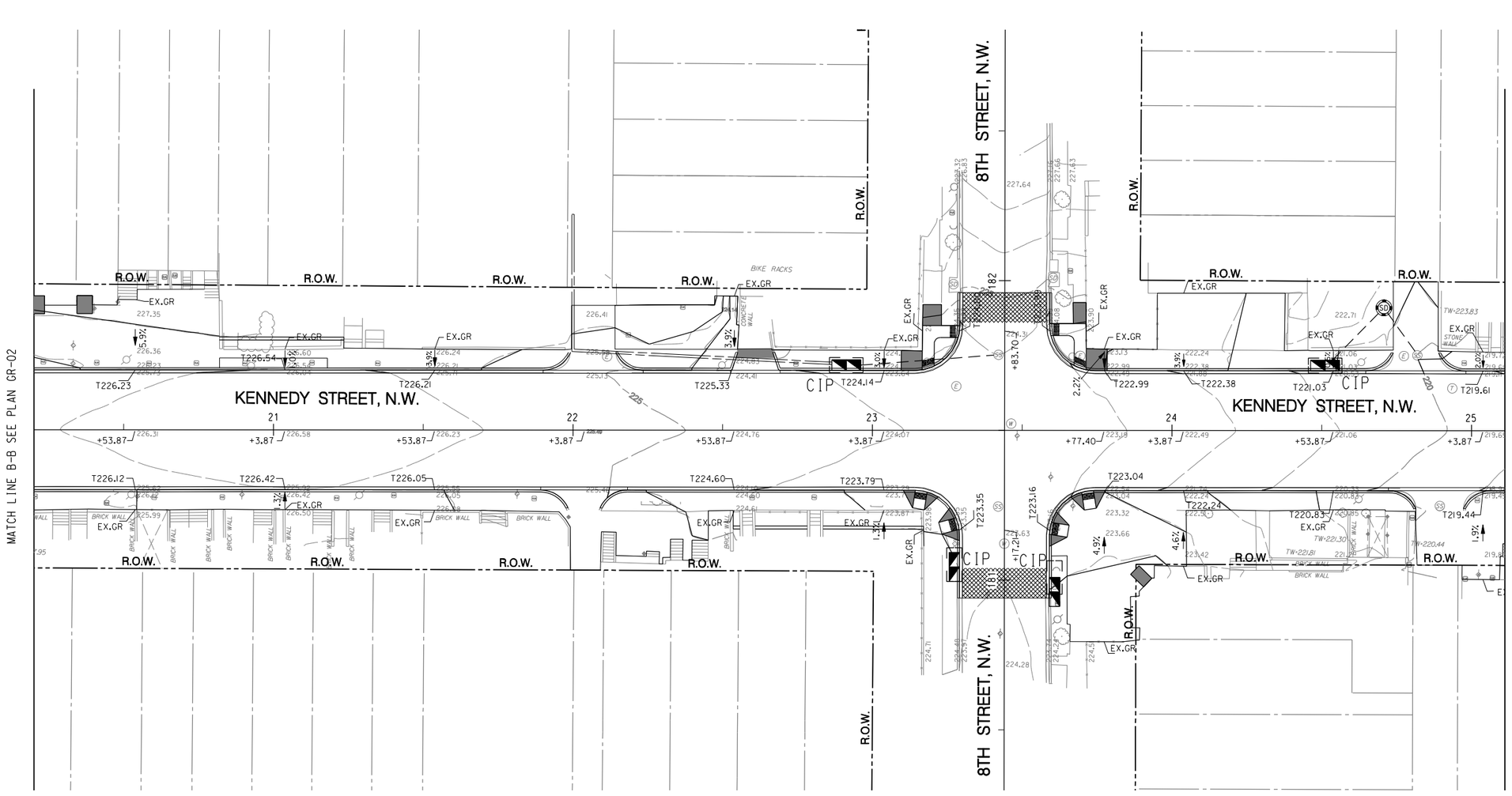

GRAPHIC SCALE

20 10 0 20 40

1" = 20'-0" HORIZ.

Precision Systems, Inc.
Engineers, Planners and Architects
WASHINGTON, D.C.

NO.	DESCRIPTION	NAME	DATE

REVISIONS

GR-03

D.C. DEPARTMENT OF TRANSPORTATION
INFRASTRUCTURE PROJECT MANAGEMENT ADMINISTRATION
PROJECT MANAGEMENT DIVISION

KENNEDY STEET, N.W. IMPROVEMENT
FROM GEORGIA AVENUE TO NORTH CAPITOL STREET

PROJECT ENG. WZ
DESIGNED BY AYY
CHECKED BY MYH
DRAWN BY WZ/YZ
PROJECT MGR. AYY

GRADING
EROSION AND SEDIMENT CONTROL
PLAN – 3

DIVISION CHIEF
DATE
FILE
SHEET 98 OF 173

p:\60570\civil\plans\pGR_P003_60570.dgn
Tuesday, July 28, 2015 AT 04:30 PM
$PENTBLS$
$PLTDRVS$

REG	STATE	PROJECT	SHEET NO.	TOTAL SHEETS
3	D.C.	FAP No. STP-8888(480)	99	173

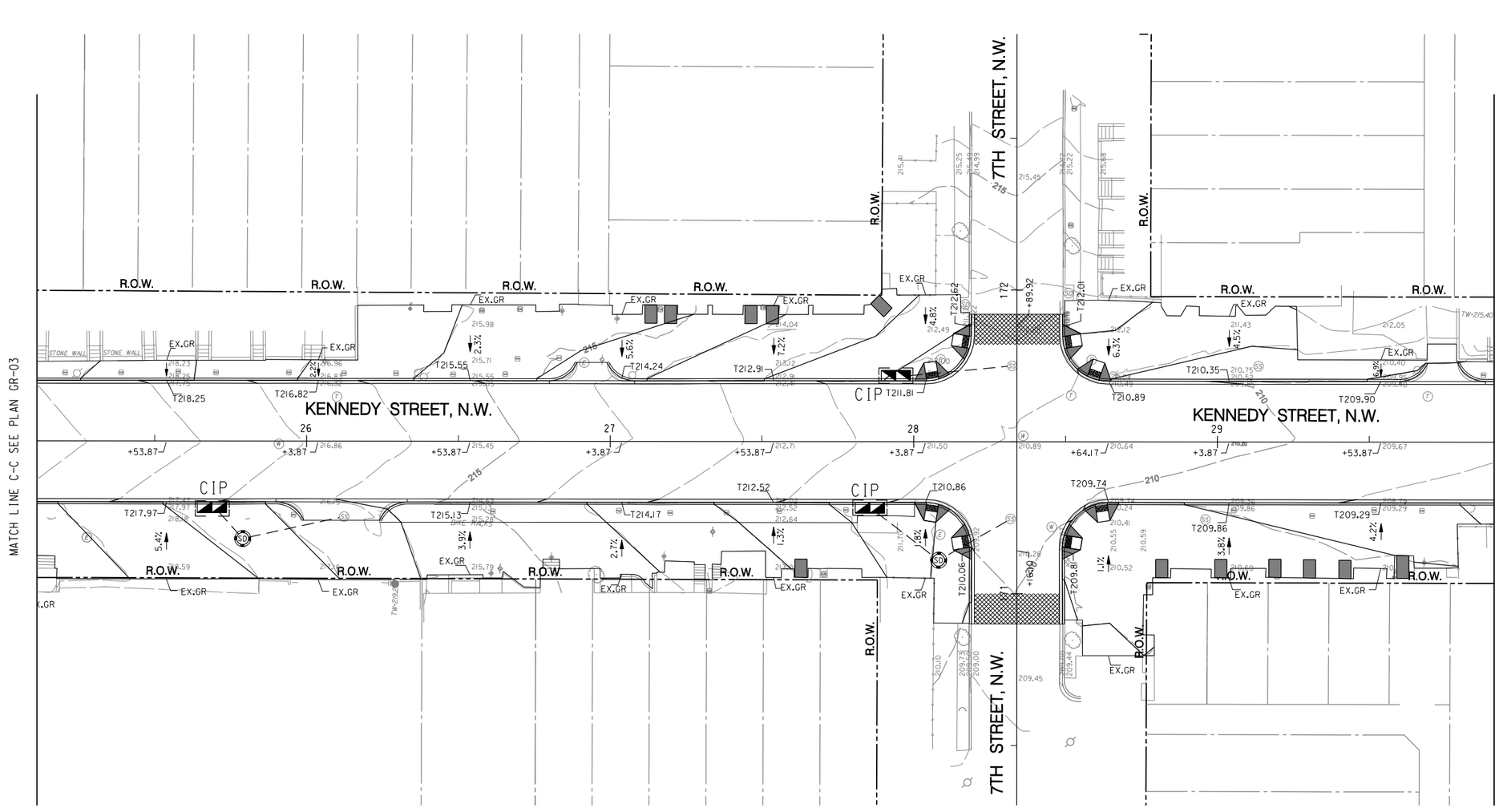

GRAPHIC SCALE

20 10 0 20 40

1" = 20'-0" HORIZ.

Precision Systems, Inc.
Engineers, Planners and Architects
WASHINGTON, D.C.

NO.	DESCRIPTION	NAME	DATE

REVISIONS

GR-04

D.C. DEPARTMENT OF TRANSPORTATION
INFRASTRUCTURE PROJECT MANAGEMENT ADMINISTRATION
PROJECT MANAGEMENT DIVISION

KENNEDY STEET, N.W. IMPROVEMENT
FROM GEORGIA AVENUE TO NORTH CAPITOL STREET

PROJECT ENG. WZ
DESIGNED BY AYY
CHECKED BY MYH
DRAWN BY WZ/YZ
PROJECT MGR. AYY

GRADING
EROSION AND SEDIMENT CONTROL
PLAN – 4

DIVISION CHIEF
DATE
FILE
SHEET 99 OF 173

p:\60570\civil\plans\pGR_P004_60570.dgn
Tuesday, July 28, 2015 AT 04:30 PM
$PENTBLS$
$PLTDRVS$

REG	STATE	PROJECT	SHEET NO.	TOTAL SHEETS
3	D.C.	FAP No. STP-8888(480)	100	173

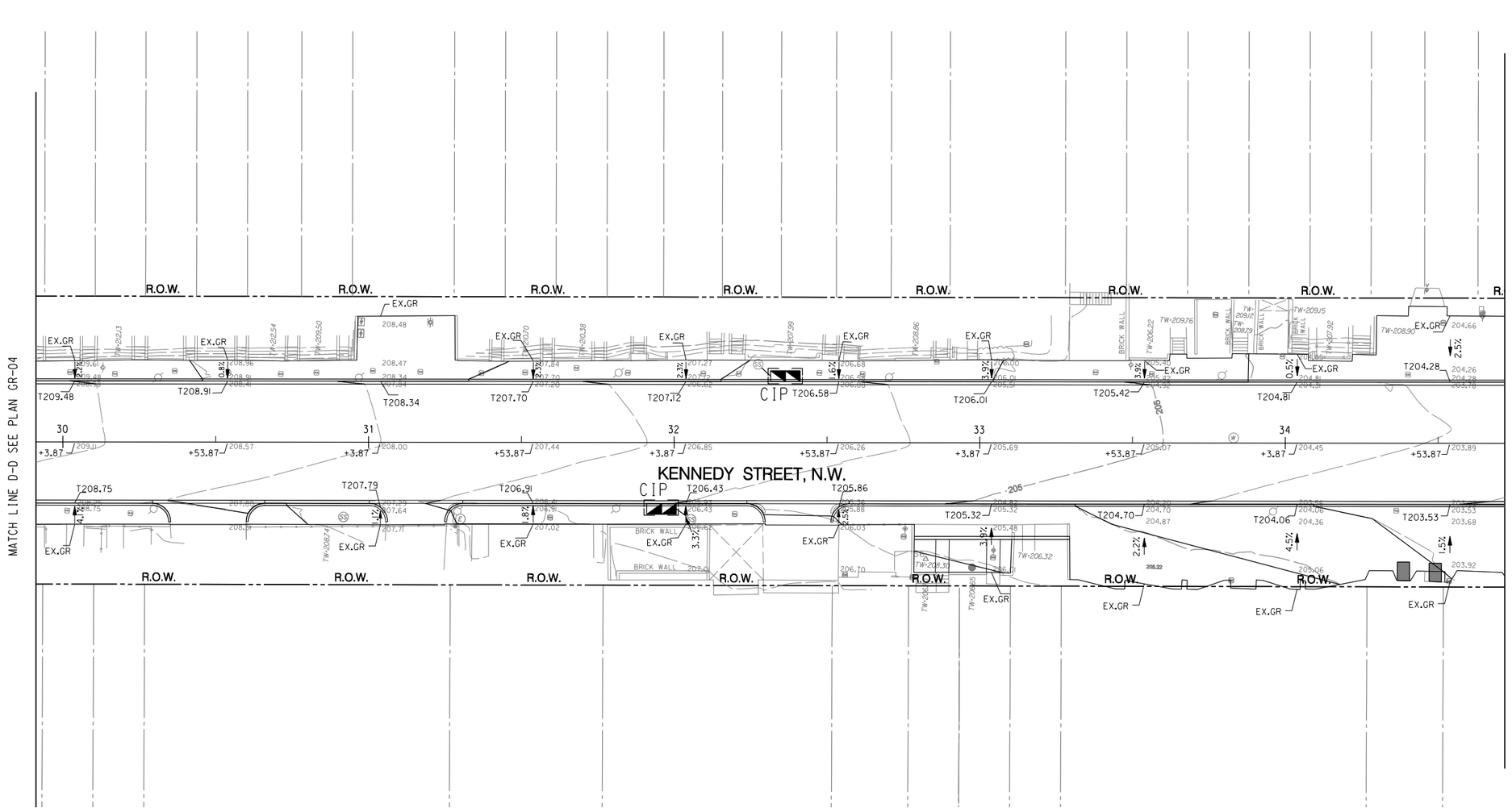

GRAPHIC SCALE

20 10 0 20 40

1" = 20'-0" HORIZ.

Precision Systems, Inc.
Engineers, Planners and Architects
WASHINGTON, D.C.

NO	DESCRIPTION	NAME	DATE

REVISIONS

GR-05

D.C. DEPARTMENT OF TRANSPORTATION
INFRASTRUCTURE PROJECT MANAGEMENT ADMINISTRATION
PROJECT MANAGEMENT DIVISION

KENNEDY STEET, N.W. IMPROVEMENT
FROM GEORGIA AVENUE TO NORTH CAPITOL STREET

PROJECT ENG. WZ
DESIGNED BY AYY
CHECKED BY MYH
DRAWN BY WZ/YZ
PROJECT MGR. AYY

GRADING
EROSION AND SEDIMENT CONTROL
PLAN – 5

DIVISION CHIEF
DATE
FILE
SHEET 100 OF 173

p:\60570\civil\plans\pGR_P005_60570.dgn
Tuesday, July 28, 2015 AT 04:30 PM
$PENTBLS$
$PLTDRVS$

REG	STATE	PROJECT	SHEET NO.	TOTAL SHEETS
3	D.C.	FAP No. STP-8888(480)	101	173

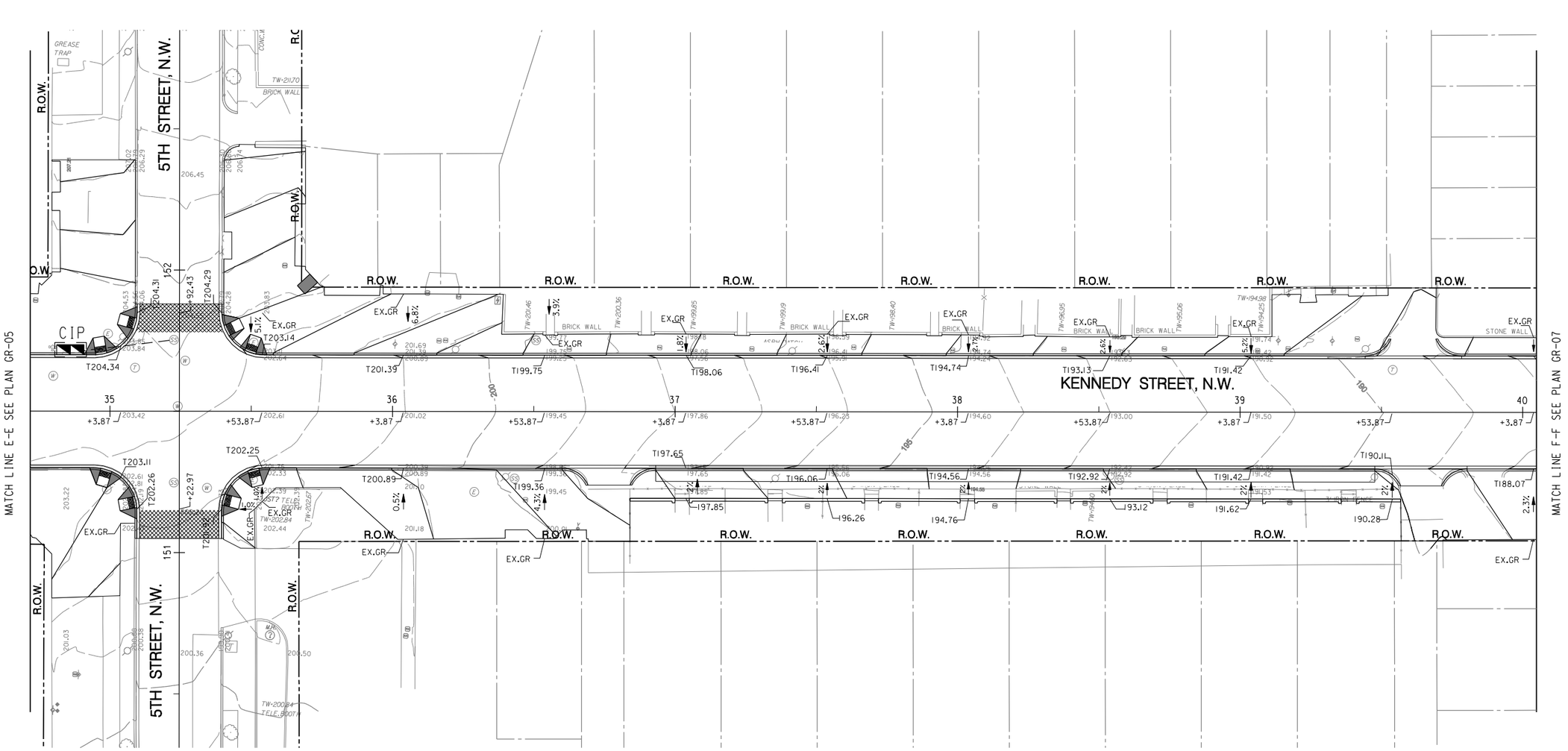

GR-06

GRAPHIC SCALE

20 10 0 20 40

1" = 20'-0" HORIZ.

Precision Systems, Inc.
Engineers, Planners and Architects
WASHINGTON, D.C.

NO	DESCRIPTION	NAME	DATE

REVISIONS

D.C. DEPARTMENT OF TRANSPORTATION
INFRASTRUCTURE PROJECT MANAGEMENT ADMINISTRATION
PROJECT MANAGEMENT DIVISION

KENNEDY STEET, N.W. IMPROVEMENT
FROM GEORGIA AVENUE TO NORTH CAPITOL STREET

PROJECT ENG. WZ
DESIGNED BY AYY
CHECKED BY MYH
DRAWN BY WZ/YZ
PROJECT MGR. AYY

GRADING
EROSION AND SEDIMENT CONTROL
PLAN – 6

DIVISION CHIEF
DATE
FILE
SHEET 101 OF 173

p:\60570\civil\plans\pGR_P006_60570.dgn
Tuesday, July 28, 2015 AT 04:31 PM
$PENTBLS$
$PLTDRVS$

REG	STATE	PROJECT	SHEET NO.	TOTAL SHEETS
3	D.C.	FAP No. STP-8888(480)	102	173

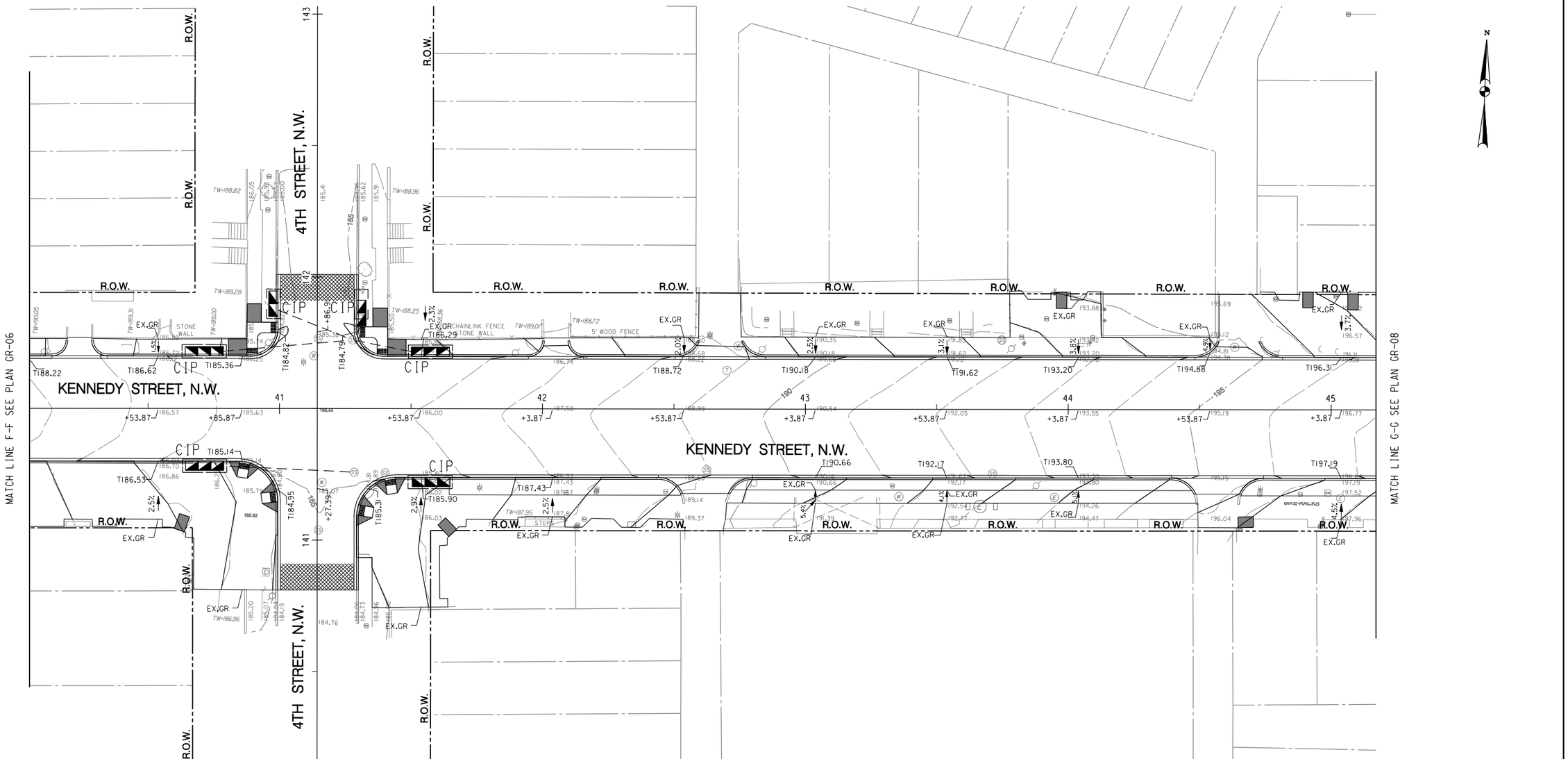

GRAPHIC SCALE

20 10 0 20 40

1" = 20'-0" HORIZ.

Precision Systems, Inc.
Engineers, Planners and Architects
WASHINGTON, D.C.

NO	DESCRIPTION	NAME	DATE

REVISIONS

GR-07

D.C. DEPARTMENT OF TRANSPORTATION
INFRASTRUCTURE PROJECT MANAGEMENT ADMINISTRATION
PROJECT MANAGEMENT DIVISION

KENNEDY STEET, N.W. IMPROVEMENT
FROM GEORGIA AVENUE TO NORTH CAPITOL STREET

PROJECT ENG. WZ
DESIGNED BY AYY
CHECKED BY MYH
DRAWN BY WZ/YZ
PROJECT MGR. AYY

GRADING
EROSION AND SEDIMENT CONTROL
PLAN – 7

DIVISION CHIEF
DATE
FILE
SHEET 102 OF 173

p:\60570\civil\plans\pGR_P007_60570.dgn
Tuesday, July 28, 2015 AT 04:31 PM
$PENTBL$
$PLTDRV$

REG	STATE	PROJECT	SHEET NO.	TOTAL SHEETS
3	D.C.	FAP No. STP-8888(480)	103	173

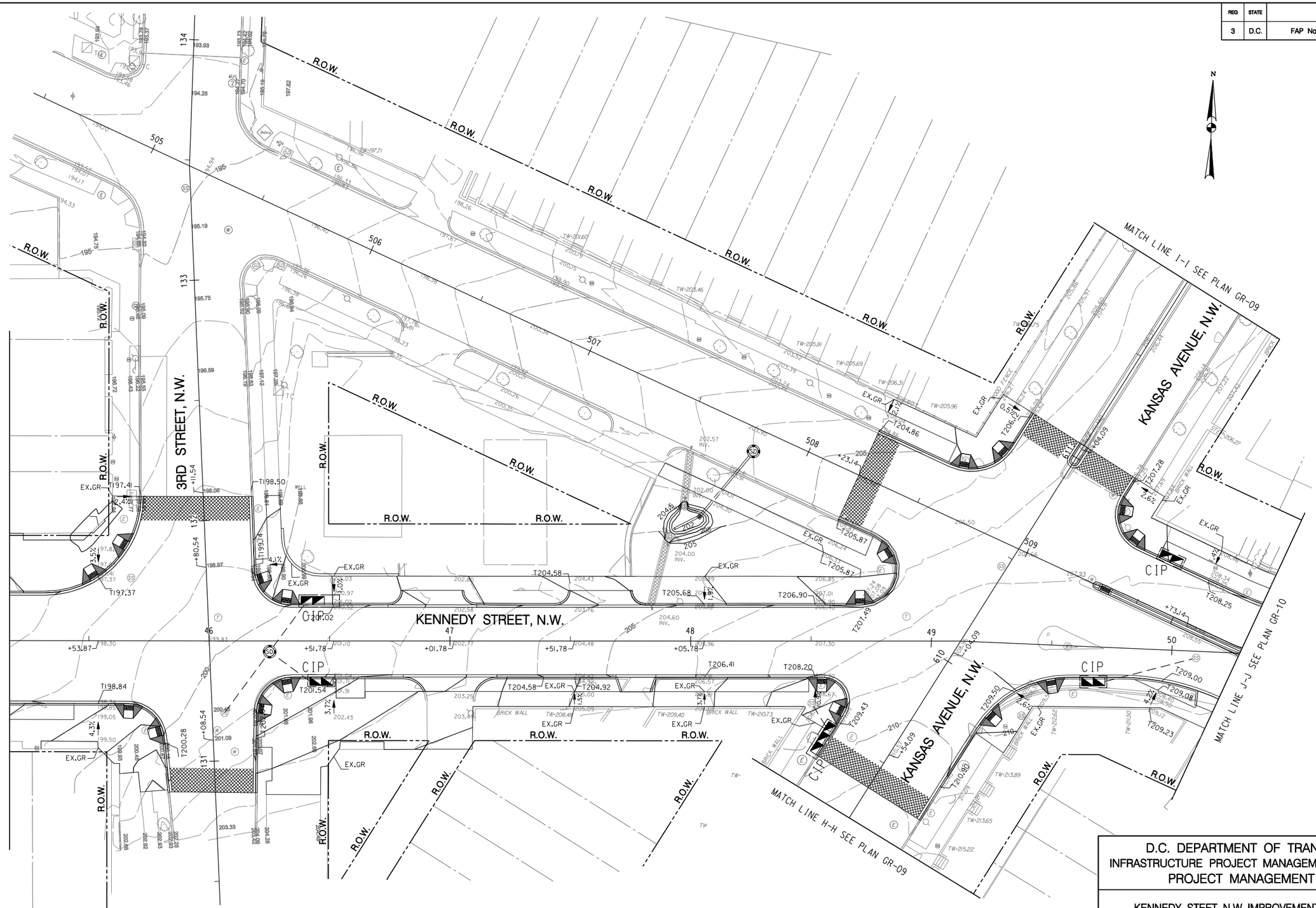

GRAPHIC SCALE

20 10 0 20 40

1" = 20'-0" HORIZ.

Precision Systems, Inc.
Engineers, Planners and Architects
WASHINGTON, D.C.

NO	DESCRIPTION	NAME	DATE

REVISIONS

GR-08

D.C. DEPARTMENT OF TRANSPORTATION
INFRASTRUCTURE PROJECT MANAGEMENT ADMINISTRATION
PROJECT MANAGEMENT DIVISION

KENNEDY STEET, N.W. IMPROVEMENT
FROM GEORGIA AVENUE TO NORTH CAPITOL STREET

PROJECT ENG. WZ
DESIGNED BY AYY
CHECKED BY MYH
DRAWN BY WZ/YZ
PROJECT MGR. AYY

GRADING
EROSION AND SEDIMENT CONTROL
PLAN – 8

DIVISION CHIEF
DATE
FILE
SHEET 103 OF 173

p:\60570\civil\plans\p6R_P008_60570.dgn $PENTBL$ $PLTDRV$
Tuesday, July 28, 2015 AT 04:32 PM

REG	STATE	PROJECT	SHEET NO.	TOTAL SHEETS
3	D.C.	FAP No. STP-8888(480)	104	173

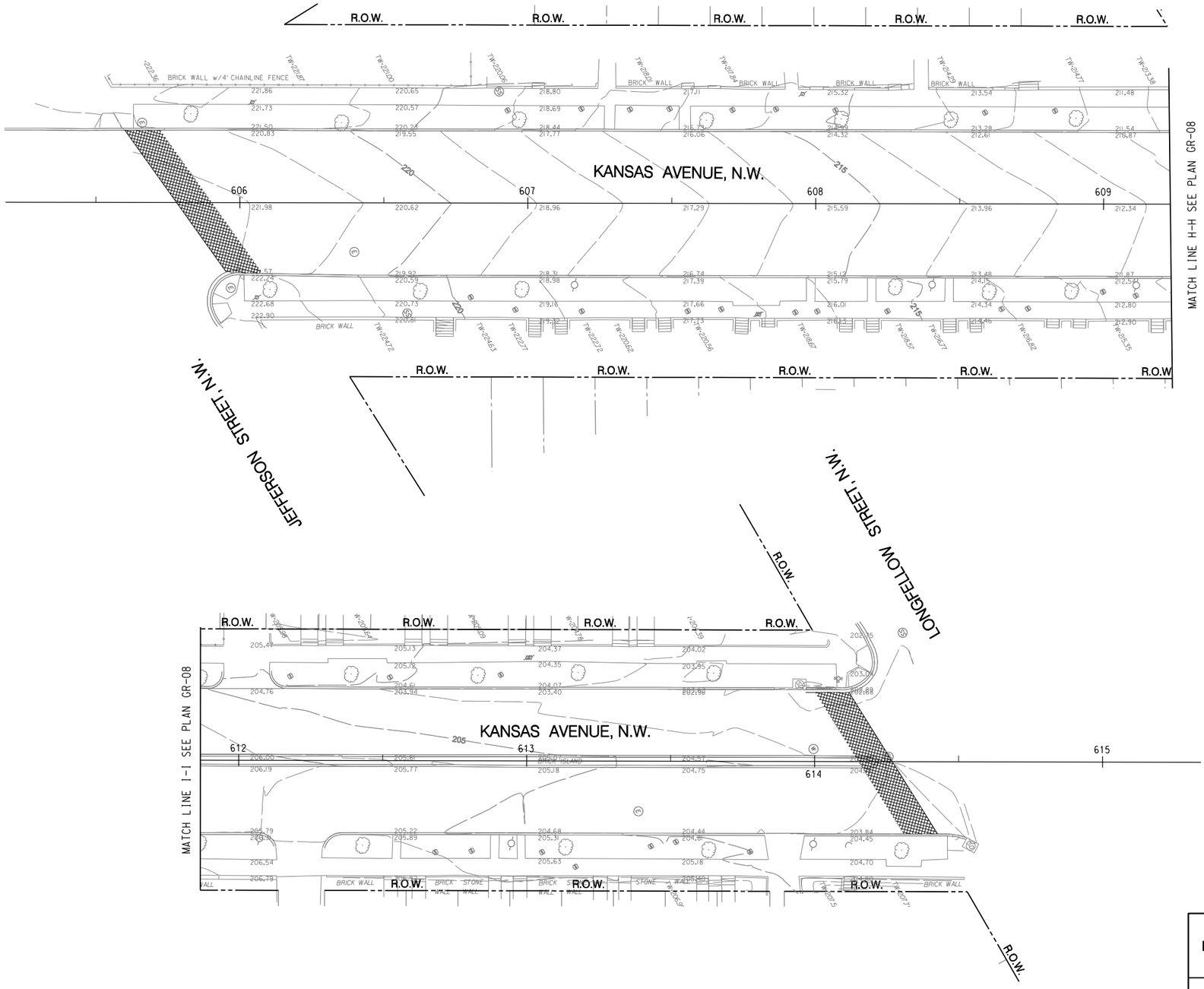

GRAPHIC SCALE

20 10 0 20 40

1" = 20'-0" HORIZ.

Precision Systems, Inc.
Engineers, Planners and Architects
WASHINGTON, D.C.

NO.	DESCRIPTION	NAME	DATE

REVISIONS

GR-09

D.C. DEPARTMENT OF TRANSPORTATION
INFRASTRUCTURE PROJECT MANAGEMENT ADMINISTRATION
PROJECT MANAGEMENT DIVISION

KENNEDY STEET, N.W. IMPROVEMENT
FROM GEORGIA AVENUE TO NORTH CAPITOL STREET

PROJECT ENG. WZ
DESIGNED BY AYY
CHECKED BY MYH
DRAWN BY WZ/YZ
PROJECT MGR. AYY

GRADING
EROSION AND SEDIMENT CONTROL
PLAN – 9

DIVISION CHIEF
DATE
FILE
SHEET 104 OF 173

p:\60570\civil\plans\pGR_P009_60570.dgn
Tuesday, July 28, 2015 AT 04:32 PM
$PENTBLS$
$PLTDRVS$

REG	STATE	PROJECT	SHEET NO.	TOTAL SHEETS
3	D.C.	FAP No. STP-8888(480)	105	173

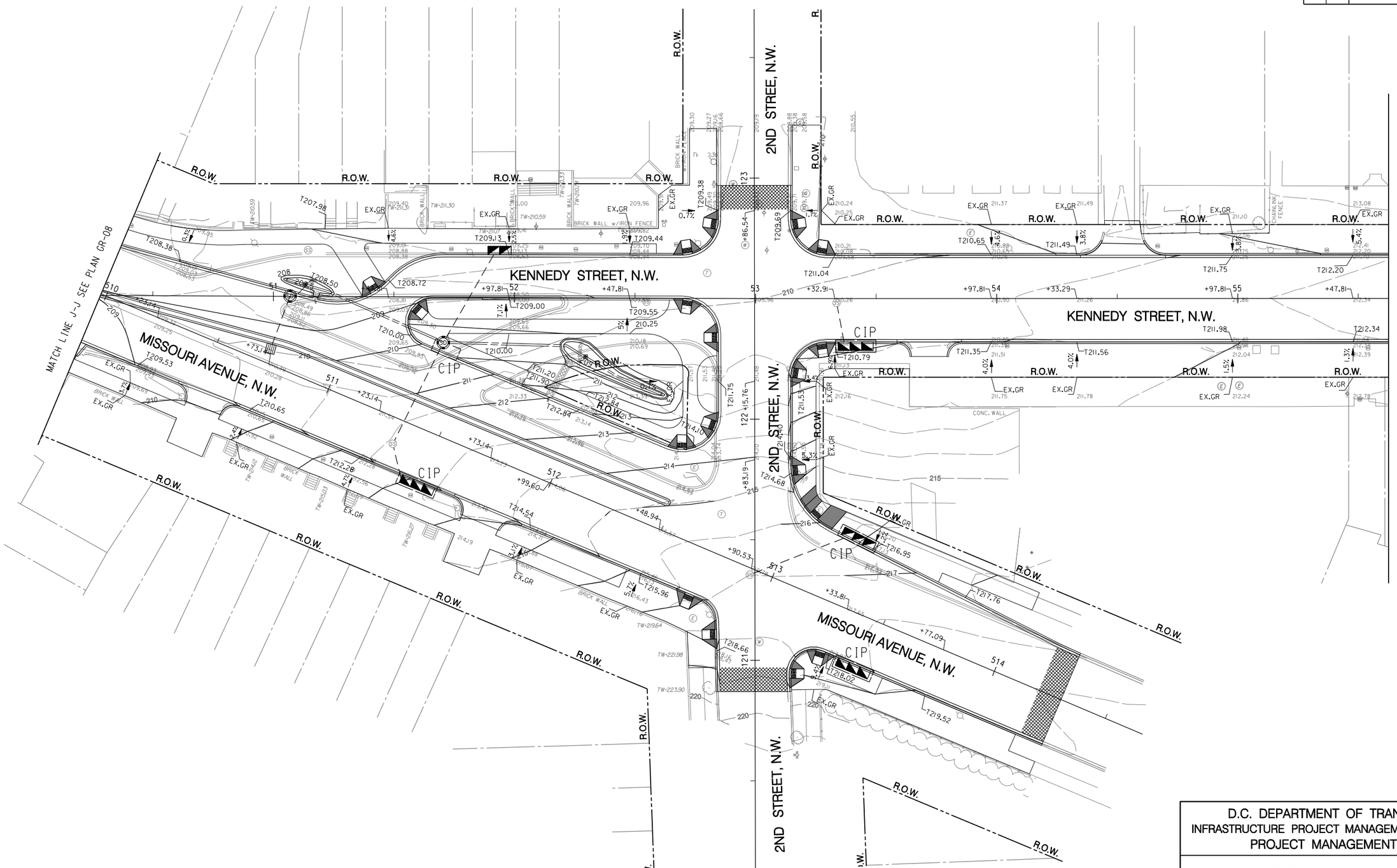

GRAPHIC SCALE

20 10 0 20 40

1" = 20'-0" HORIZ.

Precision Systems, Inc.
Engineers, Planners and Architects
WASHINGTON, D.C.

NO.	DESCRIPTION	NAME	DATE

REVISIONS

GR-10

D.C. DEPARTMENT OF TRANSPORTATION
INFRASTRUCTURE PROJECT MANAGEMENT ADMINISTRATION
PROJECT MANAGEMENT DIVISION

KENNEDY STEET, N.W. IMPROVEMENT
FROM GEORGIA AVENUE TO NORTH CAPITOL STREET

PROJECT ENG. WZ
DESIGNED BY AYY
CHECKED BY MYH
DRAWN BY WZ/YZ
PROJECT MGR. AYY

GRADING
EROSION AND SEDIMENT CONTROL
PLAN – 10

DIVISION CHIEF
DATE
FILE
SHEET 105 OF 173

p:\60570\civil\plans\pGR_P010_60570.dgn
Tuesday, July 28, 2015 AT 04:32 PM
$PLTDRVS$ $PENTBLS$

REG	STATE	PROJECT	SHEET NO.	TOTAL SHEETS
3	D.C.	FAP No. STP-8888(480)	106	173

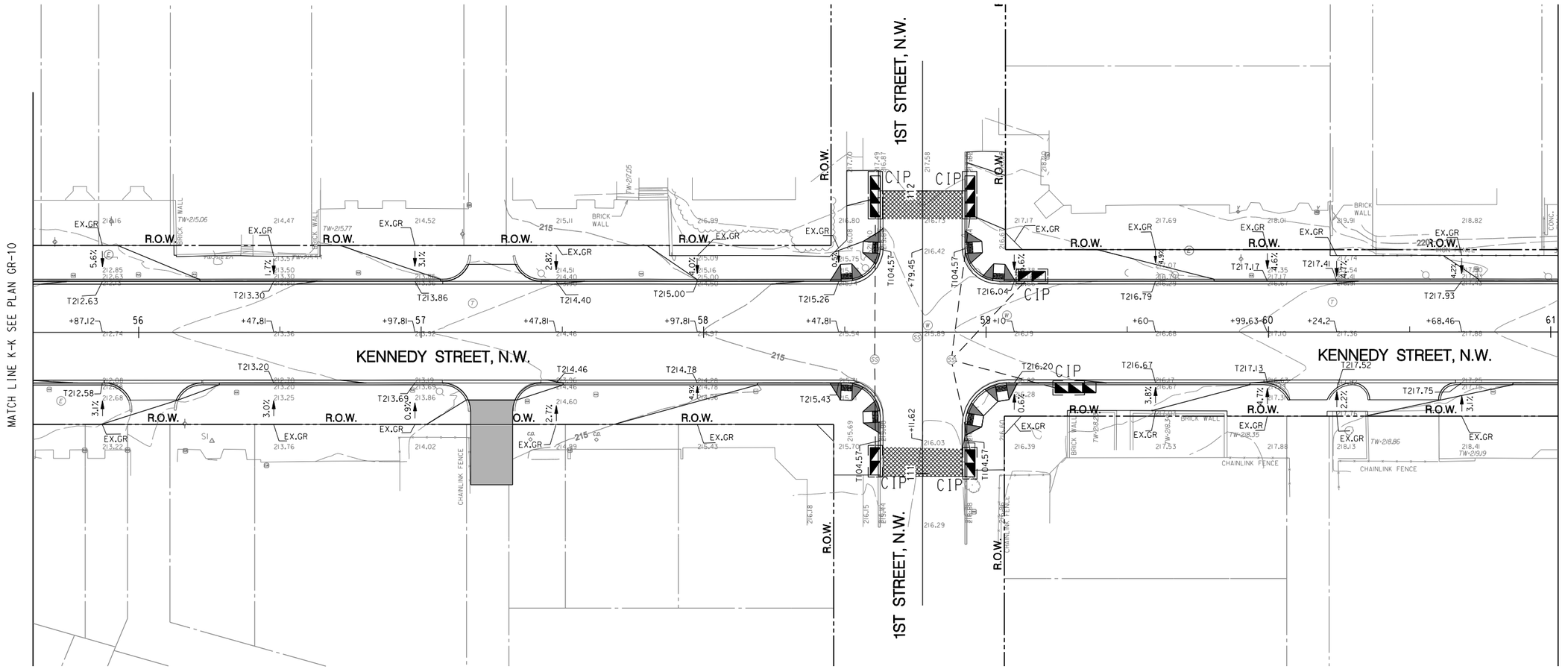

GRAPHIC SCALE

20 10 0 20 40

1" = 20'-0" HORIZ.

Precision Systems, Inc.
Engineers, Planners and Architects
WASHINGTON, D.C.

NO.	DESCRIPTION	NAME	DATE
	REVISIONS		

GR-11

D.C. DEPARTMENT OF TRANSPORTATION
INFRASTRUCTURE PROJECT MANAGEMENT ADMINISTRATION
PROJECT MANAGEMENT DIVISION

KENNEDY STEET, N.W. IMPROVEMENT
FROM GEORGIA AVENUE TO NORTH CAPITOL STREET

PROJECT ENG. WZ
DESIGNED BY AYY
CHECKED BY MYH
DRAWN BY WZ/YZ
PROJECT MGR. AYY

GRADING
EROSION AND SEDIMENT CONTROL
PLAN – 11

DIVISION CHIEF
DATE
FILE
SHEET 106 OF 173

p:\60570\civil\plans\pGR_P01_60570.dgn
Tuesday, July 28, 2015 AT 04:33 PM
$PENTBLS$
$PLTDRVS$

REG	STATE	PROJECT	SHEET NO.	TOTAL SHEETS
3	D.C.	FAP No. STP-8888(480)	107	173

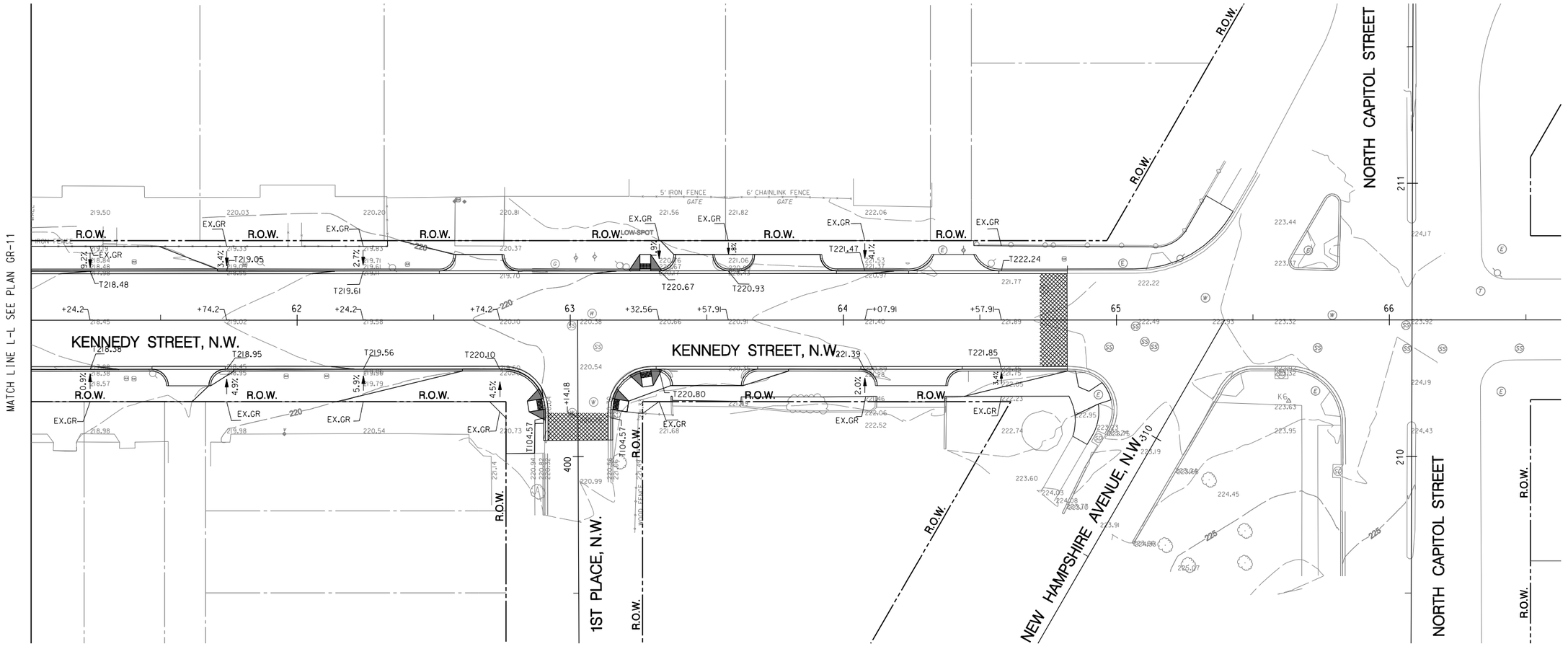

GRAPHIC SCALE

20 10 0 20 40

1" = 20'-0" HORIZ.

Precision Systems, Inc.
Engineers, Planners and Architects
WASHINGTON, D.C.

NO.	DESCRIPTION	NAME	DATE

REVISIONS

GR-12

D.C. DEPARTMENT OF TRANSPORTATION
INFRASTRUCTURE PROJECT MANAGEMENT ADMINISTRATION
PROJECT MANAGEMENT DIVISION

KENNEDY STEET, N.W. IMPROVEMENT
FROM GEORGIA AVENUE TO NORTH CAPITOL STREET

PROJECT ENG. WZ
DESIGNED BY AYY
CHECKED BY MYH
DRAWN BY WZ/YZ
PROJECT MGR. AYY

GRADING
EROSION AND SEDIMENT CONTROL
PLAN – 12

DIVISION CHIEF
DATE
FILE
SHEET 107 OF 173

p:\60570\civil\plans\pGR_P012_60570.dgn
Tuesday, July 28, 2015 AT 04:33 PM
$PENTBLS$
$PLTDRVS$

REG	STATE	PROJECT	SHEET NO.	TOTAL SHEETS
3	D.C.	FAP No. STP-8888(480)	108	173

GENERAL NOTES

1. ALL SEDIMENT AND EROSION CONTROL METHODS SHALL BE INSTALLED BEFORE THE START OF ANY EXCAVATION AND/OR CONSTRUCTION AS PER STANDARDS AND SPECIFICATIONS FOR SOIL EROSION AND SEDIMENT CONTROL FOR THE DISTRICT OF COLUMBIA. IF AN ON-SITE INSPECTION REVEALS FURTHER EROSION CONTROL MEASURES ARE NECESSARY THE SAME SHALL BE PROVIDED.
2. ALL DEBRIS SHALL BE REMOVED FROM THE SITE
3. ALLEY AND/OR STREETS SHALL BE SWEPT CLEAN AT ALL TIMES DURING EXCAVATION AND CONSTRUCTION.
4. ALL CATCH BASINS AND AREA DRAINS SHALL BE PROTECTED DURING EXCAVATION AND CONSTRUCTION.
5. IF ANY CATCH BASIN OR DRAIN BECOMES CLOGGED AS A RESULT OF EXCAVATION AND CONSTRUCTION, THE CONTRACTOR SHALL BE RESPONSIBLE FOR ITS CLEANING.
6. REMOVAL OF EXISTING BASIN INLET PROTECTION AND TRANSITION TO PROPOSED BASIN INLET PROTECTION WILL NOT TAKE PLACE UNTIL PRPOSED BASIN SYSTEM IS INSTALLED AND OPERATIONAL.
7. WHEN A SEDIMENT TRAP/TANK HAS REACHED 67% CAPACITY, CLEAN OUT SAME AS REQUIRED.
8. ANY STOCKPILING, REGARDLESS OF LOCATION ON THE SITE SHALL BE STABILIZED WHITHIN 20 DAYS AFTER ITS ESTABLISHMENT AND FOR THE DURATION OF THE PROJECT.
9. AFTER RAZE OR DEMOLITION, THERE IS THE NEED FOR GROUNDCOVER TO PREVENT EROSION AND SEDIMENT RUNOFF FROM OCCURRING, SUCH AS SEED, SOD, PAVE, BRICKBAT OR MULCH, ETC., SHALL BE PROVIDED.
10. NO STAGE OF CONSTRUCTION WILL BE COMPLETE AND FREE OF SEDIMENT AND EROSION CONTROL MEASURES UNTIL ALL PROPOSED GROUNDCOVER IS IN PLACE.

EROSION AND SEDIMENT CONTROL MEASURES AND SEQUENCE

1. ALL EROSION AND SEDIMENT CONTROL MEASURES SHALL BE PLACED PRIOR TO OR AS THE FIRST STEP IN GRADING.
2. PROVIDE TEMPORARY STONE CONSTRUCTION ENTRANCE WHERE SHOWN PROVIDE WATER SOURCE AND HOSE TO CLEAN ALL EQUIPMENT LEAVING SITE.
3. INSTALL SILT FENCE AROUND PERIMETER OF SITE.
4. NO DISTURBED AREA WILL BE DENUDED FOR MORE THAN 7 CALENDAR DAYS. INSTALL THE NECESSARY TEMPORARY OR PERMANENT VEGETATIVE STABILIZATION MEASURES TO ACHIEVE ADEQUATE EROSION AND SEDIMENT CONTROL.
5. ALL CONSTRUCTION TO BE INSPECTED DAILY BY THE CONTRACTOR, AND ANY DAMAGED SILTATION OR EROSION CONTROL DEVICES OR MEASURES WILL BE REPAIRED AT THE CLOSE OF THE DAY.
6. ALL SILT FENCE TO BE MAINTAINED IN WORKING CONDITION.
7. STABILIZED CONSTRUCTION ENTRANCES TO BE PERIODICALLY SUPPLEMENTED WITH ADDITIONAL STONE AS NEEDED.
8. CONTROLS WILL BE REMOVED AFTER THEIR CONTRIBUTION BASINS HAVE BEEN PERMANENTLY STABILIZED.

STANDARDS AND SPECIFICATIONS FOR DUST CONTROL

1. THE CONTRACTOR SHALL CONDUCT OPERATIONS AND MAINTAIN THE PROJECT SITE AS TO MINIMIZE THE CREATION AND DISPERSION OF DUST. DUST CONTROL SHALL BE USED THROUGHOUT THE WORK AT THE SITE.
2. THE CONTRACTOR MUST PROVIDE CLEAN WATER, FREE OF SALT, OIL AND OTHER DELETERIOUS MATERIAL TO BE USED FOR ON-SITE DUST CONTROL.
3. THE CONTRACTOR SHALL SUPPLY WATER SPRAYING EQUIPMENT CAPABLE OF ACCESSING ALL WORK AREAS.
4. THE CONTRACTOR SHALL IMPLEMENT STRICT DUST CONTROL MEASURES DURING ACTIVE CONSTRUCTION PERIODS ON-SITE. THESE CONTROL MEASURES WILL GENERALLY CONSIST OF WATER APPLICATIONS THAT SHALL BE APPLIED A MINIMUM OF ONCE PER DAY DURING DRY WEATHER OR MORE OFTEN AS REQUIRED TO PREVENT DUST EMMISSIONS.
5. FOR WATER APPLICATION TO UNDISTURBED SOIL SURFACES, THE CONTRACTOR SHALL:
   A. APPLY WATER WITH EQUIPMENT CONSISTING OF TANK, SPRAY BAR, PUMP WITH DISCHARGE PRESSURE GAUGE;
   B. ARRANGE SPRAY BAR HEIGHT, NOZZLE SPACING AND SPRAY PATTERN TO PROVIDE COMPLETE COVERAGE OF GROUND WITH WATER;
   C. DISPERSE WATER THROUGH NOZZLES ON SPRAY BAR A 20 PSI(137.8 K PA) MINIMUM. KEEP AREAS DAMP WITHOUT CREATING NUISANCE CONDITIONS SUCH AS PONDING;
6. FOR WATER APPLICATION TO SOIL SURFACES DURING DEMOLITION AND/OR EXCAVATION. THE CONTRACTOR SHALL:
   A. APPLY WATER WITH EQUIPMENT CONSISTING OF A TANK, PUMP WITH DISCHARGE GAUGE, HOSES AND MIST NOZZLES;
   B. LOCATE TANK AND SPRAYING EQUIPMENT SO THAT THE ENTIRE EXCAVATION AREA CAN BE MISTED WITHOUT INTERFERING WITH DEMOLITION AND/OR EXCAVATION EQUIPMENT OR OPERATIONS. KEEP AREAS DAMP WITHOUT CREATING NUISANCE CONDITIONS SUCH AS PONDING;
   C. APPLY WATER SPRAY IN A MANNER TO PREVENT MOVEMENT OF SPRAY BEYOND THE SITE BOUNDARIES.

PROJECT NARRATIVE

WITHIN THE PROJECT LIMIT, ALL CURBS AND GUTTERS WILL BE REMOVED AND REPLACED WITH GRANITE CURBS AND BRICK GUTTERS. ALL SIDEWALKS WILL BE REMOVED AND REPLACED WITH PCC PAVING, BRICK PAVING, AND CONCRETE PAVERS. TREES WILL BE PLANTED. ALL STREETLIGHTS WILL BE UPGRADED TO CONFORM WITH DDOT STANDARDS. ALL SIGNALS WILL BE REPLACED. STREETS WILL BE RESURFACED. THIS IS PRIMARILY A LANDSCAPE PROJECT. IT WILL HAVE A POSITIVE IMPACT ON THE ENVIRONMENT.

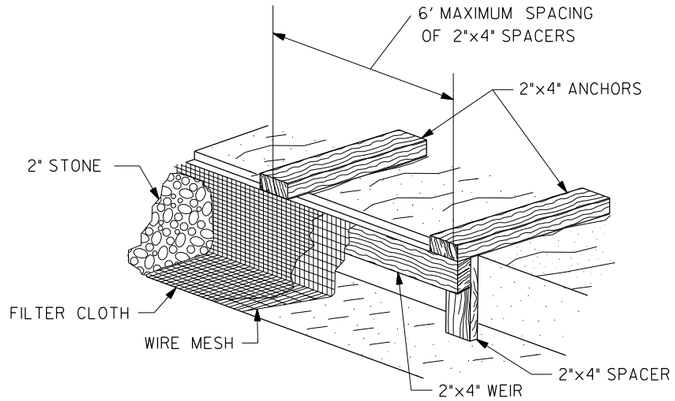

MAX. DRAINAGE AREA = 1/4 ACRE

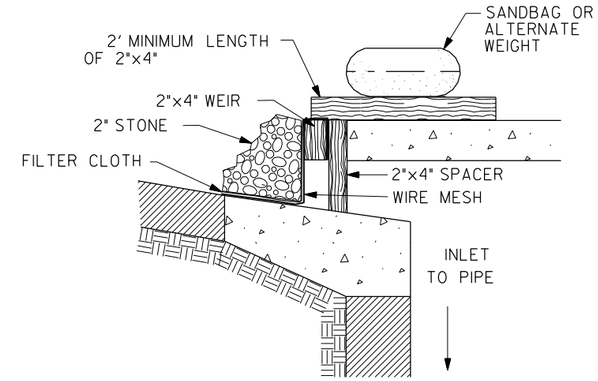

CURB INLET PROTECTION DETAIL

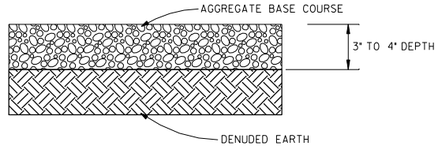

AGGREGATE BASE COURSE GROUND COVER

STREET SWEEPING

1. STREETS SHALL BE INSPECTED DAILY. ANY DROPPED SOIL, DUST AND/OR DEBRIS SHALL BE REMOVED.
2. VACUUM TYPE STREET CLEANER SHALL BE USED TO EFFECTIVELY REMOVE TOTAL DUST AND DIRT ON PAVED SURFACES.
3. ROADS SHALL BE SWEPT ON A REGULAR BASS DURING ALL ON AND OFF SITE HAULING OPERATIONS ALONG HAUL ROUTES.

TABLE OF ESTIMATE EARTHWORK QUANTITIES

DISTURBED AREA (AC.)	COMMON • EXCAVATION (C.Y.)	EMBANKMENT • FILL (C.Y.)
3.42	6209	3438

• ESTIMATED VOLUME
THESE VOLUMES ARE PROVIDED FOR THE EROSION AND SEDIMENT CONTROL PERMITTING PURPOSES ONLY. THE CONTRACTOR SHALL BE RESPONSIBLE FOR THE ACTUAL VOLUME OF EXCAVATION AND EMBANKMENT REQUIRED TO COMPLETE THE WORK.

NOT TO SCALE

ES-01

Precision Systems, Inc.
Engineers, Planners and Architects
WASHINGTON, D.C.

NO	DESCRIPTION	NAME	DATE

REVISIONS

D.C. DEPARTMENT OF TRANSPORTATION
INFRASTRUCTURE PROJECT MANAGEMENT ADMINISTRATION
PROJECT MANAGEMENT DIVISION

KENNEDY STEET, N.W. IMPROVEMENT
FROM GEORGIA AVENUE TO NORTH CAPITOL STREET

EROSION AND SEDIMENT CONTROL DETAILS

PROJECT ENG. WZ
DESIGNED BY AYY
CHECKED BY MYH
DRAWN BY WZ/YZ
PROJECT MGR. AYY

DIVISION CHIEF
DATE
FILE
SHEET 108 OF 173

$PENTBLS$
$PLTDRVS$
p:\60570\civil\plans\ES_D100_60570.dgn
Tuesday, July 28, 2015 AT 04:34 PM

REG	STATE	PROJECT	SHEET NO.	TOTAL SHEETS
3	D.C.	FAP No. STP-8888(480)	109	173

DDOE SOIL EROSION AND SEDIMENT CONTROL PLAN GENERAL NOTES

1. Following initial land disturbance or re-disturbance, permanent or interim stabilization must be completed within seven (7) calendar days for the surfaces of all perimeter controls, dikes, swales, ditches, perimeter slopes, and slopes greater than three (3) horizontal to one (1) vertical (3:1); and fourteen (14) days for all other disturbed or graded areas on the project site. These requirements do not apply to areas shown on the plan that are used for material storage other than stockpiling, or for those areas on the plan where actual construction activities are being performed. Maintenance shall be performed as necessary so that stabilized areas continuously meet the appropriate requirements of the District of Columbia Standards and Specifications for Soil Erosion and Sediment Control (ESC). [21 DCMR § 542.9 (o)]
2. ESC measures shall be in place before and during land disturbance. [21 DCMR § 543.6]
3. Contact DDOE Inspection (202) 535-2977 to schedule a preconstruction meeting at least three (3) business days before the commencement of a land-disturbing activity. [21 DCMR § 503.7 (a)]
4. A copy of the approved plan set will be maintained at the construction site from the date that construction activities begin to the date of final stabilization and will be available for DDOE inspectors. [21 DCMR § 542.15]
5. ESC measures shall be in place to stabilize an exposed area as soon as practicable after construction activity has temporarily or permanently ceased but no later than fourteen (14) days following cessation, except that temporary or permanent stabilization shall be in place at the end of each day of underground utility work that is not contained within a larger development site. [21 DCMR § 543.7]
6. Stockpiled material being actively used during a phase of construction shall be protected against erosion by establishing and maintaining perimeter controls around the stockpile. [21 DCMR § 543.16 (a)]
7. Stockpiled material not being actively used or added to shall be stabilized with mulch, temporary vegetation, hydro-seed or plastic within fifteen (15) calendar days after its last use or addition. [21 DCMR § 543.16 (b)]
8. Protect best management practices from sedimentation and other damage during construction for proper post construction operation. [21 DCMR § 543.5]
9. Request a DDOE **inspector's** approval after the installation of perimeter erosion and sediment controls, but before proceeding with any other earth disturbance or grading. [21 DCMR § 542.12 (a)]
10. Request a DDOE **inspector's** approval after final stabilization of the site and before the removal of erosion and sediment controls. [21 DCMR § 542.12 (b)]
11. Final stabilization means that all land-disturbing activities at the site have been completed and either of the following two criteria have been met: (1) a uniform (for example, evenly distributed, without large bare areas) perennial vegetative cover with a density of seventy percent (70%) of the native background vegetative cover for the area has been established on all unpaved areas and areas not covered by permanent structures, or (2) equivalent permanent stabilization measures have been employed (such as the use of riprap, gabions, or geotextiles). [21 DCMR § 542.12 (b.1, b.2)]
12. Follow the requirements of the United States Environmental Protection Agency approved Stormwater Pollution Prevention Plan (SWPPP) and maintain a legible copy of this SWPPP on site. [21 DCMR § 543.10 (b)]
13. Post a sign that notifies the public to contact DDOE in the event of erosion or other pollution. The sign will be placed at each entrance to the site or as directed by the DDOE inspector. Each sign will be no less than 18 x 24 inches in size and made of materials that will withstand weather for the duration of the project. Lettering will be at least 1 inch in height and easily readable by the public from a distance of twelve feet (12 ft). The sign must direct the public, **in substantially the following form: "To Report Erosion, Runoff, or Stormwater Pollution" and** will **provide the construction site address, DDOE's telephone number (202-535-2977), DDOE's e**-mail address (IEB.scheduling@dc.gov), and the 311 mobile app heading (**"Construction-Erosion Runoff"**). [21 DCMR § 543.22]

If a site disturbs 5,000 square feet of land or greater, the ESC plan must contain the following statement:

14. A *Responsible Person* must be present or available while the site is in a land-disturbing phase. The *Responsible Person* is charged with being available to (a) inspect the site and its ESC measures at least once biweekly and after a rainfall event to identify and remedy each potential or actual erosion problem, (b) respond to each potential or actual erosion problem identified by construction personnel, and (c) speak on site with DDOE to remedy each potential or actual erosion problem. A *Responsible Person* shall be (a) licensed in the District of Columbia as a civil or geotechnical engineer, a land surveyor, or architect; or (b) certified through a training program that DDOE approves, including a course on erosion control provided by another jurisdiction or professional association. During construction, the *Responsible Person* shall keep on site proof of professional licensing or of successful completion of a DDOE-approved training program. [21 DCMR § 547]

p:\60570\civil\plans\pES_N100_60570.dgn
Tuesday, July 28, 2015 AT 04:35 PM
$PLTDRVS$
$PENTBLS$

Precision Systems, Inc.
Engineers, Planners and Architects
WASHINGTON, D.C.

NO	DESCRIPTION	NAME	DATE

REVISIONS

ES-02

D.C. DEPARTMENT OF TRANSPORTATION
INFRASTRUCTURE PROJECT MANAGEMENT ADMINISTRATION
PROJECT MANAGEMENT DIVISION

KENNEDY STEET, N.W. IMPROVEMENT
FROM GEORGIA AVENUE TO NORTH CAPITOL STREET

PROJECT ENG. WZ
DESIGNED BY AYY
CHECKED BY MYH
DRAWN BY WZ/YZ
PROJECT MGR. AYY

DDOE EROSION AND SEDIMENT CONTROL GENERAL NOTES

DIVISION CHIEF
DATE
FILE
SHEET 109 OF 173

REG	STATE	PROJECT	SHEET NO.	TOTAL SHEETS
3	D.C.	FAP No. STP-8888(480)	110	173

Page 1 of 1

RECORD OF SOIL / ROCK EXPLORATION

Contracted With: Precision System, Inc. — Boring #: SWM-1
Project Name: Geotechnical Investigation at Kennedy Street, NW — Job #: 15-00006
Location: Kennedy Street, NW, Washington, DC.

SAMPLER

Datum: — Hammer Wt.: 140 lb — Hole Diameter: 8 in — Foreman: W. Massey
Surf. Elev.: — Hammer Drop: 30 in — Rock Core Dia.: N/A — Inspector: D.Abebe
Date Started: 3/25/15 — Spoon Size: 2 in — Boring Method: HSA — Date Completed: 3/25/15

ELEV. (ft)	SOIL DESCRIPTION Color, Moisture, Density, Plasticity, Size Proportions	STRA DEPTH (ft)	SOIL SYMBOL	DEPTH SCALE	SAMPLE Cond	Blows/6"	No.	Type	Rec (in)	BORING & SAMPLE NOTES
	7" of **TOPSOIL**	0.6								1. No water encountered
	Dark brown, moist, loose, silty **SAND, (FILL)**	2.0			I/D	1-2-4-6	1	DS	14	2. Drill Rig used: Acker AD-II
	Brown, moist, loose, silty **SAND**				I	5-5-5-5	2	DS	16	3. Bag sample collected from 0' to 4.0'.
					I	3-3-4-6	3	DS	20	5. Test boring backfilled with excess auger cuttings upon completion.
	Bottom of Boring at 6.0 ft	6.0								

SAMPLER TYPE
DS - DRIVEN SPLIT SPOON
PT - PRESSED SHELBY TUBE
CA - CONTINUOUS FLIGHT AUGER
RC - ROCK CORE

SAMPLE CONDITIONS
D - DISINTEGRATED
I - INTACT
U - UNDISTURBED
L - LOST

GROUNDWATER DEPTH
AT COMPLETION dry ft
AFTER ____ HRS. ____ ft
AFTER 24 HRS. ____ ft
CAVED AT 4.2 ft

BORING METHOD
HSA - HOLLOW STEM AUGERS
CFA - CONTINUOUS FLIGHT AUGERS
DC - DRIVING CASING
MD - MUD DRILLING

STANDARD PENETRATION TEST DRIVING 2" OD SAMPLER 1' WITH 140# HAMMER FALLING 30": COUNT MADE AT 6" INTERVALS

Page 1 of 1

RECORD OF SOIL / ROCK EXPLORATION

Contracted With: Precision System, Inc. — Boring #: TB-1
Project Name: Geotechnical Investigation at Kennedy Street, NW — Job #: 15-00006
Location: Kennedy Street, NW, Washington, DC.

SAMPLER

Datum: — Hammer Wt.: 140 lb — Hole Diameter: 8 in — Foreman: W. Massey
Surf. Elev.: — Hammer Drop: 30 in — Rock Core Dia.: 4 in — Inspector: D.Abebe
Date Started: 3/25/15 — Spoon Size: 2 in — Boring Method: Core/HSA — Date Completed: 3/25/15

ELEV. (ft)	SOIL DESCRIPTION Color, Moisture, Density, Plasticity, Size Proportions	STRA DEPTH (ft)	SOIL SYMBOL	DEPTH SCALE	SAMPLE Cond	Blows/6"	No.	Type	Rec (in)	BORING & SAMPLE NOTES
	2.0" of **HOT MIX ASPHALT CONCRETE (HMAC)**	0.2								1. No water encountered
	8.5" of **PORTLAND CEMENT CONCRETE**	0.9								2. Drill Rig used: Acker AD-II
	Brown, moist, clayey **SAND**	3.8								3. Pavement core collected, zip lock sample collected for subgrade.
	Bottom of Boring at 3.8 ft									4. DCP performed.
										5. Test boring backfilled with quickcrete.

SAMPLER TYPE
DS - DRIVEN SPLIT SPOON
PT - PRESSED SHELBY TUBE
CA - CONTINUOUS FLIGHT AUGER
RC - ROCK CORE

SAMPLE CONDITIONS
D - DISINTEGRATED
I - INTACT
U - UNDISTURBED
L - LOST

GROUNDWATER DEPTH
AT COMPLETION dry ft
AFTER ____ HRS. ____ ft
AFTER 24 HRS. ____ ft
CAVED AT ____ ft

BORING METHOD
HSA - HOLLOW STEM AUGERS
CFA - CONTINUOUS FLIGHT AUGERS
DC - DRIVING CASING
MD - MUD DRILLING

STANDARD PENETRATION TEST DRIVING 2" OD SAMPLER 1' WITH 140# HAMMER FALLING 30": COUNT MADE AT 6" INTERVALS

PC-01

Precision Systems, Inc.
Engineers, Planners and Architects
WASHINGTON, D.C.

NO	DESCRIPTION	NAME	DATE

REVISIONS

D.C. DEPARTMENT OF TRANSPORTATION
INFRASTRUCTURE PROJECT MANAGEMENT ADMINISTRATION
PROJECT MANAGEMENT DIVISION

KENNEDY STEET, N.W. IMPROVEMENT
FROM GEORGIA AVENUE TO NORTH CAPITOL STREET

PROJECT ENG. WZ
DESIGNED BY AYY
CHECKED BY MYH
DRAWN BY WZ/YZ
PROJECT MGR. AYY

BORING LOGS – 1

DIVISION CHIEF
DATE
FILE
SHEET 110 OF 173

p:\60570\civil\plans\pPC_P001_60570.dgn
Tuesday, July 28, 2015 AT 04:36 PM
$PLTDRVS$ $PENTBLS$

REG	STATE	PROJECT	SHEET NO.	TOTAL SHEETS
3	D.C.	FAP No. STP-8888(480)	111	173

RECORD OF SOIL / ROCK EXPLORATION

Contracted With: Precision System, Inc. | Boring #: TB-2
Project Name: Geotechnical Investigation at Kennedy Street, NW | Job #: 15-00006
Location: Kennedy Street, NW, Washington, DC.

SAMPLER

Datum: — | Hammer Wt.: 140 lb | Hole Diameter: 8 in | Foreman: W. Massey
Surf. Elev.: — | Hammer Drop: 30 in | Rock Core Dia.: 4 in | Inspector: D.Abebe
Date Started: 3/25/15 | Spoon Size: 2 in | Boring Method: Core/HSA | Date Completed: 3/25/15

ELEV. (ft)	SOIL DESCRIPTION Color, Moisture, Density, Plasticity, Size Proportions	STRA DEPTH (ft)	SOIL SYMBOL	DEPTH SCALE	SAMPLE Cond	Blows/6"	No.	Type	Rec (in)	BORING & SAMPLE NOTES
	2.25" of **HOT MIX ASPHALT CONCRETE (HMAC)**	0.2								1. No water encountered
	6.75" of **PORTLAND CEMENT CONCRETE**	0.9								2. Drill Rig used: Acker AD-II
	Dark brown, moist, silty **SAND**, with gravel, **(FILL)**	3.9		5						3. Pavement core collected, zip lock sample collected for subgrade.
	Bottom of Boring at 3.9 ft			10						4. DCP performed.
				15						5. Test boring backfilled with quickcrete.
				20						

SAMPLER TYPE
DS - DRIVEN SPLIT SPOON
PT - PRESSED SHELBY TUBE
CA - CONTINUOUS FLIGHT AUGER
RC - ROCK CORE

SAMPLE CONDITIONS
D - DISINTEGRATED
I - INTACT
U - UNDISTURBED
L - LOST

GROUNDWATER DEPTH
AT COMPLETION dry ft
AFTER ____ HRS. ____ ft
AFTER 24 HRS. ____ ft
CAVED AT ____ ft

BORING METHOD
HSA - HOLLOW STEM AUGERS
CFA - CONTINUOUS FLIGHT AUGERS
DC - DRIVING CASING
MD - MUD DRILLING

STANDARD PENETRATION TEST DRIVING 2" OD SAMPLER 1' WITH 140# HAMMER FALLING 30": COUNT MADE AT 6" INTERVALS

Page 1 of 1

RECORD OF SOIL / ROCK EXPLORATION

Contracted With: Precision System, Inc. | Boring #: TB-3
Project Name: Geotechnical Investigation at Kennedy Street, NW | Job #: 15-00006
Location: Kennedy Street, NW, Washington, DC.

SAMPLER

Datum: — | Hammer Wt.: 140 lb | Hole Diameter: 8 in | Foreman: W. Massey
Surf. Elev.: — | Hammer Drop: 30 in | Rock Core Dia.: 4 in | Inspector: D.Abebe
Date Started: 3/25/15 | Spoon Size: 2 in | Boring Method: Core/HSA | Date Completed: 3/25/15

ELEV. (ft)	SOIL DESCRIPTION Color, Moisture, Density, Plasticity, Size Proportions	STRA DEPTH (ft)	SOIL SYMBOL	DEPTH SCALE	SAMPLE Cond	Blows/6"	No.	Type	Rec (in)	BORING & SAMPLE NOTES
	4" of **HOT MIX ASPHALT CONCRETE (HMAC)**	0.3								1. No water encountered
	8" of **PORTLAND CEMENT CONCRETE**	1.0								2. Drill Rig used: Acker AD-II
	Brown, moist, silty **SAND**, with gravel, **(FILL)**	4.0		5						3. Pavement core collected, zip lock sample collected for subgrade.
	Bottom of Boring at 4.0 ft			10						4. DCP performed.
				15						5. Test boring backfilled with quickcrete.
				20						

SAMPLER TYPE
DS - DRIVEN SPLIT SPOON
PT - PRESSED SHELBY TUBE
CA - CONTINUOUS FLIGHT AUGER
RC - ROCK CORE

SAMPLE CONDITIONS
D - DISINTEGRATED
I - INTACT
U - UNDISTURBED
L - LOST

GROUNDWATER DEPTH
AT COMPLETION dry ft
AFTER ____ HRS. ____ ft
AFTER 24 HRS. ____ ft
CAVED AT ____ ft

BORING METHOD
HSA - HOLLOW STEM AUGERS
CFA - CONTINUOUS FLIGHT AUGERS
DC - DRIVING CASING
MD - MUD DRILLING

STANDARD PENETRATION TEST DRIVING 2" OD SAMPLER 1' WITH 140# HAMMER FALLING 30": COUNT MADE AT 6" INTERVALS

PC-02

Precision Systems, Inc.
Engineers, Planners and Architects
WASHINGTON, D.C.

NO	DESCRIPTION	NAME	DATE

REVISIONS

D.C. DEPARTMENT OF TRANSPORTATION
INFRASTRUCTURE PROJECT MANAGEMENT ADMINISTRATION
PROJECT MANAGEMENT DIVISION

KENNEDY STEET, N.W. IMPROVEMENT
FROM GEORGIA AVENUE TO NORTH CAPITOL STREET

PROJECT ENG. WZ
DESIGNED BY AYY
CHECKED BY MYH
DRAWN BY WZ/YZ
PROJECT MGR. AYY

BORING LOGS – 2

DIVISION CHIEF
DATE
FILE
SHEET 111 OF 173

p:\60570\civil\plans\pPC_P002_60570.dgn
Tuesday, July 28, 2015 AT 04:37 PM
$PENTBLS$
$PLTDRVS$

REG	STATE	PROJECT	SHEET NO.	TOTAL SHEETS
3	D.C.	FAP No. STP-8888(480)	112	173

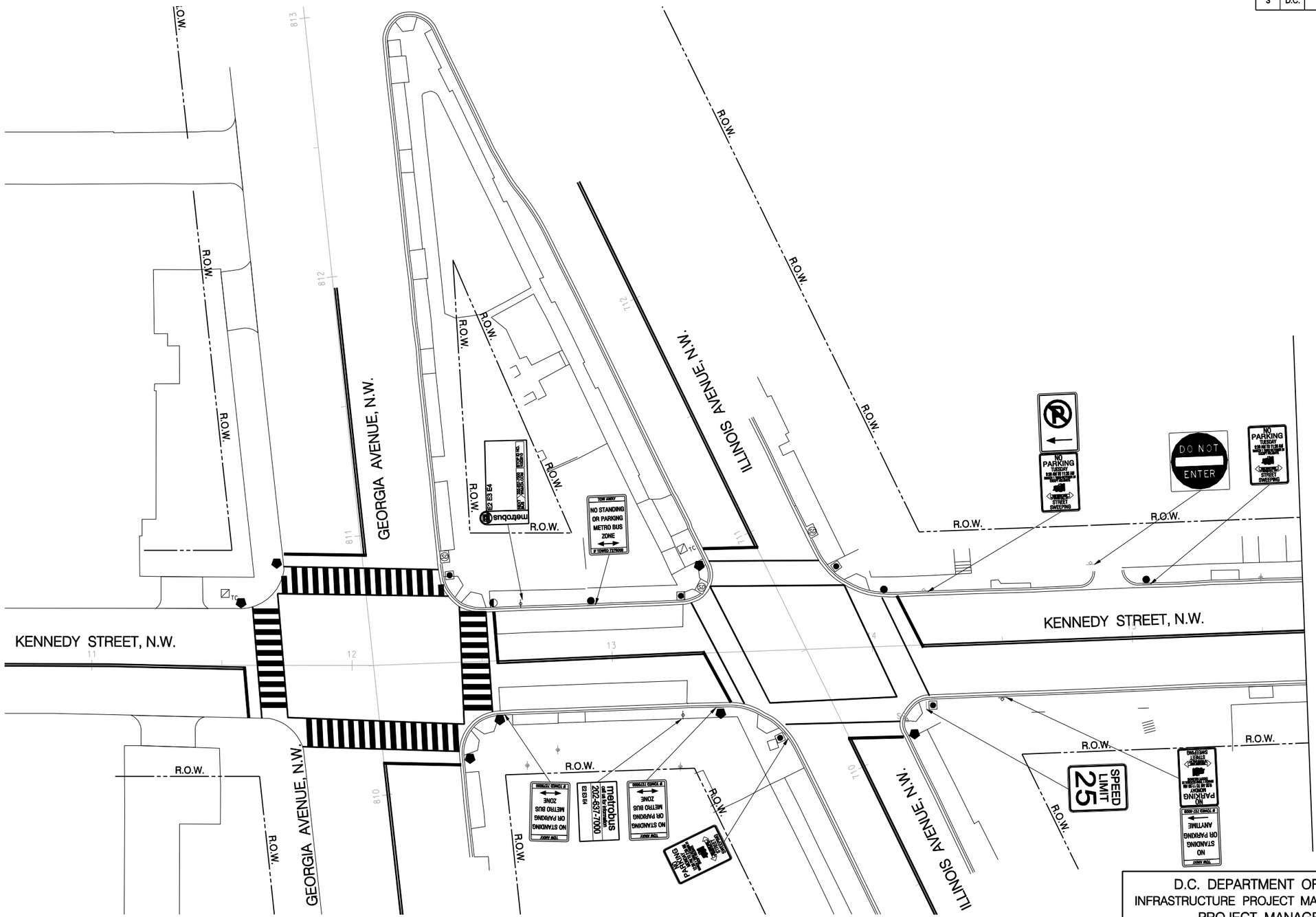

GRAPHIC SCALE

20 10 0 20 40

1" = 20'-0" HORIZ.

Precision Systems, Inc.
Engineers, Planners and Architects
WASHINGTON, D.C.

NO	DESCRIPTION	NAME	DATE

REVISIONS

SN-01

D.C. DEPARTMENT OF TRANSPORTATION
INFRASTRUCTURE PROJECT MANAGEMENT ADMINISTRATION
PROJECT MANAGEMENT DIVISION

KENNEDY STEET, N.W. IMPROVEMENT
FROM GEORGIA AVENUE TO NORTH CAPITOL STREET

PROJECT ENG. WZ
DESIGNED BY AYY
CHECKED BY MYH
DRAWN BY WZ/YZ
PROJECT MGR. AYY

EXISTING SIGNAGE AND
PAVEMENT MARKING – 1

DIVISION CHIEF
DATE
FILE
SHEET 112 OF 173

p:\60570\civil\plans\pSN_E001_60570.dgn
Tuesday, July 28, 2015 AT 04:37 PM
$PLTDRVS$
$PENTBLS$

REG	STATE	PROJECT	SHEET NO.	TOTAL SHEETS
3	D.C.	FAP No. STP-8888(480)	113	173

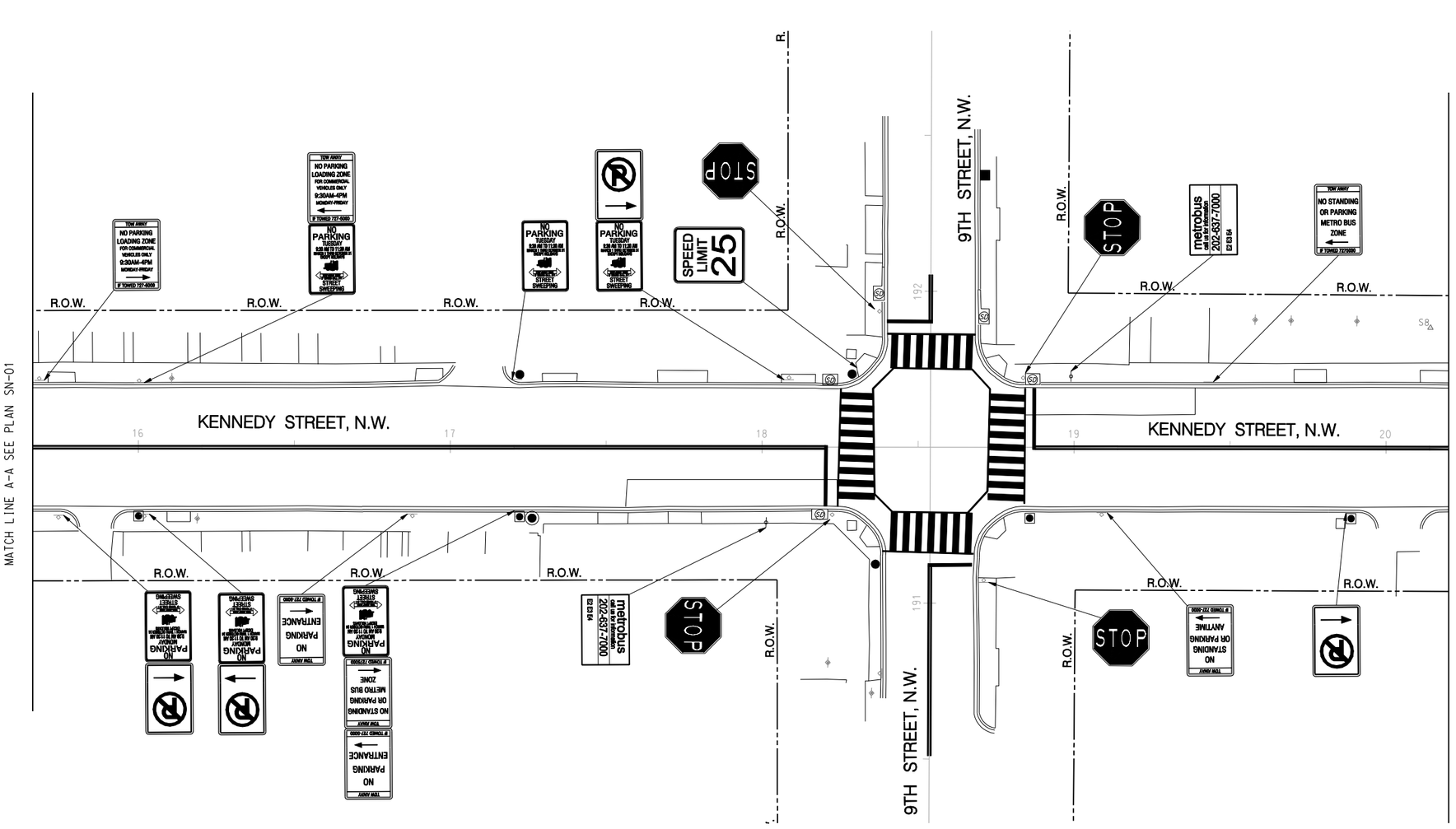

GRAPHIC SCALE

20 10 0 20 40

1" = 20'-0" HORIZ.

Precision Systems, Inc.
Engineers, Planners and Architects
WASHINGTON, D.C.

NO	DESCRIPTION	NAME	DATE

REVISIONS

SN-02

D.C. DEPARTMENT OF TRANSPORTATION
INFRASTRUCTURE PROJECT MANAGEMENT ADMINISTRATION
PROJECT MANAGEMENT DIVISION

KENNEDY STEET, N.W. IMPROVEMENT
FROM GEORGIA AVENUE TO NORTH CAPITOL STREET

PROJECT ENG. WZ
DESIGNED BY AYY
CHECKED BY MYH
DRAWN BY WZ/YZ
PROJECT MGR. AYY

EXISTING SIGNAGE AND
PAVEMENT MARKING – 2

DIVISION CHIEF
DATE
FILE
SHEET 113 OF 173

p:\60570\civil\plans\pSN_E002_60570.dgn
Tuesday, July 28, 2015 AT 04:38 PM
$PLTDRVS$ $PENTBLS$

REG	STATE	PROJECT	SHEET NO.	TOTAL SHEETS
3	D.C.	FAP No. STP-8888(480)	114	173

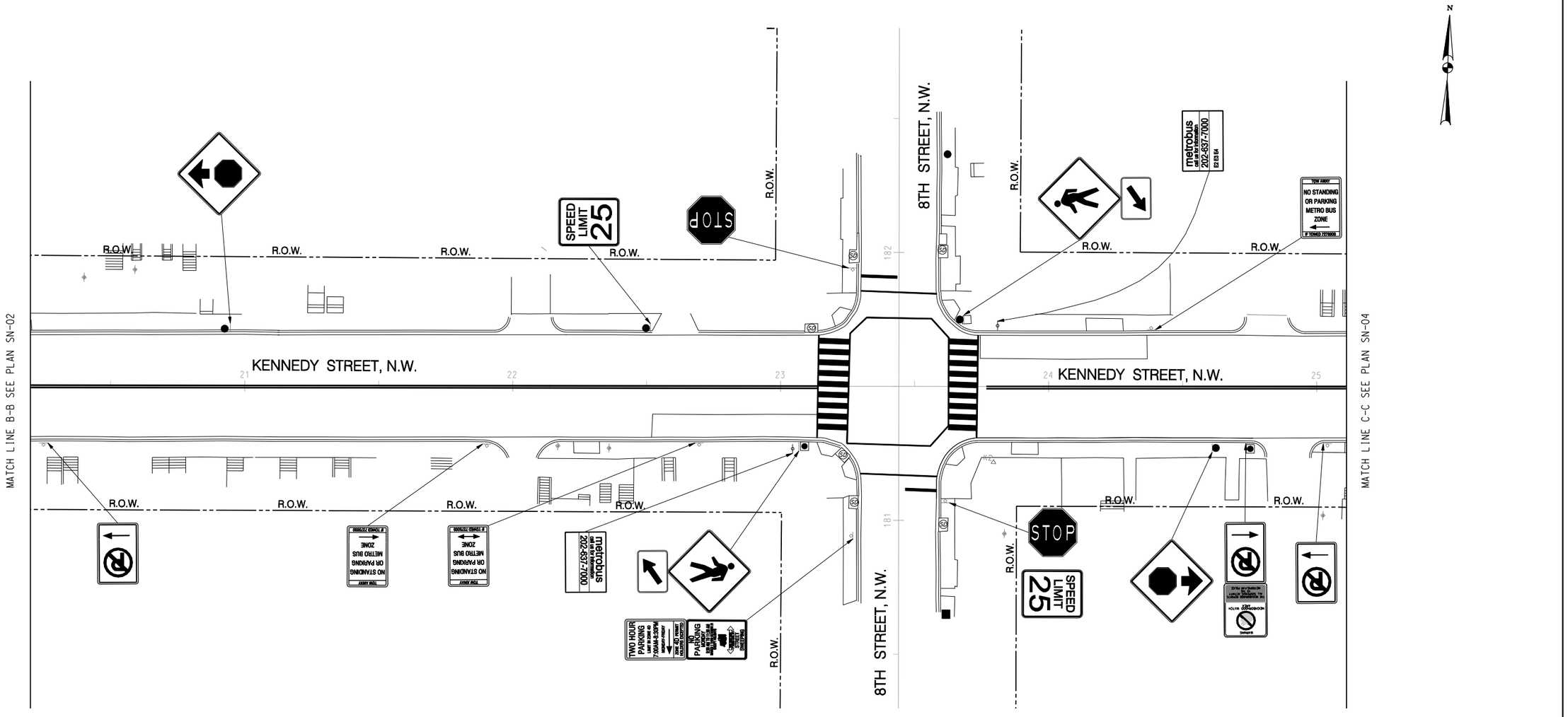

GRAPHIC SCALE

20 10 0 20 40

1" = 20'-0" HORIZ.

Precision Systems, Inc.
Engineers, Planners and Architects
WASHINGTON, D.C.

NO	DESCRIPTION	NAME	DATE

REVISIONS

SN-03

D.C. DEPARTMENT OF TRANSPORTATION
INFRASTRUCTURE PROJECT MANAGEMENT ADMINISTRATION
PROJECT MANAGEMENT DIVISION

KENNEDY STEET, N.W. IMPROVEMENT
FROM GEORGIA AVENUE TO NORTH CAPITOL STREET

PROJECT ENG. WZ
DESIGNED BY AYY
CHECKED BY MYH
DRAWN BY WZ/YZ
PROJECT MGR. AYY

EXISTING SIGNAGE AND
PAVEMENT MARKING – 3

DIVISION CHIEF
DATE
FILE
SHEET 114 OF 173

p:\60570\civil\plans\pSN_E003_60570.dgn
Tuesday, July 28, 2015 AT 04:38 PM
$PLTDRVS$
$PENTBLS$

REG	STATE	PROJECT	SHEET NO.	TOTAL SHEETS
3	D.C.	FAP No. STP-8888(480)	115	173

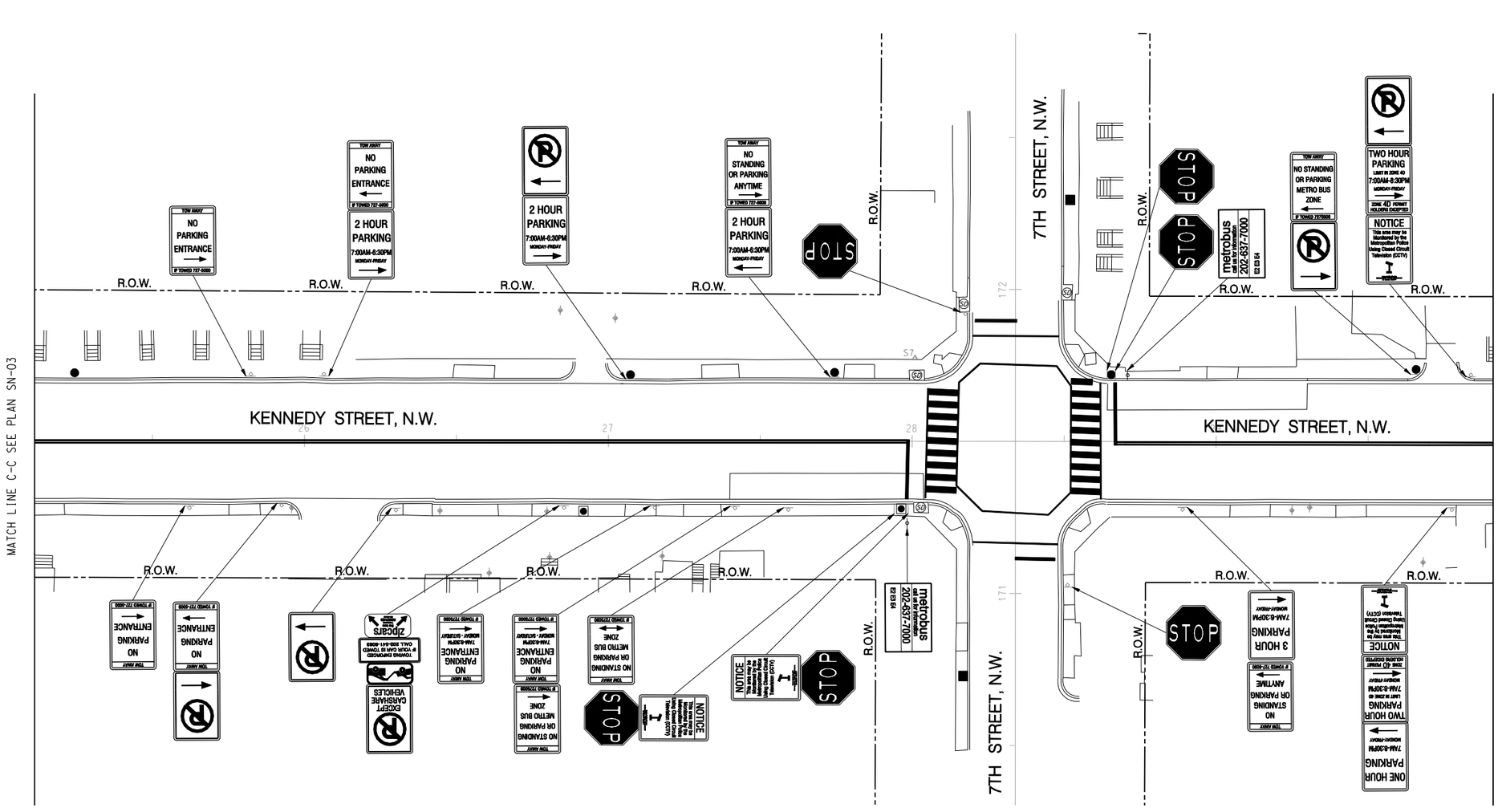

GRAPHIC SCALE

20 10 0 20 40

1" = 20'-0" HORIZ.

Precision Systems, Inc.
Engineers, Planners and Architects
WASHINGTON, D.C.

NO.	DESCRIPTION	NAME	DATE
	REVISIONS		

SN-04

D.C. DEPARTMENT OF TRANSPORTATION
INFRASTRUCTURE PROJECT MANAGEMENT ADMINISTRATION
PROJECT MANAGEMENT DIVISION

KENNEDY STEET, N.W. IMPROVEMENT
FROM GEORGIA AVENUE TO NORTH CAPITOL STREET

PROJECT ENG. WZ
DESIGNED BY AYY
CHECKED BY MYH
DRAWN BY WZ/YZ
PROJECT MGR. AYY

EXISTING SIGNAGE AND
PAVEMENT MARKING – 4

DIVISION CHIEF
DATE
FILE
SHEET 115 OF 173

p:\60570\civil\plans\pSN_E004_60570.dgn
Tuesday, July 28, 2015 AT 04:38 PM
$PENTBLS$
$PLTDRVS$

REG	STATE	PROJECT	SHEET NO.	TOTAL SHEETS
3	D.C.	FAP No. STP-8888(480)	116	173

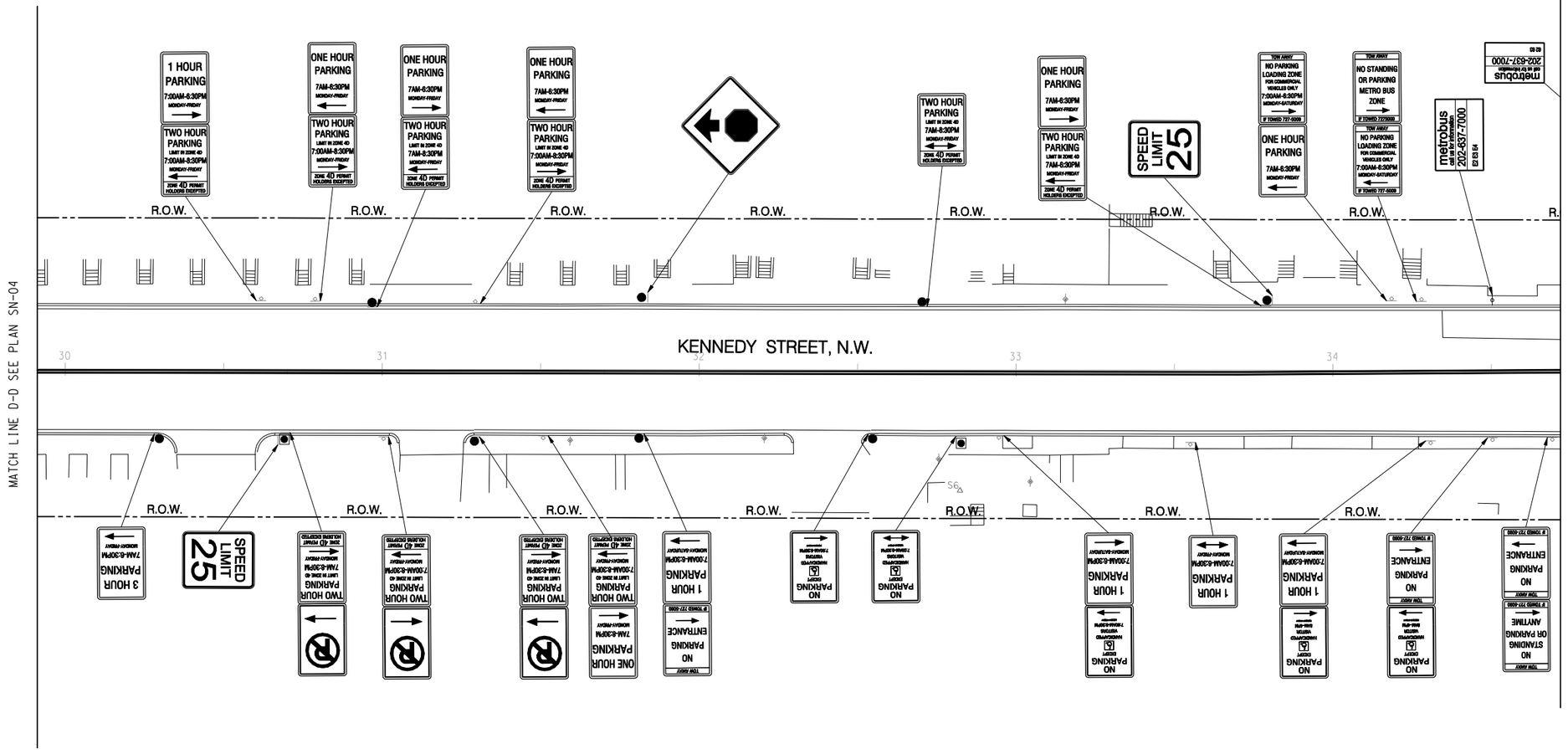

GRAPHIC SCALE

20 10 0 20 40

1" = 20'-0" HORIZ.

Precision Systems, Inc.
Engineers, Planners and Architects
WASHINGTON, D.C.

NO	DESCRIPTION	NAME	DATE

REVISIONS

SN-05

D.C. DEPARTMENT OF TRANSPORTATION
INFRASTRUCTURE PROJECT MANAGEMENT ADMINISTRATION
PROJECT MANAGEMENT DIVISION

KENNEDY STEET, N.W. IMPROVEMENT
FROM GEORGIA AVENUE TO NORTH CAPITOL STREET

EXISTING SIGNAGE AND
PAVEMENT MARKING – 5

PROJECT ENG. WZ
DESIGNED BY AYY
CHECKED BY MYH
DRAWN BY WZ/YZ
PROJECT MGR. AYY

DIVISION CHIEF
DATE
FILE
SHEET 116 OF 173

p:\60570\civil\plans\pSN_E005_60570.dgn
Tuesday, July 28, 2015 AT 04:39 PM
$PLTDRVS$
$PENTBLS$

REG	STATE	PROJECT	SHEET NO.	TOTAL SHEETS
3	D.C.	FAP No. STP-8888(480)	117	173

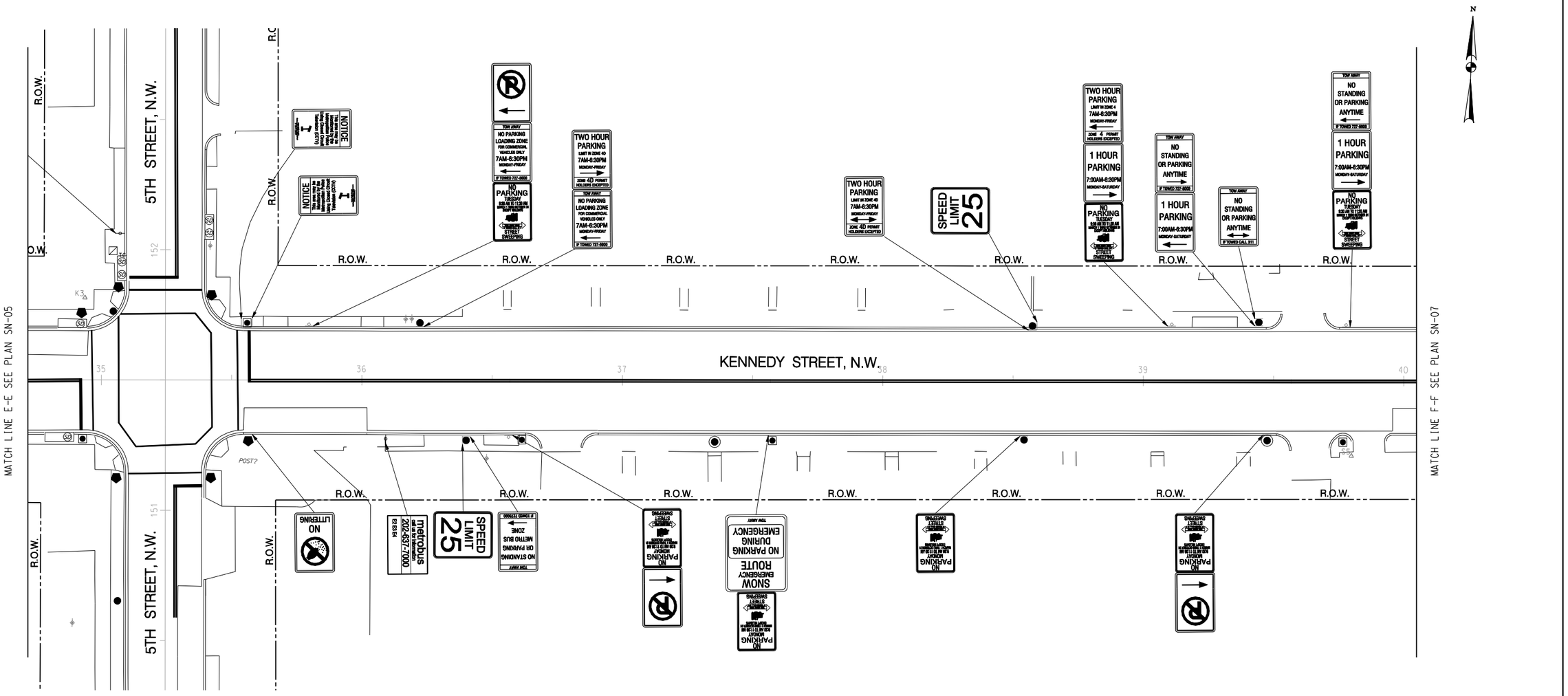

GRAPHIC SCALE

20 10 0 20 40

1" = 20'-0" HORIZ.

Precision Systems, Inc.
Engineers, Planners and Architects
WASHINGTON, D.C.

NO.	DESCRIPTION	NAME	DATE

REVISIONS

SN-06

D.C. DEPARTMENT OF TRANSPORTATION
INFRASTRUCTURE PROJECT MANAGEMENT ADMINISTRATION
PROJECT MANAGEMENT DIVISION

KENNEDY STEET, N.W. IMPROVEMENT
FROM GEORGIA AVENUE TO NORTH CAPITOL STREET

PROJECT ENG. WZ
DESIGNED BY AYY
CHECKED BY MYH
DRAWN BY WZ/YZ
PROJECT MGR. AYY

EXISTING SIGNAGE AND
PAVEMENT MARKING – 6

DIVISION CHIEF
DATE
FILE
SHEET 117 OF 173

p:\60570\civil\plans\SN-E006_60570.dgn
Tuesday, July 28, 2015 AT 04:39 PM
$PENTBLS$
$PLTDRVS$

REG	STATE	PROJECT	SHEET NO.	TOTAL SHEETS
3	D.C.	FAP No. STP-8888(480)	118	173

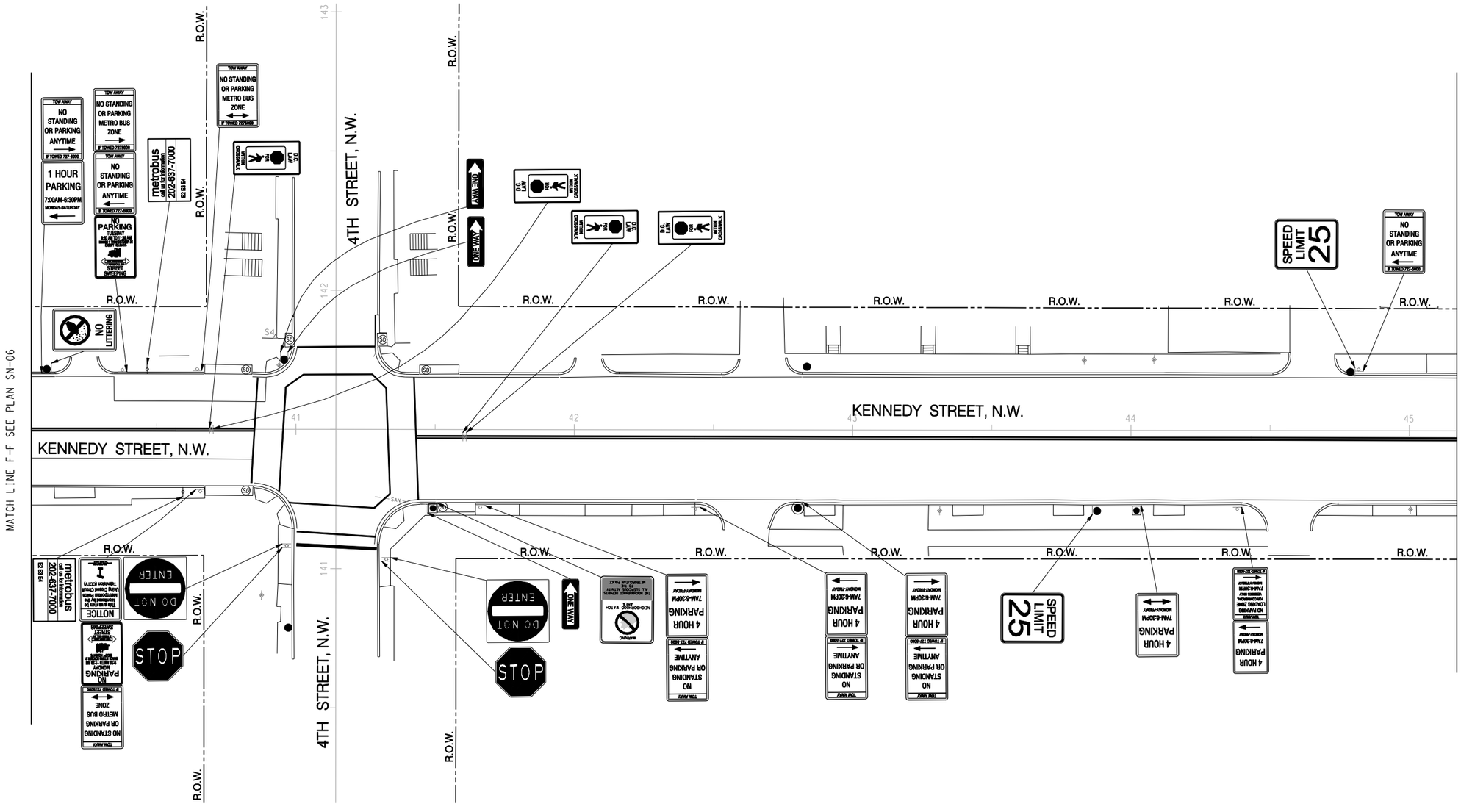

GRAPHIC SCALE

20 10 0 20 40

1" = 20'-0" HORIZ.

Precision Systems, Inc.
Engineers, Planners and Architects
WASHINGTON, D.C.

NO	DESCRIPTION	NAME	DATE

REVISIONS

SN-07

D.C. DEPARTMENT OF TRANSPORTATION
INFRASTRUCTURE PROJECT MANAGEMENT ADMINISTRATION
PROJECT MANAGEMENT DIVISION

KENNEDY STEET, N.W. IMPROVEMENT
FROM GEORGIA AVENUE TO NORTH CAPITOL STREET

PROJECT ENG. WZ
DESIGNED BY AYY
CHECKED BY MYH
DRAWN BY WZ/YZ
PROJECT MGR. AYY

EXISTING SIGNAGE AND
PAVEMENT MARKING – 7

DIVISION CHIEF
DATE
FILE
SHEET 118 OF 173

p:\60570\civil\plans\pSN-E007-60570.dgn
Tuesday, July 28, 2015 AT 04:40 PM
$PENTBLS$
$PLTDRVS$

REG	STATE	PROJECT	SHEET NO.	TOTAL SHEETS
3	D.C.	FAP No. STP-8888(480)	119	173

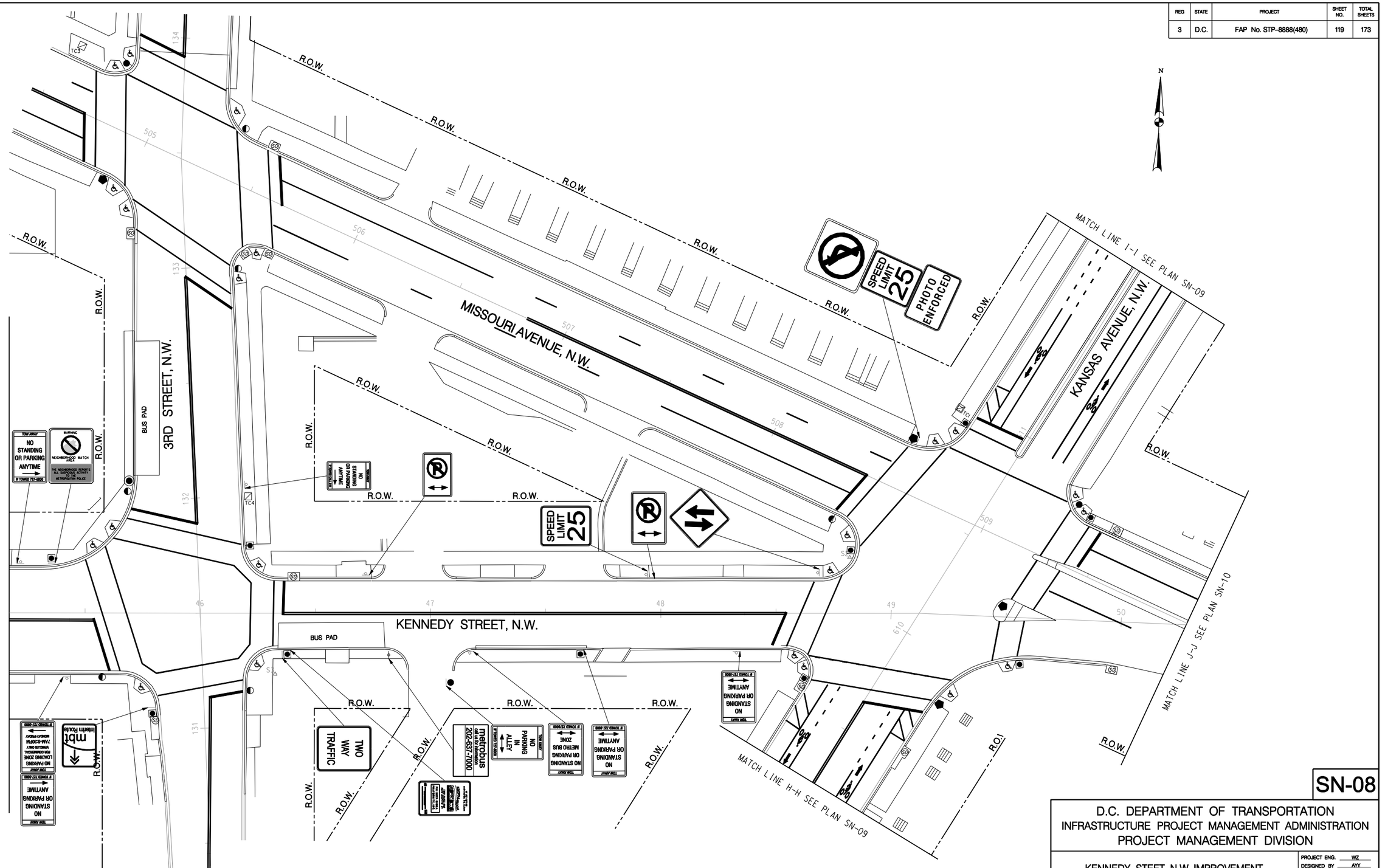

GRAPHIC SCALE

20 10 0 20 40

1" = 20'-0" HORIZ.

Precision Systems, Inc.
Engineers, Planners and Architects
WASHINGTON, D.C.

NO.	DESCRIPTION	NAME	DATE

REVISIONS

SN-08

D.C. DEPARTMENT OF TRANSPORTATION
INFRASTRUCTURE PROJECT MANAGEMENT ADMINISTRATION
PROJECT MANAGEMENT DIVISION

KENNEDY STEET, N.W. IMPROVEMENT
FROM GEORGIA AVENUE TO NORTH CAPITOL STREET

EXISTING SIGNAGE AND
PAVEMENT MARKING – 8

PROJECT ENG.	WZ
DESIGNED BY	AYY
CHECKED BY	MYH
DRAWN BY	WZ/YZ
PROJECT MGR.	AYY

DIVISION CHIEF

DATE

FILE

SHEET 119 OF 173

p:\60570\civil\plans\pSN_E008_60570.dgn
Tuesday, July 28, 2015 AT 04:40 PM
$PLTDRVS$
$PENTBLS$

REG	STATE	PROJECT	SHEET NO.	TOTAL SHEETS
3	D.C.	FAP No. STP-8888(480)	120	173

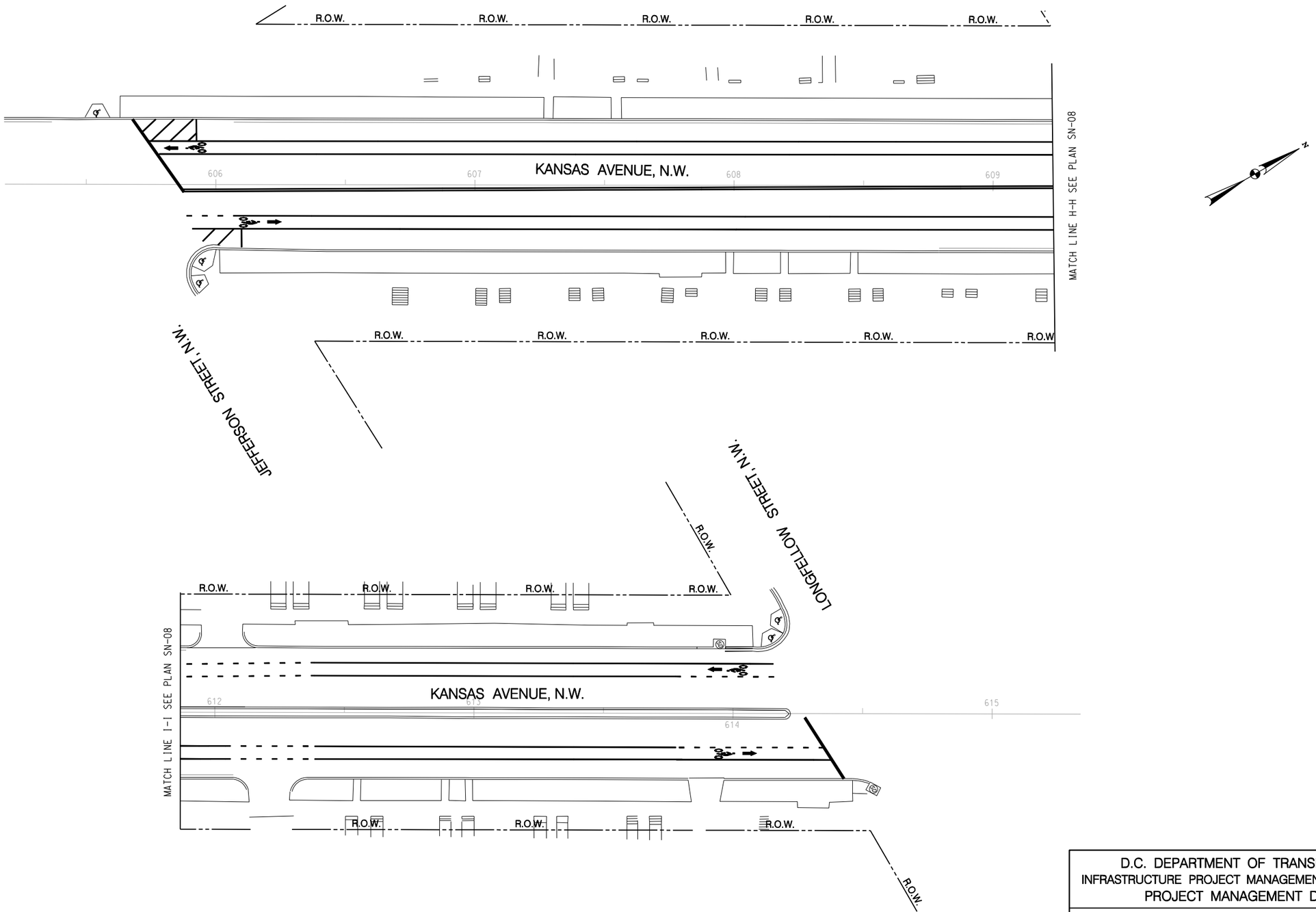

GRAPHIC SCALE

20 10 0 20 40

1" = 20'-0" HORIZ.

Precision Systems, Inc.
Engineers, Planners and Architects
WASHINGTON, D.C.

NO.	DESCRIPTION	NAME	DATE

REVISIONS

SN-09

D.C. DEPARTMENT OF TRANSPORTATION
INFRASTRUCTURE PROJECT MANAGEMENT ADMINISTRATION
PROJECT MANAGEMENT DIVISION

KENNEDY STEET, N.W. IMPROVEMENT
FROM GEORGIA AVENUE TO NORTH CAPITOL STREET

PROJECT ENG. WZ
DESIGNED BY AYY
CHECKED BY MYH
DRAWN BY WZ/YZ
PROJECT MGR. AYY

EXISTING SIGNAGE AND
PAVEMENT MARKING – 9

DIVISION CHIEF

DATE

FILE

SHEET 120 OF 173

p:\60570\civil\plans\pSN_E009_60570.dgn
Tuesday, July 28, 2015 AT 04:40 PM
$PLTDRVS$
$PENTBLS$

REG	STATE	PROJECT	SHEET NO.	TOTAL SHEETS
3	D.C.	FAP No. STP-8888(480)	121	173

KENNEDY STREET, N.W.

MISSOURI AVENUE, N.W.

2ND STREET, N.W.

MATCH LINE J-J SEE PLAN SN-08

MATCH LINE K-K SEE PLAN SN-11

R.O.W.

NO STANDING OR PARKING ANYTIME
IF TOWED 727-5000

1 HOUR PARKING
7:00AM-6:30PM
MONDAY-FRIDAY

YIELD

STOP

TWO HOUR PARKING
LIMIT IN ZONE 4
7:00AM-6:30PM
MONDAY-FRIDAY
ZONE 4 PERMIT HOLDERS EXCEPTED

NO PARKING ENTRANCE

NO STANDING OR PARKING ANYTIME

1 HOUR PARKING
7:00AM-6:30PM
MONDAY-FRIDAY

NEW HAMPSHIRE AVENUE NORTHBOUND

SNOW EMERGENCY ROUTE NO PARKING DURING EMERGENCY

SNOW Emergency ROUTE NO PARKING DURING EMERGENCY

metrobus 202-637-7000 B2 B4

PEDESTRIANS YOU MUST PUSH BUTTON TO CALL FOR WALK SIGNAL

SPEED LIMIT 25

GRAPHIC SCALE

20 10 0 20 40

1" = 20'-0" HORIZ.

Precision Systems, Inc.
Engineers, Planners and Architects
WASHINGTON, D.C.

NO.	DESCRIPTION	NAME	DATE
	REVISIONS		

SN-10

D.C. DEPARTMENT OF TRANSPORTATION
INFRASTRUCTURE PROJECT MANAGEMENT ADMINISTRATION
PROJECT MANAGEMENT DIVISION

KENNEDY STEET, N.W. IMPROVEMENT
FROM GEORGIA AVENUE TO NORTH CAPITOL STREET

PROJECT ENG. WZ
DESIGNED BY AYY
CHECKED BY MYH
DRAWN BY WZ/YZ
PROJECT MGR. AYY

EXISTING SIGNAGE AND
PAVEMENT MARKING – 10

DIVISION CHIEF
DATE
FILE
SHEET 121 OF 173

p:\60570\civil\plans\pSN_E010_60570.dgn
Tuesday, July 28, 2015 AT 04:41 PM
$PLTDRVS$ $PENTBLS$

REG	STATE	PROJECT	SHEET NO.	TOTAL SHEETS
3	D.C.	FAP No. STP-8888(480)	122	173

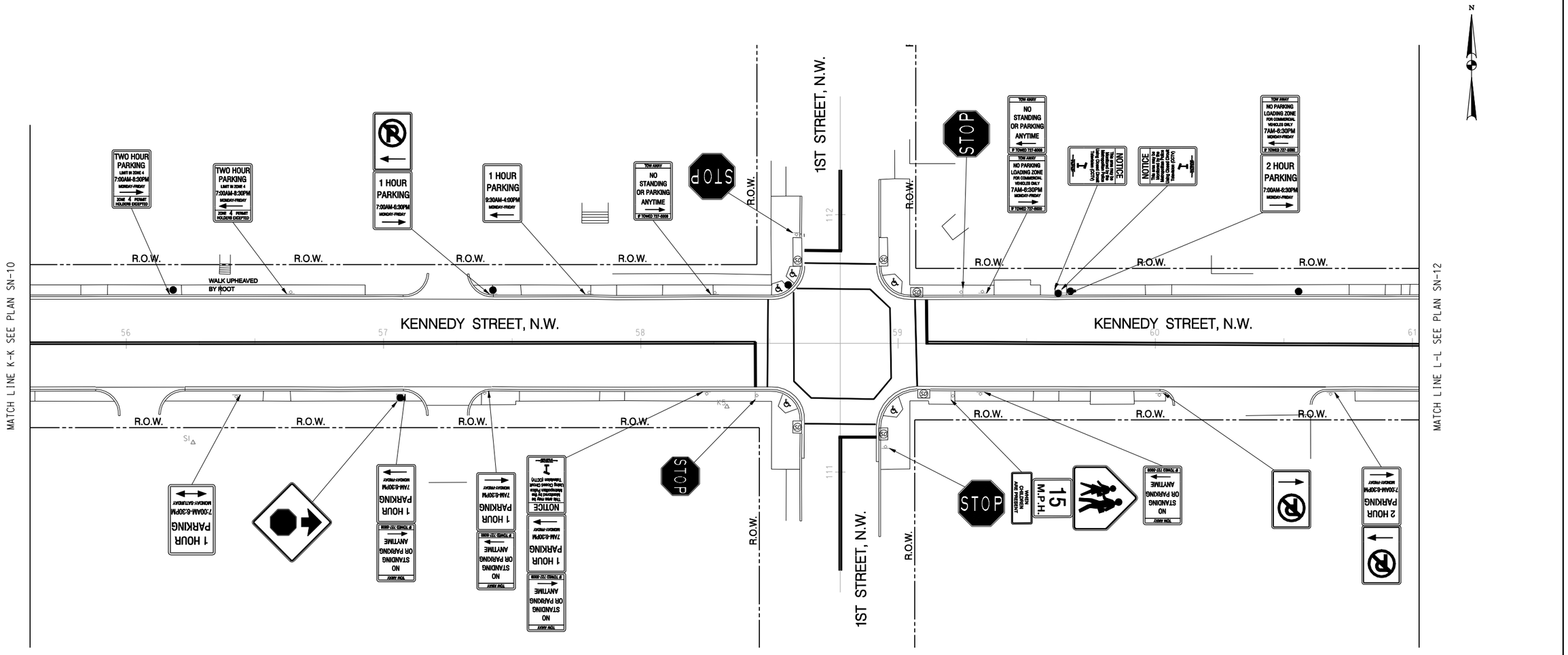

GRAPHIC SCALE

20 10 0 20 40

1" = 20'-0" HORIZ.

Precision Systems, Inc.
Engineers, Planners and Architects
WASHINGTON, D.C.

NO.	DESCRIPTION	NAME	DATE

REVISIONS

SN-11

D.C. DEPARTMENT OF TRANSPORTATION
INFRASTRUCTURE PROJECT MANAGEMENT ADMINISTRATION
PROJECT MANAGEMENT DIVISION

KENNEDY STEET, N.W. IMPROVEMENT
FROM GEORGIA AVENUE TO NORTH CAPITOL STREET

PROJECT ENG. WZ
DESIGNED BY AYY
CHECKED BY MYH
DRAWN BY WZ/YZ
PROJECT MGR. AYY

EXISTING SIGNAGE AND
PAVEMENT MARKING – 11

DIVISION CHIEF
DATE
FILE
SHEET 122 OF 173

p:\60570\civil\plans\pSN_E011_60570.dgn
Tuesday, July 28, 2015 AT 04:41 PM
$PENTBLS$
$PLTDRVS$

REG	STATE	PROJECT	SHEET NO.	TOTAL SHEETS
3	D.C.	FAP No. STP-8888(480)	123	173

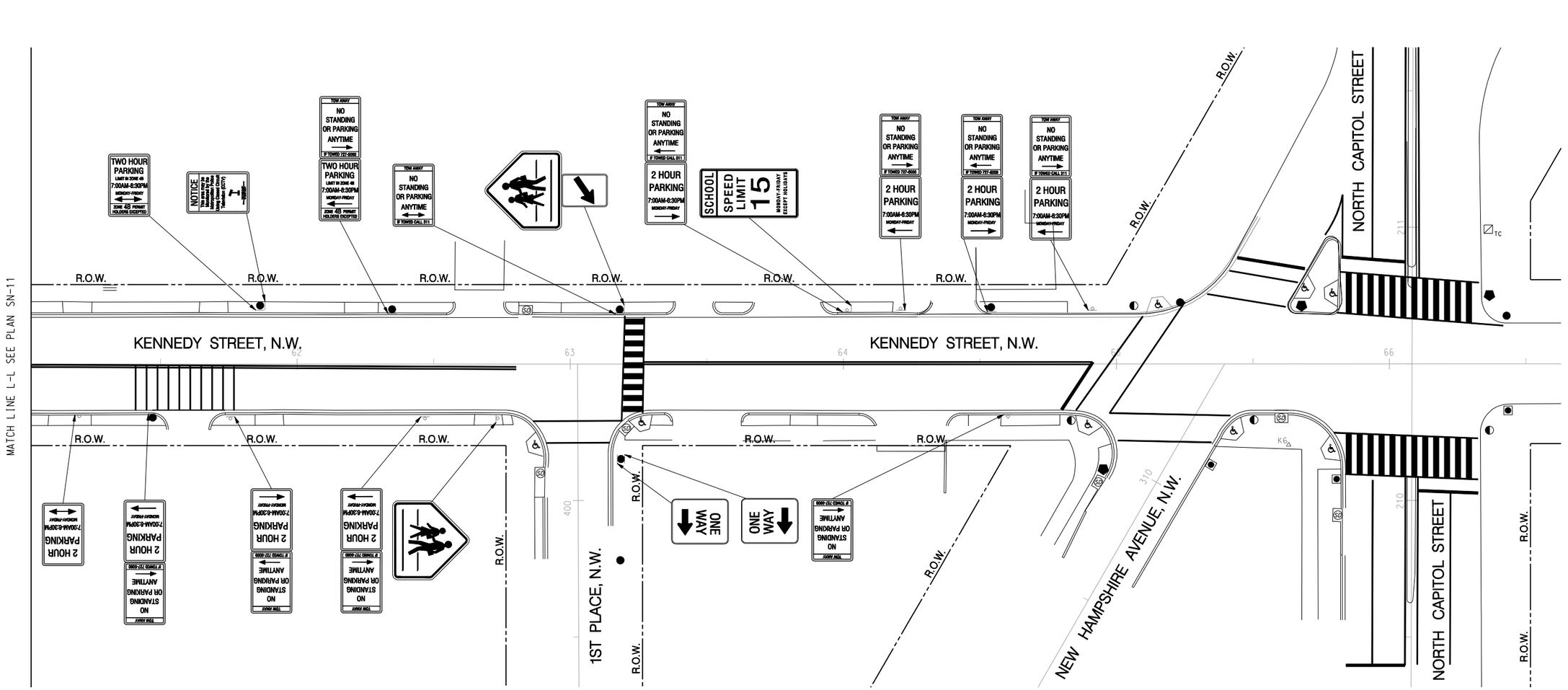

SN-12

GRAPHIC SCALE
20 10 0 20 40
1" = 20'-0" HORIZ.

Precision Systems, Inc.
Engineers, Planners and Architects
WASHINGTON, D.C.

NO	DESCRIPTION	NAME	DATE

REVISIONS

D.C. DEPARTMENT OF TRANSPORTATION
INFRASTRUCTURE PROJECT MANAGEMENT ADMINISTRATION
PROJECT MANAGEMENT DIVISION

KENNEDY STEET, N.W. IMPROVEMENT
FROM GEORGIA AVENUE TO NORTH CAPITOL STREET

EXISTING SIGNAGE AND
PAVEMENT MARKING – 12

PROJECT ENG. WZ
DESIGNED BY AYY
CHECKED BY MYH
DRAWN BY WZ/YZ
PROJECT MGR. AYY

DIVISION CHIEF
DATE
FILE
SHEET 123 OF 173

p:\60570\civil\plans\pSN_E02_60570.dgn
Tuesday, July 28, 2015 AT 04:42 PM
$PLTDRVS$
$PENTBLS$

REG	STATE	PROJECT	SHEET NO.	TOTAL SHEETS
3	D.C.	FAP No. STP-8888(480)	124	173

GENERAL NOTES:

1. ALL EXISTING TRAFFIC AND PARKING SIGNS WITHIN THE LIMITS OF WORK SHALL BE REMOVED.
2. THE CONTRACTOR SHALL FOLLOW THIS PROPOSED SIGNAGE PLAN TO INSTALL NEW TRAFFIC AND PARKING SIGNS.
3. THE CONTRACTOR SHALL COORDINATE WITH MR. JAMIE CEPLER (WMATA) AT 202-962-6085 TWO WEEKS PRIOR TO THE INSTALLATION OF BUS STOP SIGNS AND POSTS. WMATA TO PERFORM THIS INSTALLATION.

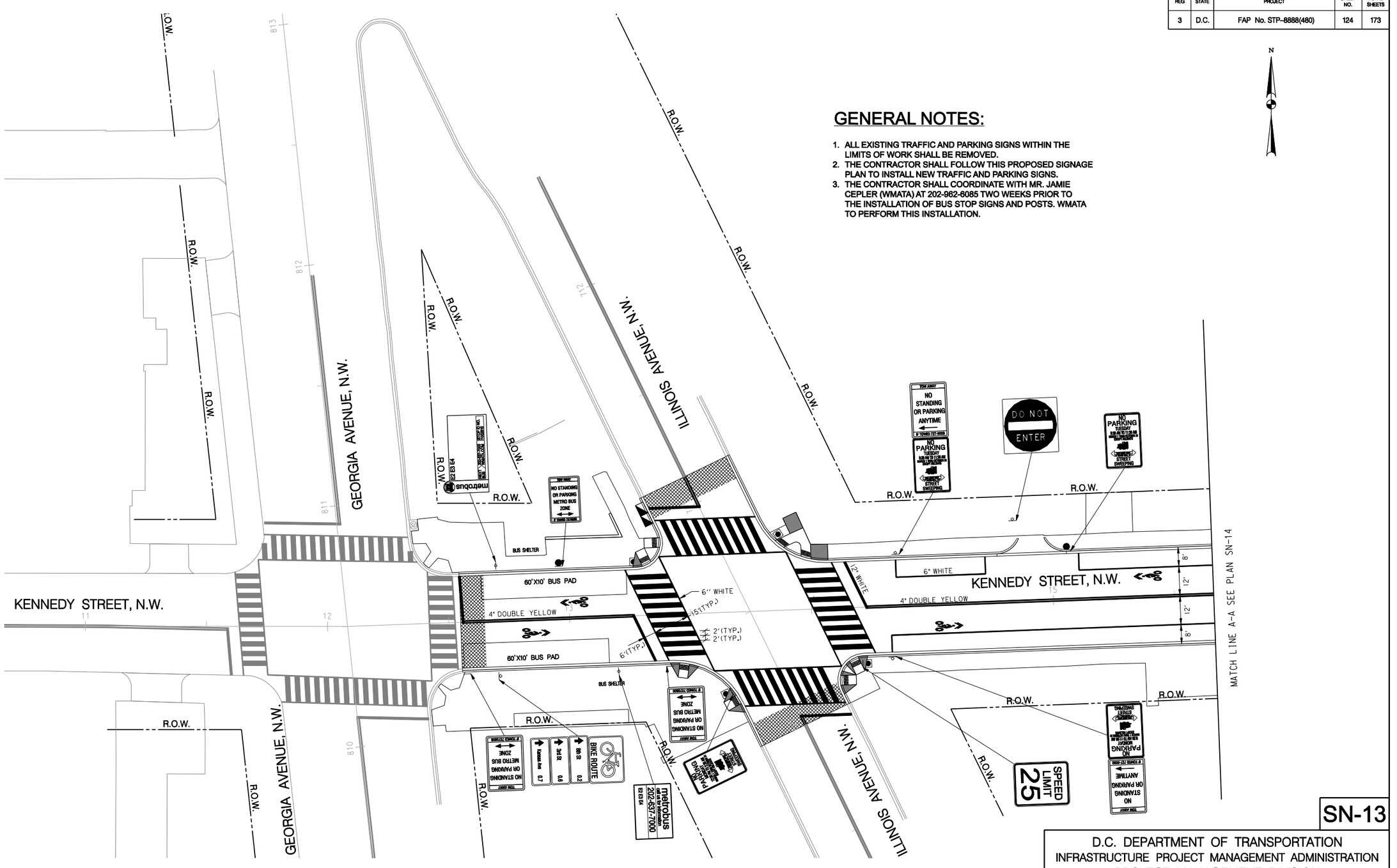

SN-13

GRAPHIC SCALE
20 10 0 20 40
1" = 20'-0" HORIZ.

Precision Systems, Inc.
Engineers, Planners and Architects
WASHINGTON, D.C.

NO	DESCRIPTION	NAME	DATE
	REVISIONS		

D.C. DEPARTMENT OF TRANSPORTATION
INFRASTRUCTURE PROJECT MANAGEMENT ADMINISTRATION
PROJECT MANAGEMENT DIVISION

KENNEDY STEET, N.W. IMPROVEMENT
FROM GEORGIA AVENUE TO NORTH CAPITOL STREET

PROPOSED SIGNAGE AND
PAVEMENT MARKING PLAN – 1

PROJECT ENG. WZ
DESIGNED BY AYY
CHECKED BY MYH
DRAWN BY WZ/YZ
PROJECT MGR. AYY

DIVISION CHIEF
DATE
FILE
SHEET 124 OF 173

p:\60570\civil\plans\pSN_P001_60570.dgn
Tuesday, July 28, 2015 AT 04:42 PM
$PLTDRVS$
$PENTBLS$

REG	STATE	PROJECT	SHEET NO.	TOTAL SHEETS
3	D.C.	FAP No. STP-8888(480)	125	173

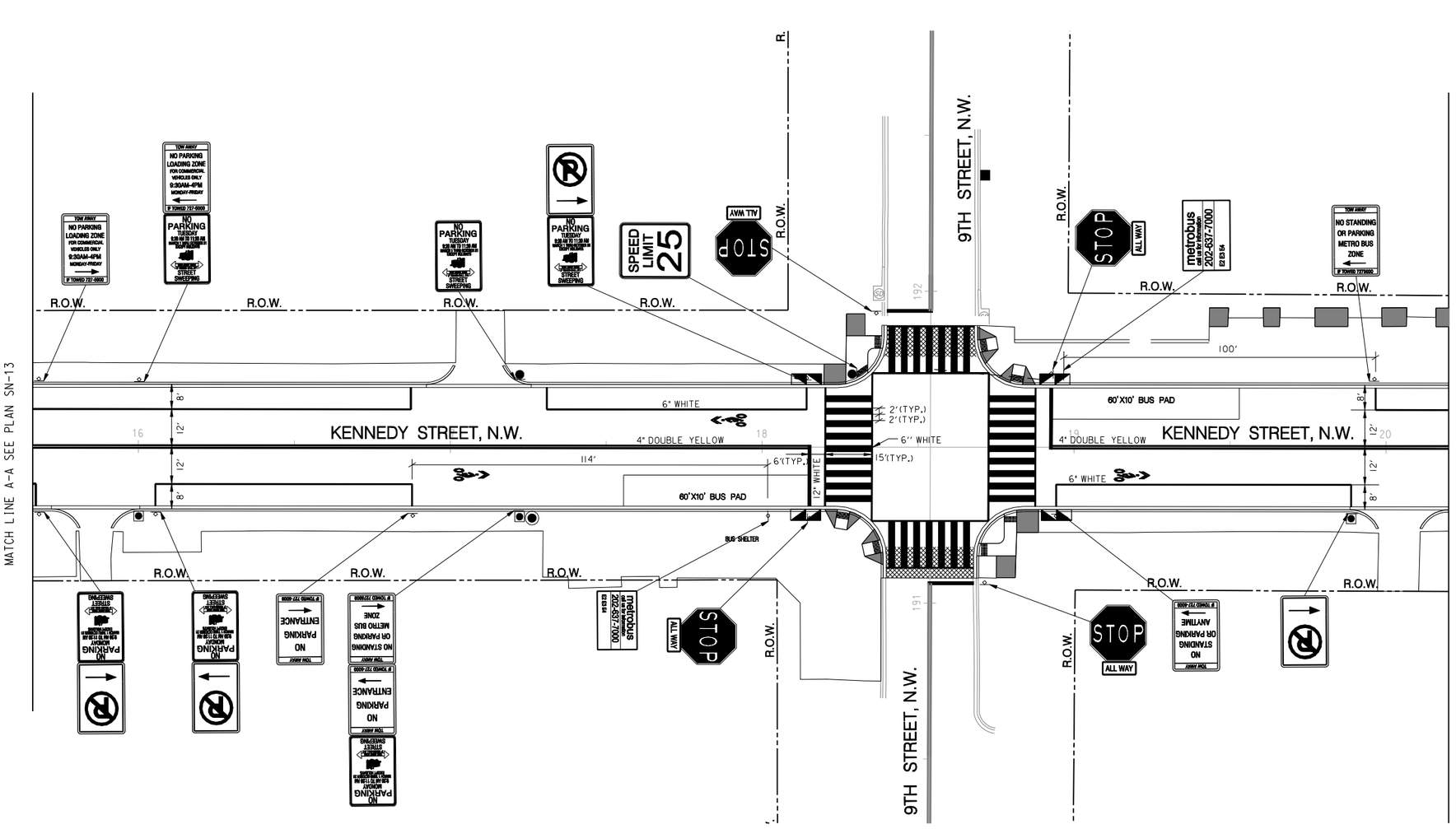

SN-14

D.C. DEPARTMENT OF TRANSPORTATION
INFRASTRUCTURE PROJECT MANAGEMENT ADMINISTRATION
PROJECT MANAGEMENT DIVISION

KENNEDY STEET, N.W. IMPROVEMENT
FROM GEORGIA AVENUE TO NORTH CAPITOL STREET

PROJECT ENG. WZ
DESIGNED BY AYY
CHECKED BY MYH
DRAWN BY WZ/YZ
PROJECT MGR. AYY

PROPOSED SIGNAGE AND
PAVEMENT MARKING PLAN – 2

DIVISION CHIEF
DATE
FILE
SHEET 125 OF 173

GRAPHIC SCALE
20 10 0 20 40
1" = 20'-0" HORIZ.

Precision Systems, Inc.
Engineers, Planners and Architects
WASHINGTON, D.C.

NO.	DESCRIPTION	NAME	DATE

REVISIONS

p:\60570\civil\plans\SN_P002_60570.dgn
Tuesday, July 28, 2015 AT 04:42 PM
$PENTBLS$
$PLTDRVS$

REG	STATE	PROJECT	SHEET NO.	TOTAL SHEETS
3	D.C.	FAP No. STP-8888(480)	126	173

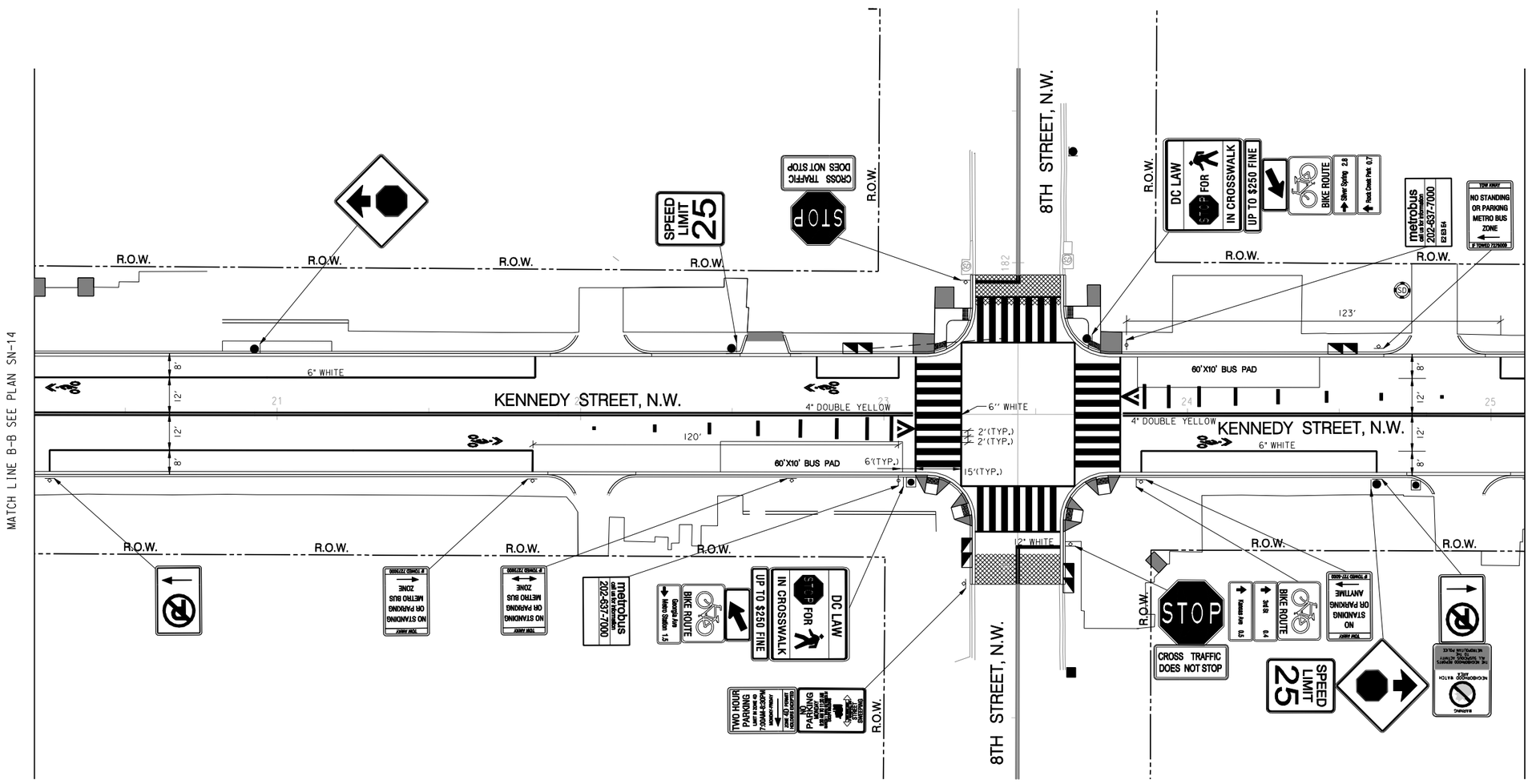

GRAPHIC SCALE

20 10 0 20 40

1" = 20'-0" HORIZ.

Precision Systems, Inc.
Engineers, Planners and Architects
WASHINGTON, D.C.

NO.	DESCRIPTION	NAME	DATE

REVISIONS

SN-15

D.C. DEPARTMENT OF TRANSPORTATION
INFRASTRUCTURE PROJECT MANAGEMENT ADMINISTRATION
PROJECT MANAGEMENT DIVISION

KENNEDY STEET, N.W. IMPROVEMENT
FROM GEORGIA AVENUE TO NORTH CAPITOL STREET

PROJECT ENG. WZ
DESIGNED BY AYY
CHECKED BY MYH
DRAWN BY WZ/YZ
PROJECT MGR. AYY

PROPOSED SIGNAGE AND
PAVEMENT MARKING PLAN – 3

DIVISION CHIEF
DATE
FILE
SHEET 126 OF 173

P:\60570\civil\plans\pSN_P003_60570.dgn
Tuesday, August 04, 2015 AT 02:36 PM
$PENTBLS$
$PLTDRVS$

REG	STATE	PROJECT	SHEET NO.	TOTAL SHEETS
3	D.C.	FAP No. STP-8888(480)	127	173

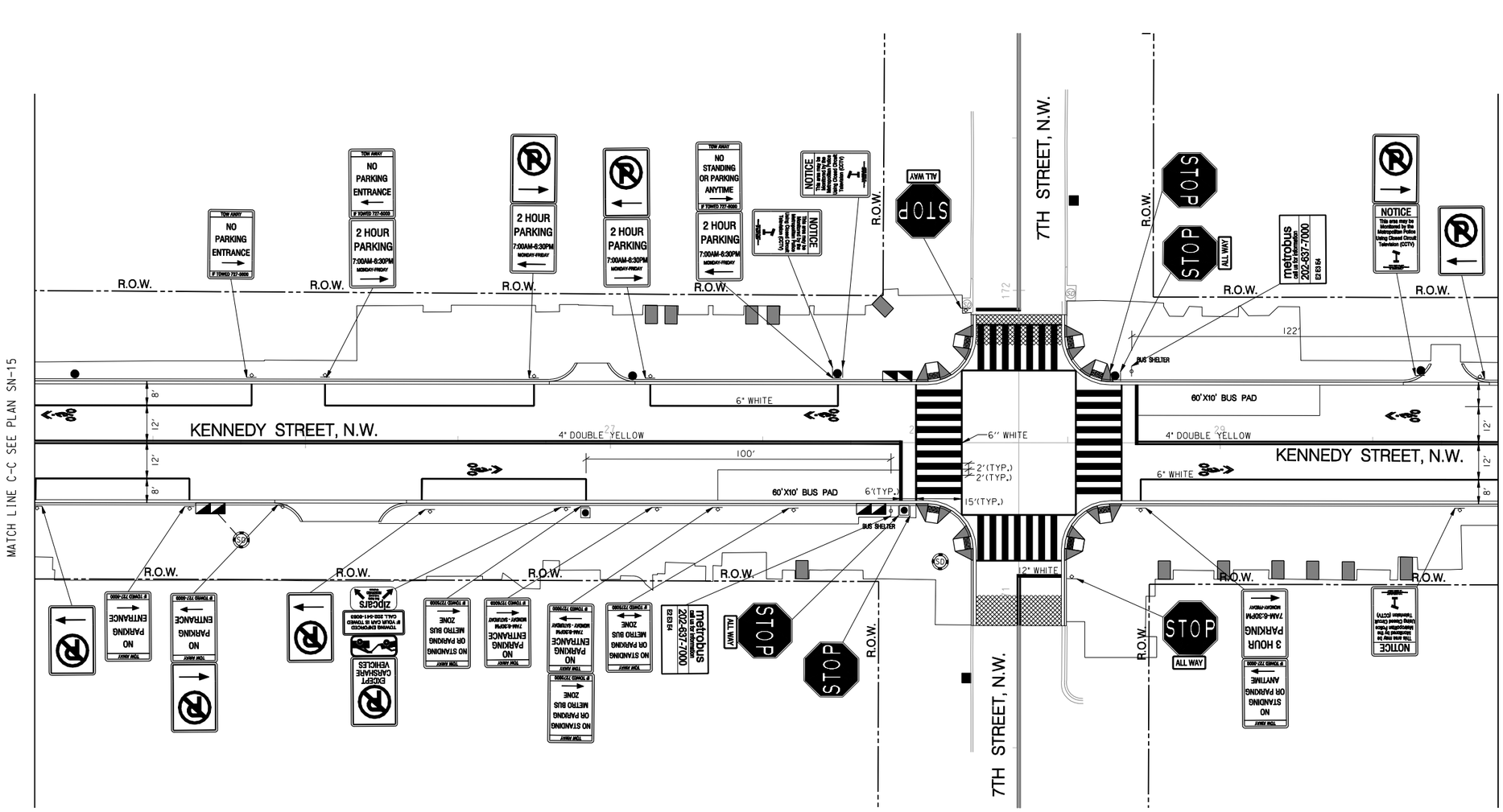

GRAPHIC SCALE

20 10 0 20 40

1" = 20'-0" HORIZ.

Precision Systems, Inc.
Engineers, Planners and Architects
WASHINGTON, D.C.

NO.	DESCRIPTION	NAME	DATE

REVISIONS

SN-16

D.C. DEPARTMENT OF TRANSPORTATION
INFRASTRUCTURE PROJECT MANAGEMENT ADMINISTRATION
PROJECT MANAGEMENT DIVISION

KENNEDY STEET, N.W. IMPROVEMENT
FROM GEORGIA AVENUE TO NORTH CAPITOL STREET

PROJECT ENG. WZ
DESIGNED BY AYY
CHECKED BY MYH
DRAWN BY WZ/YZ
PROJECT MGR. AYY

PROPOSED SIGNAGE AND
PAVEMENT MARKING PLAN – 4

DIVISION CHIEF
DATE
FILE
SHEET 127 OF 173

p:\60570\civil\plans\pSN_P004_60570.dgn
Tuesday, July 28, 2015 AT 04:43 PM
$PENTBLS$
$PLTDRVS$

REG	STATE	PROJECT	SHEET NO.	TOTAL SHEETS
3	D.C.	FAP No. STP-8888(480)	128	173

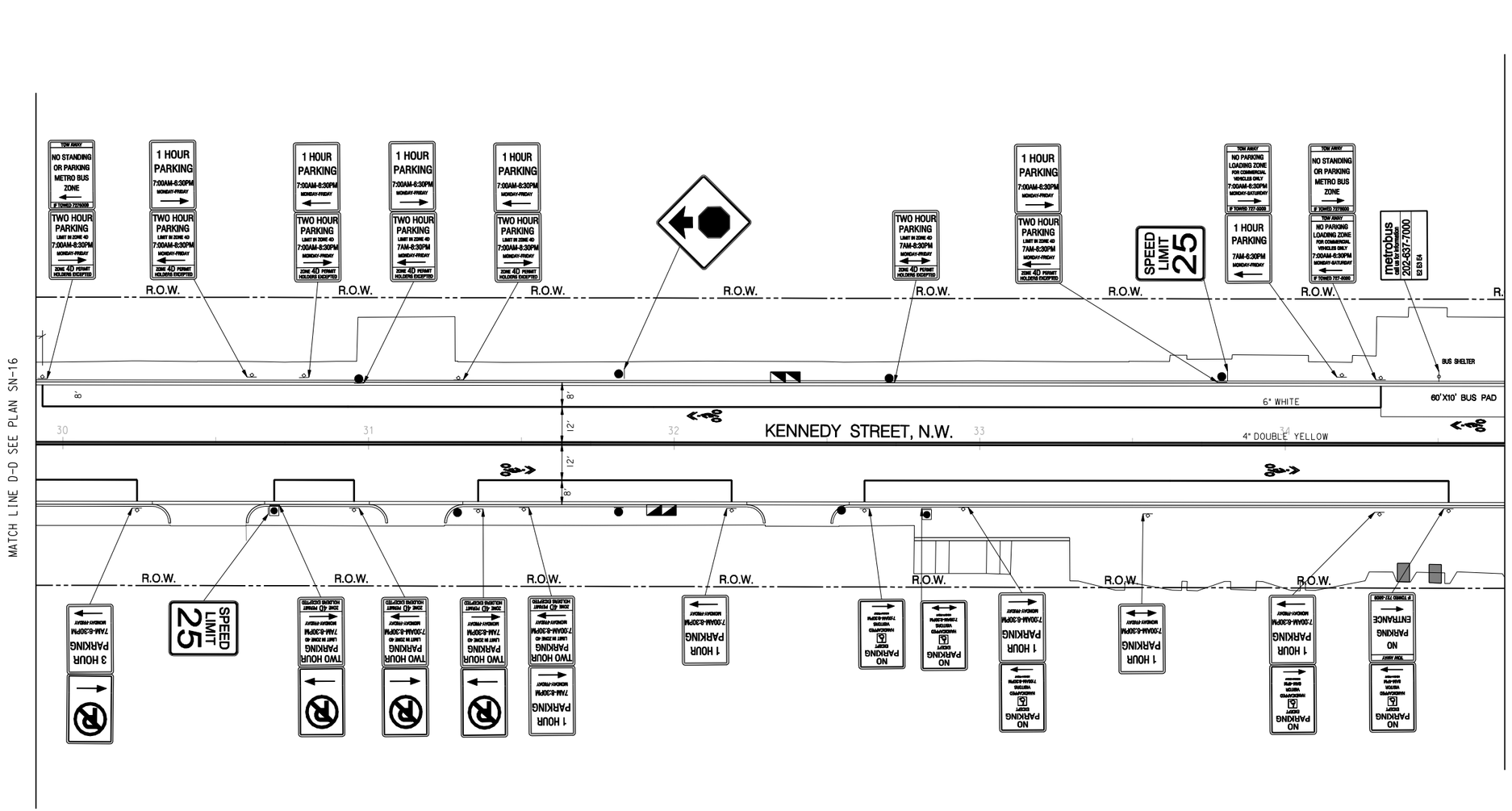

GRAPHIC SCALE
20 10 0 20 40
1" = 20'-0" HORIZ.

Precision Systems, Inc.
Engineers, Planners and Architects
WASHINGTON, D.C.

NO.	DESCRIPTION	NAME	DATE

REVISIONS

SN-17

D.C. DEPARTMENT OF TRANSPORTATION
INFRASTRUCTURE PROJECT MANAGEMENT ADMINISTRATION
PROJECT MANAGEMENT DIVISION

KENNEDY STEET, N.W. IMPROVEMENT
FROM GEORGIA AVENUE TO NORTH CAPITOL STREET

PROJECT ENG. WZ
DESIGNED BY AYY
CHECKED BY MYH
DRAWN BY WZ/YZ
PROJECT MGR. AYY

PROPOSED SIGNAGE AND
PAVEMENT MARKING PLAN – 5

DIVISION CHIEF
DATE
FILE
SHEET 128 OF 173

p:\60570\civil\plans\pSN_P005_60570.dgn
Tuesday, July 28, 2015 AT 04:44 PM
$PENTBLS$
$PLTDRVS$

REG	STATE	PROJECT	SHEET NO.	TOTAL SHEETS
3	D.C.	FAP No. STP-8888(480)	129	173

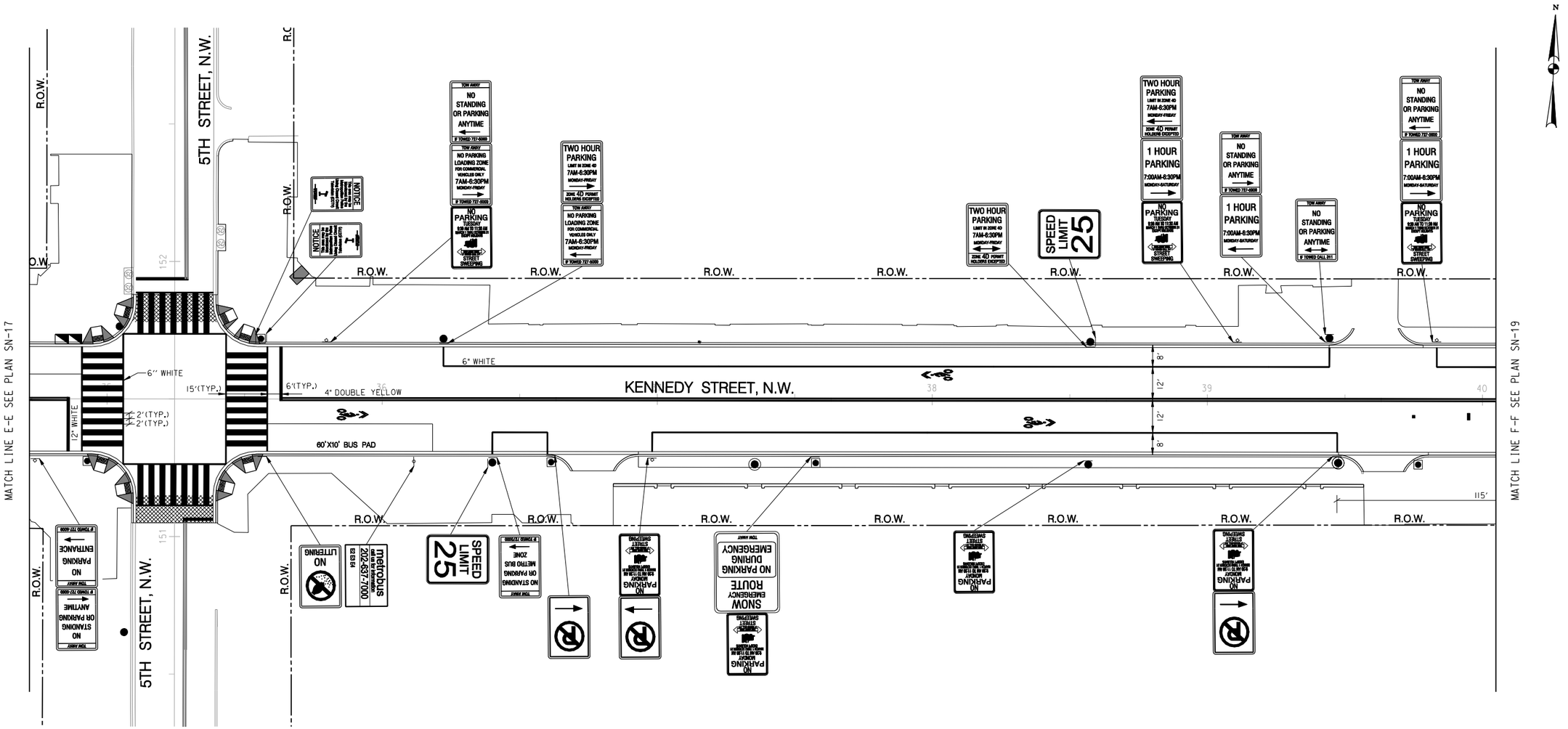

N

GRAPHIC SCALE

20 10 0 20 40

1" = 20'-0" HORIZ.

Precision Systems, Inc.
Engineers, Planners and Architects
WASHINGTON, D.C.

NO	DESCRIPTION	NAME	DATE

REVISIONS

SN-18

D.C. DEPARTMENT OF TRANSPORTATION
INFRASTRUCTURE PROJECT MANAGEMENT ADMINISTRATION
PROJECT MANAGEMENT DIVISION

KENNEDY STEET, N.W. IMPROVEMENT
FROM GEORGIA AVENUE TO NORTH CAPITOL STREET

PROJECT ENG. WZ
DESIGNED BY AYY
CHECKED BY MYH
DRAWN BY WZ/YZ
PROJECT MGR. AYY

PROPOSED SIGNAGE AND
PAVEMENT MARKING PLAN – 6

DIVISION CHIEF
DATE
FILE
SHEET 129 OF 173

P:\60570\civil\plans\pSN_P006_60570.dgn
Tuesday, August 04, 2015 AT 02:37 PM
$PLTDRV$
$PENTBL$

REG	STATE	PROJECT	SHEET NO.	TOTAL SHEETS
3	D.C.	FAP No. STP-8888(480)	130	173

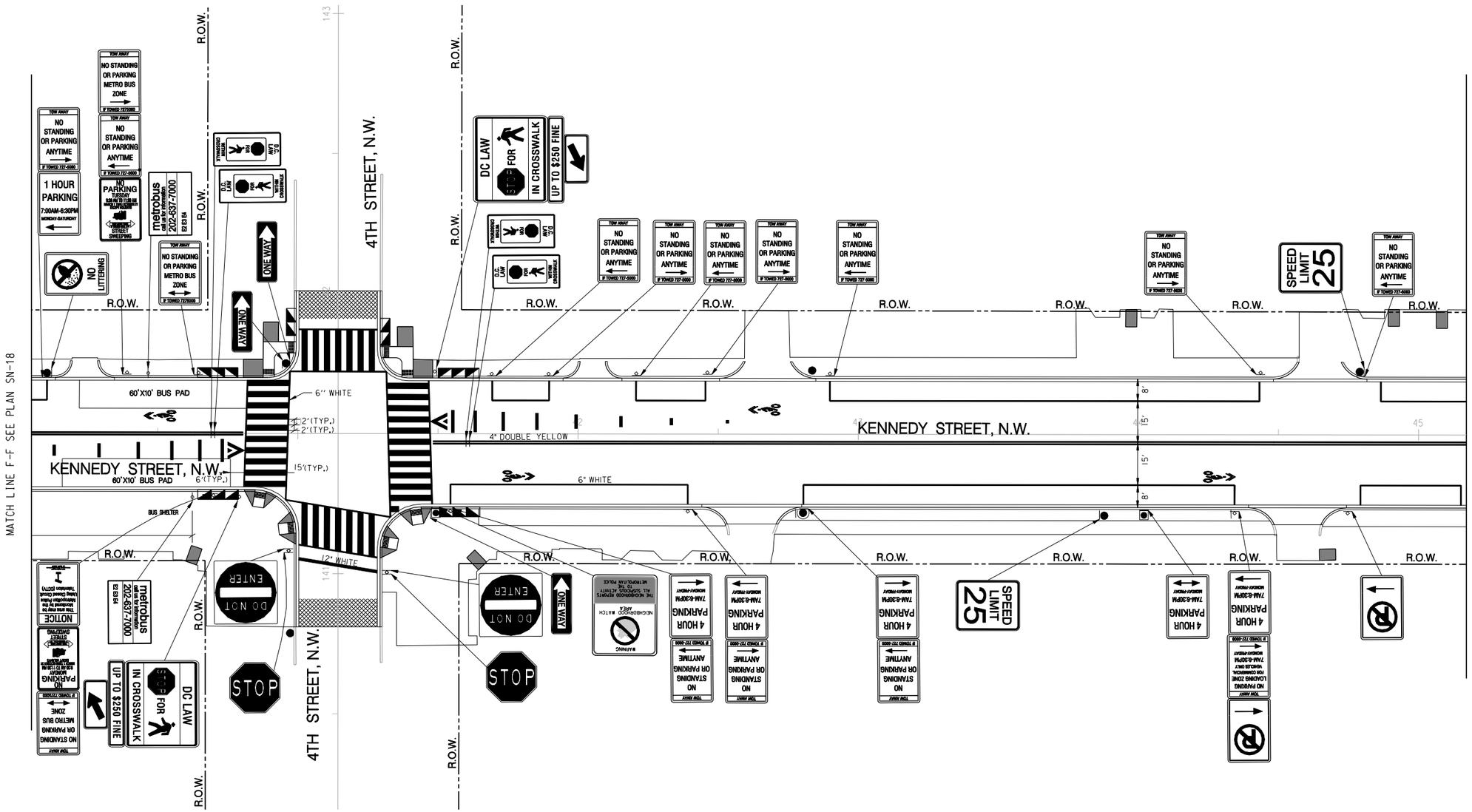

GRAPHIC SCALE

20 10 0 20 40

1" = 20'-0" HORIZ.

Precision Systems, Inc.
Engineers, Planners and Architects
WASHINGTON, D.C.

NO.	DESCRIPTION	NAME	DATE

REVISIONS

SN-19

D.C. DEPARTMENT OF TRANSPORTATION
INFRASTRUCTURE PROJECT MANAGEMENT ADMINISTRATION
PROJECT MANAGEMENT DIVISION

KENNEDY STEET, N.W. IMPROVEMENT
FROM GEORGIA AVENUE TO NORTH CAPITOL STREET

PROJECT ENG. WZ
DESIGNED BY AYY
CHECKED BY MYH
DRAWN BY WZ/YZ
PROJECT MGR. AYY

PROPOSED SIGNAGE AND
PAVEMENT MARKING PLAN – 7

DIVISION CHIEF
DATE
FILE
SHEET 130 OF 173

P:\60570\civil\plans\pSN_P007_60570.dgn
Tuesday, August 04, 2015 AT 02:38 PM
$PLTDRVS$ $PENTBLS$

REG	STATE	PROJECT	SHEET NO.	TOTAL SHEETS
3	D.C.	FAP No. STP-8888(480)	131	173

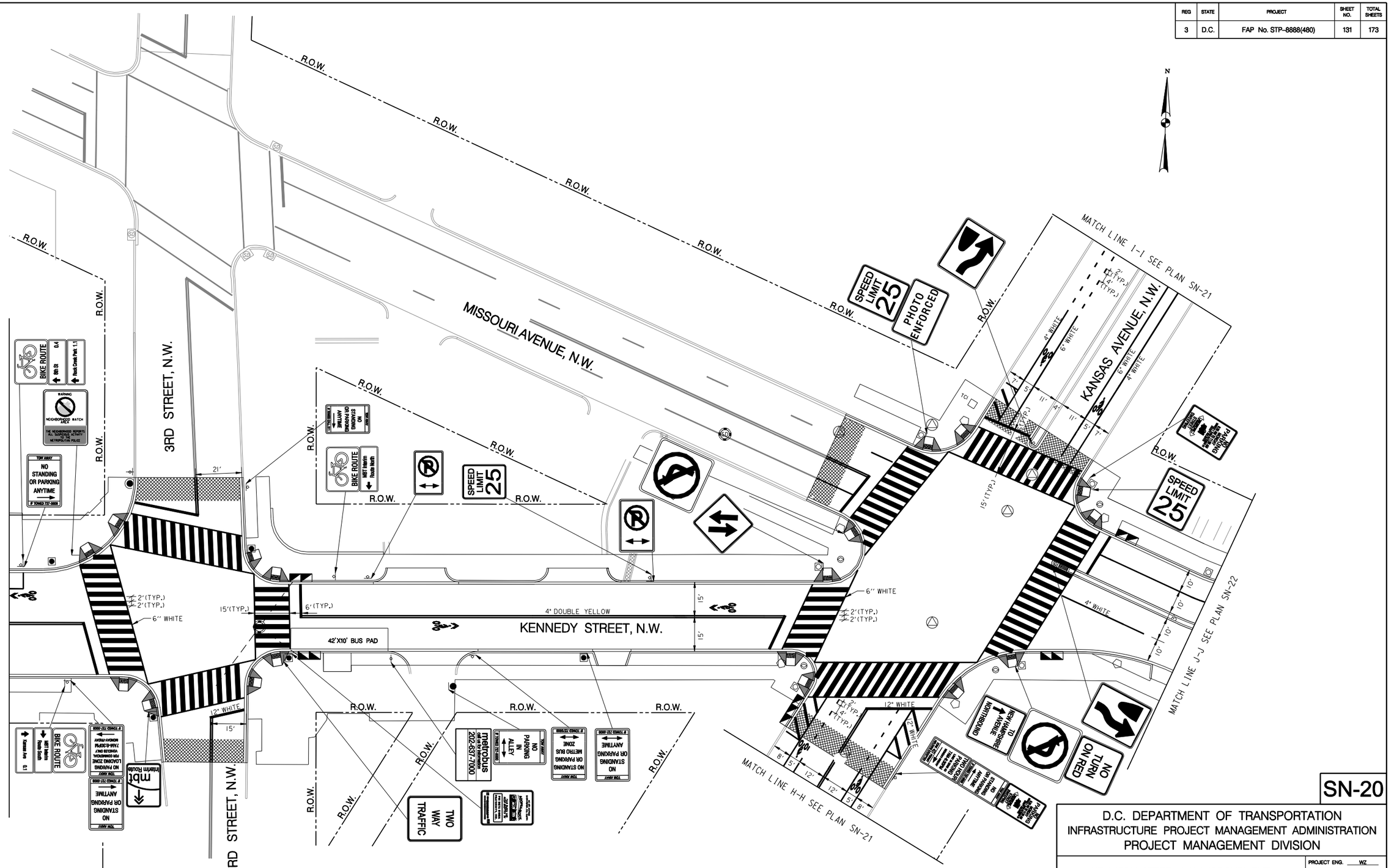

GRAPHIC SCALE

20 10 0 20 40

1" = 20'-0" HORIZ.

Precision Systems, Inc.
Engineers, Planners and Architects
WASHINGTON, D.C.

NO.	DESCRIPTION	NAME	DATE

REVISIONS

SN-20

D.C. DEPARTMENT OF TRANSPORTATION
INFRASTRUCTURE PROJECT MANAGEMENT ADMINISTRATION
PROJECT MANAGEMENT DIVISION

KENNEDY STEET, N.W. IMPROVEMENT
FROM GEORGIA AVENUE TO NORTH CAPITOL STREET

PROJECT ENG. WZ
DESIGNED BY AYY
CHECKED BY MYH
DRAWN BY WZ/YZ
PROJECT MGR. AYY

PROPOSED SIGNAGE AND
PAVEMENT MARKING PLAN – 8

DIVISION CHIEF
DATE
FILE
SHEET 131 OF 173

p:\60570\civil\plans\SN_P008_60570.dgn
Tuesday, July 28, 2015 AT 04:45 PM
$PLTDRVS$
$PENTBLS$

REG	STATE	PROJECT	SHEET NO.	TOTAL SHEETS
3	D.C.	FAP No. STP-8888(480)	132	173

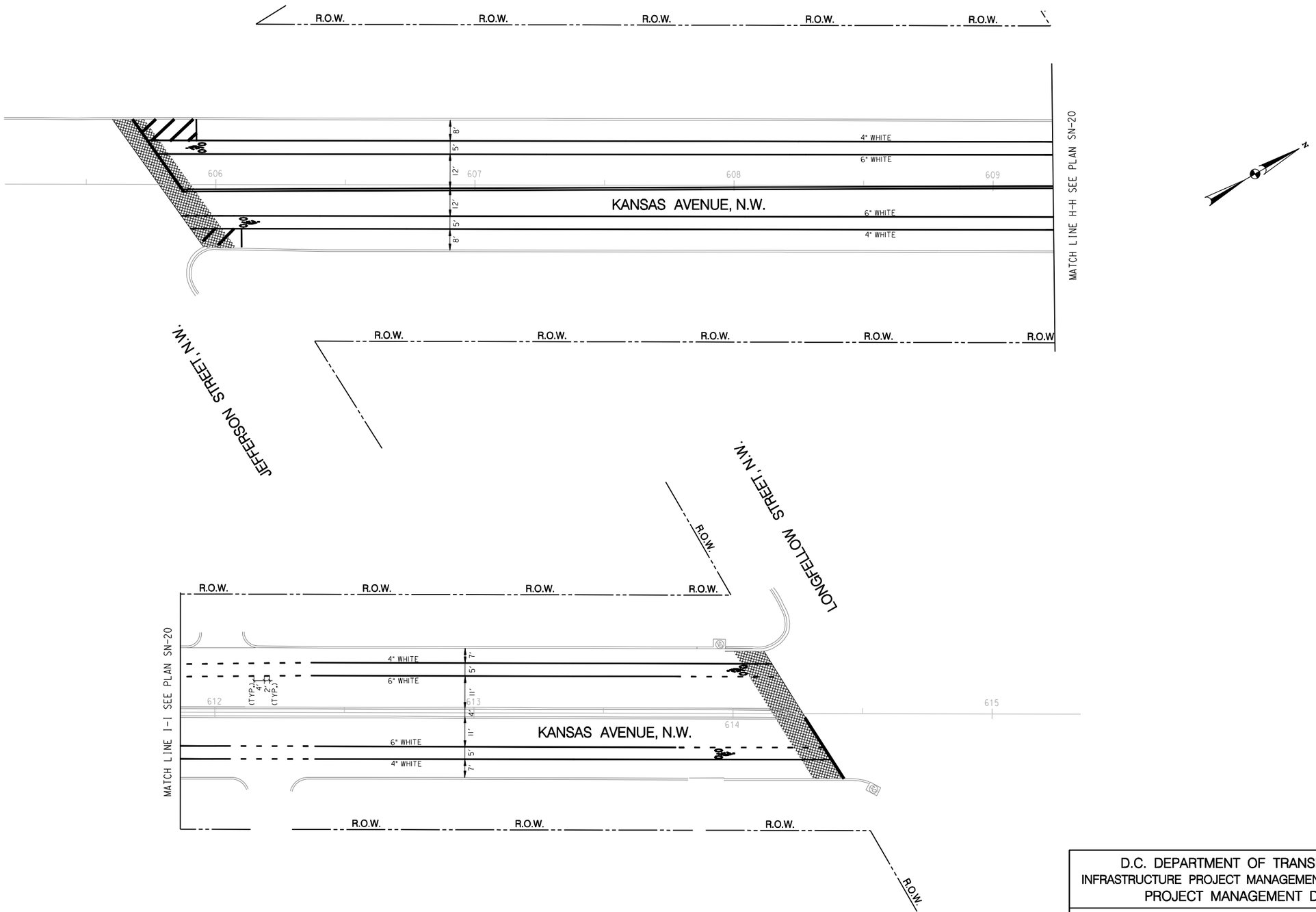

GRAPHIC SCALE

20 10 0 20 40

1" = 20'-0" HORIZ.

Precision Systems, Inc.
Engineers, Planners and Architects
WASHINGTON, D.C.

NO.	DESCRIPTION	NAME	DATE

REVISIONS

SN-21

D.C. DEPARTMENT OF TRANSPORTATION
INFRASTRUCTURE PROJECT MANAGEMENT ADMINISTRATION
PROJECT MANAGEMENT DIVISION

KENNEDY STEET, N.W. IMPROVEMENT
FROM GEORGIA AVENUE TO NORTH CAPITOL STREET

PROJECT ENG. WZ
DESIGNED BY AYY
CHECKED BY MYH
DRAWN BY WZ/YZ
PROJECT MGR. AYY

PROPOSED SIGNAGE AND
PAVEMENT MARKING PLAN – 9

DIVISION CHIEF
DATE
FILE
SHEET 132 OF 173

p:\60570\civil\plans\pSN_P009_60570.dgn
Tuesday, July 28, 2015 AT 04:45 PM
$PLTDRVS$
$PENTBLS$

REG	STATE	PROJECT	SHEET NO.	TOTAL SHEETS
3	D.C.	FAP No. STP-8888(480)	133	173

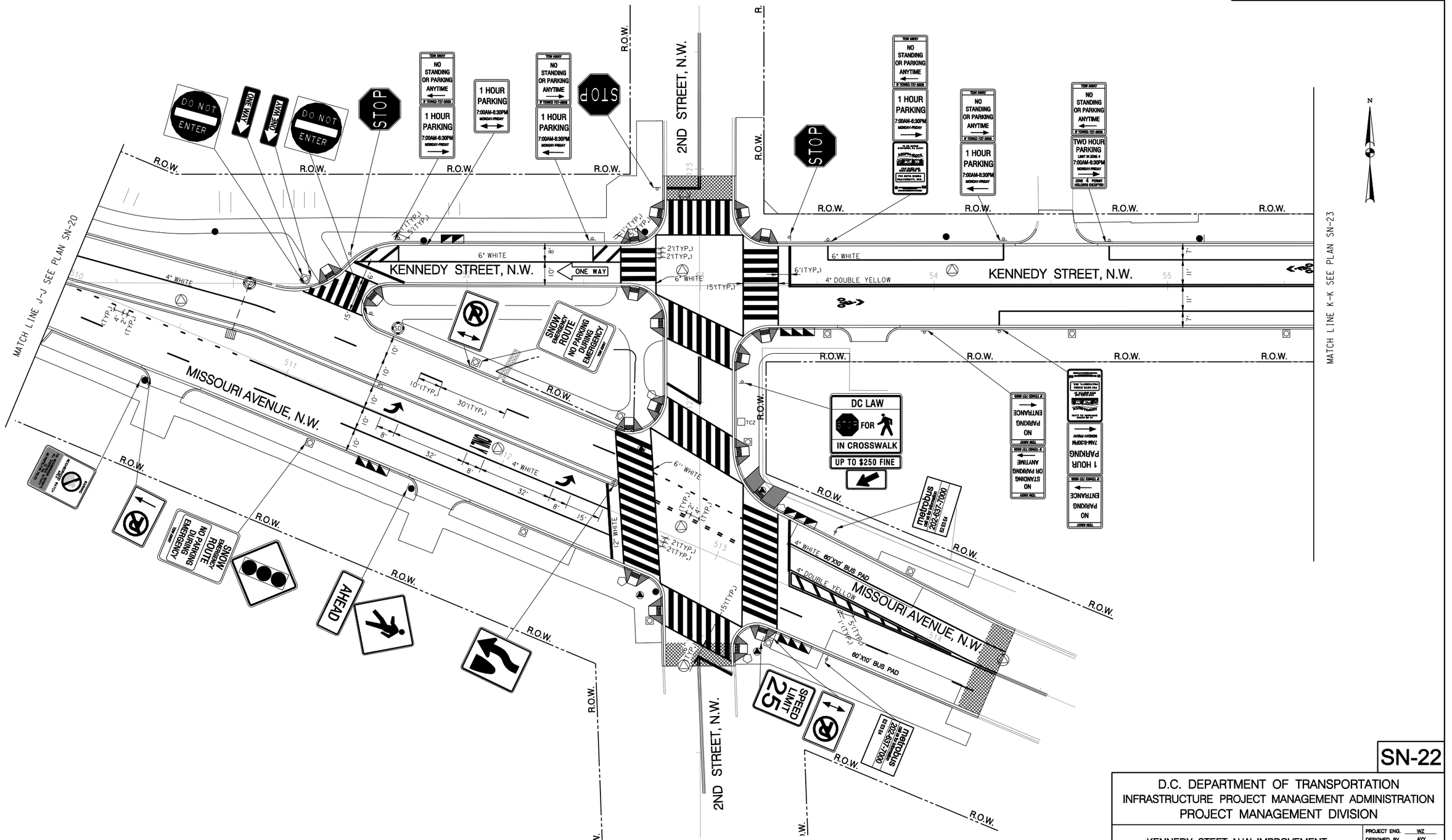

SN-22

D.C. DEPARTMENT OF TRANSPORTATION
INFRASTRUCTURE PROJECT MANAGEMENT ADMINISTRATION
PROJECT MANAGEMENT DIVISION

KENNEDY STEET, N.W. IMPROVEMENT
FROM GEORGIA AVENUE TO NORTH CAPITOL STREET

PROJECT ENG. WZ
DESIGNED BY AYY
CHECKED BY MYH
DRAWN BY WZ/YZ
PROJECT MGR. AYY

PROPOSED SIGNAGE AND
PAVEMENT MARKING PLAN – 10

DIVISION CHIEF
DATE
FILE
SHEET 133 OF 173

Precision Systems, Inc.
Engineers, Planners and Architects
WASHINGTON, D.C.

NO	DESCRIPTION	NAME	DATE
	REVISIONS		

p:\60570\civil\plans\pSN_P010_60570.dgn
Tuesday, July 28, 2015 AT 04:46 PM
$PLTDRVS$
$PENTBLS$

REG	STATE	PROJECT	SHEET NO.	TOTAL SHEETS
3	D.C.	FAP No. STP-8888(480)	134	173

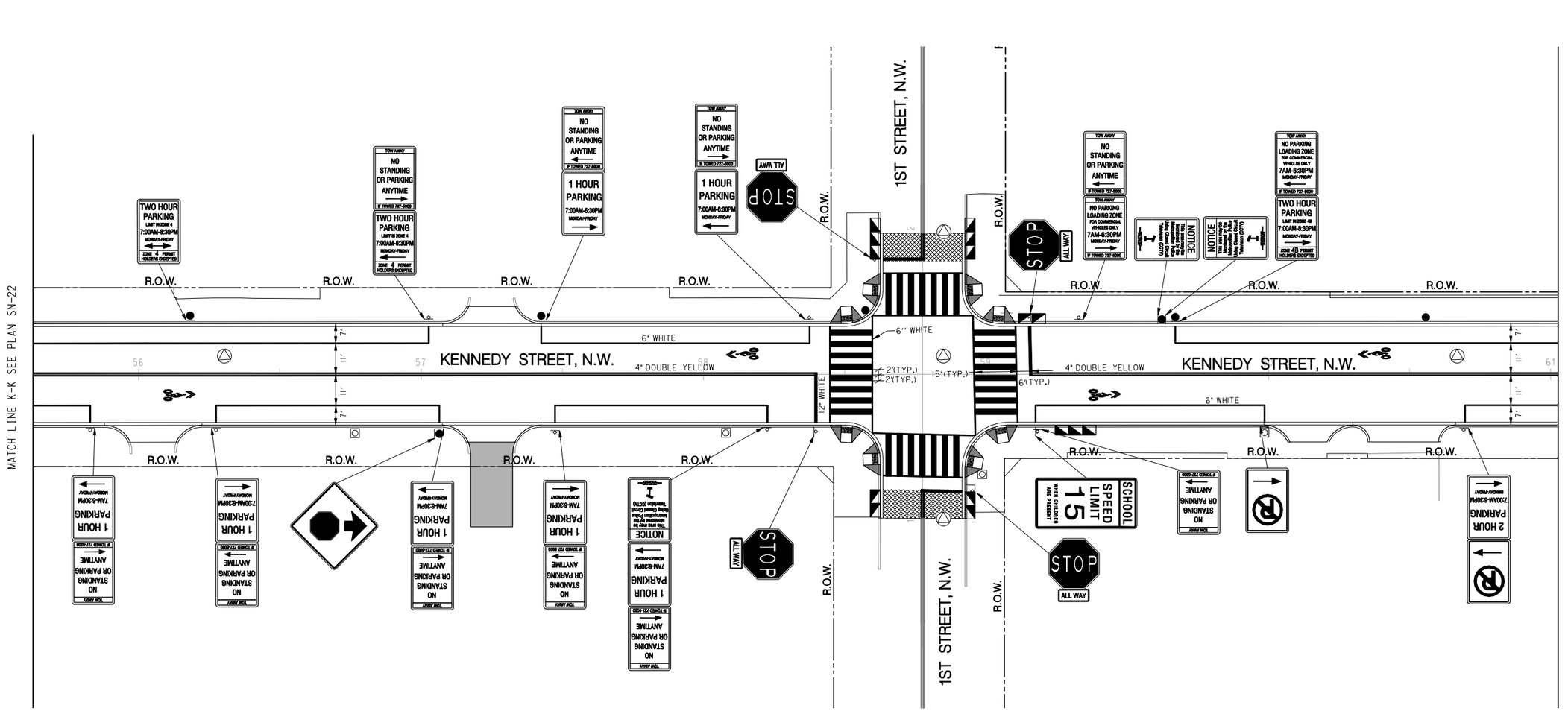

GRAPHIC SCALE

20 10 0 20 40

1" = 20'-0" HORIZ.

Precision Systems, Inc.
Engineers, Planners and Architects
WASHINGTON, D.C.

NO	DESCRIPTION	NAME	DATE

REVISIONS

SN-23

D.C. DEPARTMENT OF TRANSPORTATION
INFRASTRUCTURE PROJECT MANAGEMENT ADMINISTRATION
PROJECT MANAGEMENT DIVISION

KENNEDY STEET, N.W. IMPROVEMENT
FROM GEORGIA AVENUE TO NORTH CAPITOL STREET

PROJECT ENG. WZ
DESIGNED BY AYY
CHECKED BY MYH
DRAWN BY WZ/YZ
PROJECT MGR. AYY

PROPOSED SIGNAGE AND
PAVEMENT MARKING PLAN – 11

DIVISION CHIEF
DATE
FILE
SHEET 134 OF 173

p:\60570\civil\plans\pSN_P011_60570.dgn
Tuesday, July 28, 2015 AT 04:46 PM
$PENTBLS$
$PLTDRVS$

REG	STATE	PROJECT	SHEET NO.	TOTAL SHEETS
3	D.C.	FAP No. STP-8888(480)	135	173

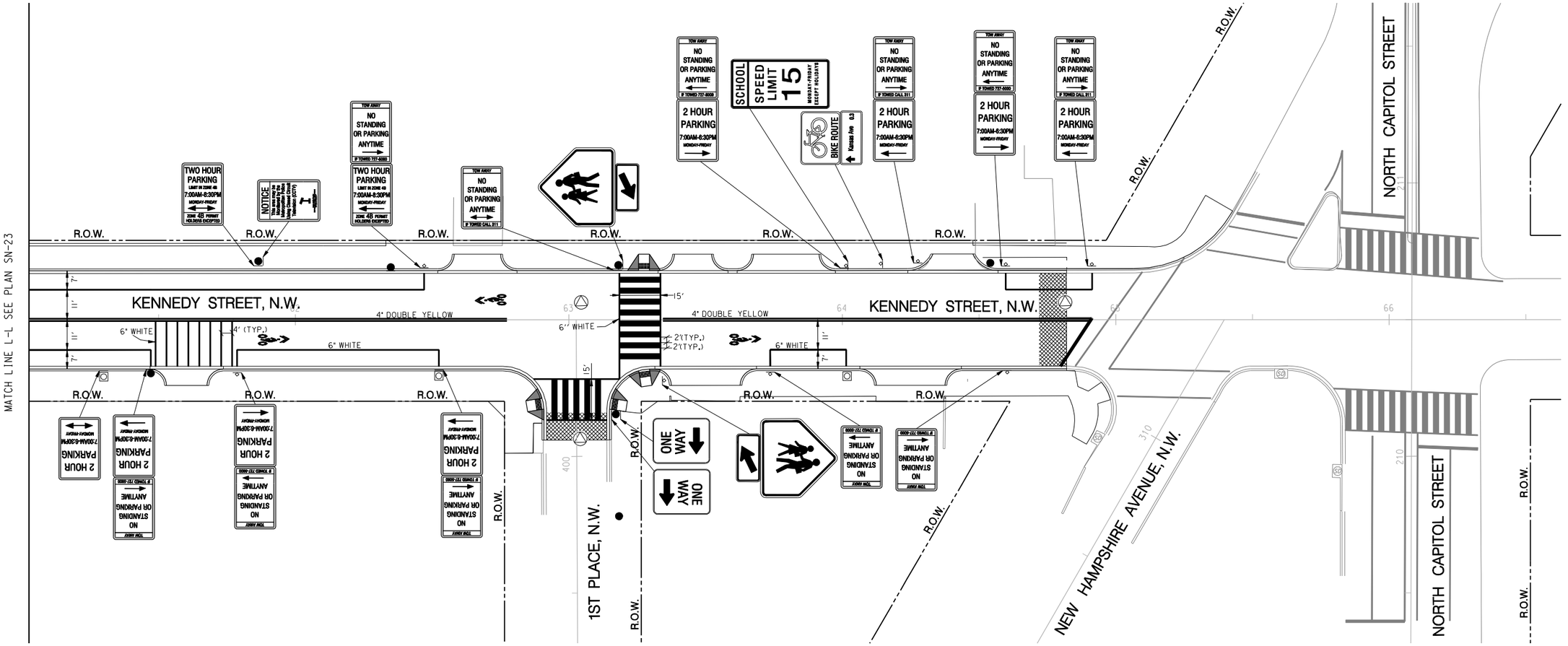

GRAPHIC SCALE

20 10 0 20 40

1" = 20'-0" HORIZ.

Precision Systems, Inc.
Engineers, Planners and Architects
WASHINGTON, D.C.

NO	DESCRIPTION	NAME	DATE

REVISIONS

SN-24

D.C. DEPARTMENT OF TRANSPORTATION
INFRASTRUCTURE PROJECT MANAGEMENT ADMINISTRATION
PROJECT MANAGEMENT DIVISION

KENNEDY STEET, N.W. IMPROVEMENT
FROM GEORGIA AVENUE TO NORTH CAPITOL STREET

PROJECT ENG. WZ
DESIGNED BY AYY
CHECKED BY MYH
DRAWN BY WZ/YZ
PROJECT MGR. AYY

PROPOSED SIGNAGE AND
PAVEMENT MARKING – 12

DIVISION CHIEF
DATE
FILE
SHEET 135 OF 173

p:\60570\civil\plans\pSN_P012_60570.dgn
Tuesday, July 28, 2015 AT 04:46 PM
$PENTBLS$
$PLTDRVS$

REG	STATE	PROJECT	SHEET NO.	TOTAL SHEETS
3	D.C.	FAP No. STP-8888(480)	136	173

R7-1a
18"x12"
(Quantity: 22)

R7-1b
18"x12"
(Quantity: 23)

R7-1c
18"x12"
(Quantity: 3)

R7-2a
18"x12"
(Quantity: 13)

R7-2b
18"x12"
(Quantity: 13)

R7-2c
18"x12"
(Quantity: 3)

R7-2d
18"x12"
(Quantity: 1)

R7-3a
18"x12"
(Quantity: 5)

R7-3b
18"x12"
(Quantity: 5)

R7-3c
18"x12"
(Quantity: 1)

R7-3e
18"x12"
(Quantity: 21)

R7-5a
18"x12"
(Quantity: 10)

R7-5b
18"x12"
(Quantity: 10)

R7-5c
18"x12"
(Quantity: 2)

R7-5d
18"x12"
(Quantity: 2)

R7-5e
18"x12"
(Quantity: 2)

R7-5f
18"x12"
(Quantity: 1)

R7-5g
18"x12"
(Quantity: 1)

R7-5h
18"x12"
(Quantity: 3)

R7-5i
18"x12"
(Quantity: 1)

R7-5j
18"x12"
(Quantity: 4)

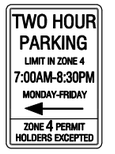

R7-5k
18"x12"
(Quantity: 1)

R7-5l
18"x12"
(Quantity: 1)

R7-5m
18"x12"
(Quantity: 1)

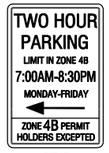

R7-5n
18"x12"
(Quantity: 1)

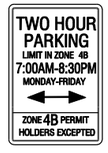

R7-5o
18"x12"
(Quantity: 1)

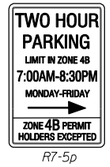

R7-5p
18"x12"
(Quantity: 1)

R7-5q
18"x12"
(Quantity: 5)

R7-5r
18"x12"
(Quantity: 1)

R7-5s
18"x12"
(Quantity: 6)

R7-5t
18"x12"
(Quantity: 1)

R7-5u
18"x12"
(Quantity: 1)

R7-5v
18"x12"
(Quantity: 1)

R7-5w
18"x12"
(Quantity: 1)

R7-5x
18"x12"
(Quantity: 1)

R7-6a
18"x12"
(Quantity: 2)

R7-6b
18"x12"
(Quantity: 2)

R7-6c
18"x12"
(Quantity: 1)

R7-6d
18"x12"
(Quantity: 1)

R7-6e
18"x12"
(Quantity: 1)

R7-6f
18"x12"
(Quantity: 1)

R7-7g
18"x12"
(Quantity: 8)

R7-7h
18"x12"
(Quantity: 1)

R7-7l
18"x12"
(Quantity: 5)

R7-8a
18"x12"
(Quantity: 2)

R7-8b
18"x12"
(Quantity: 2)

R7-8c
18"x12"
(Quantity: 1)

18"x12"
(Quantity: 2)

R10-4a
18"x12"
(Quantity: 9)

18"x12"
(Quantity: 2)

18"x30"
(Quantity: 3)

R7-203a
18"x24"
(Quantity: 3)

12"x16"
(Quantity: 1)

W4-4P
36"x18"
(Quantity: 2)

SN-25

D.C. DEPARTMENT OF TRANSPORTATION
INFRASTRUCTURE PROJECT MANAGEMENT ADMINISTRATION
PROJECT MANAGEMENT DIVISION

KENNEDY STEET, N.W. IMPROVEMENT
FROM GEORGIA AVENUE TO NORTH CAPITOL STREET

PROJECT ENG. WZ
DESIGNED BY AYY
CHECKED BY MYH
DRAWN BY WZ/YZ
PROJECT MGR. AYY

PROPOSED SIGN SCHEDULE – 1

DIVISION CHIEF
DATE
FILE
SHEET 136 OF 173

Precision Systems, Inc.
Engineers, Planners and Architects
WASHINGTON, D.C.

NO	DESCRIPTION	NAME	DATE

REVISIONS

p:\60570\civil\plans\pSN_P013_60570.dgn $PENTBLS$ $PLTDRVS$
Tuesday, July 28, 2015 AT 04:47 PM

REG	STATE	PROJECT	SHEET NO.	TOTAL SHEETS
3	D.C.	FAP No. STP-8888(480)	137	173

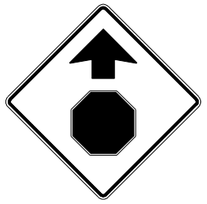

W3-1
36"x36"
(Quantity: 4)

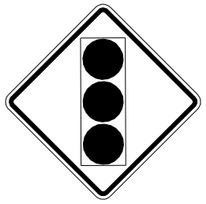

W3-3
36"x36"
(Quantity: 1)

R6-1L
24"x30"
(Quantity: 1)

R6-1L
24"x30"
(Quantity: 1)

R6-1L
12"x36"
(Quantity: 3)

R6-1L
12"x36"
(Quantity: 2)

W3-1
36"x36"
(Quantity: 1)

R4-7
24"x30"
(Quantity: 3)

R6-3
30"x30"
(Quantity: 1)

R6-4
12"x18"
(Quantity: 1)

R3-2
24" x 24"
(Quantity: 2)

R10-11a
24"x24"
(Quantity: 1)

R2-1
24"x30"
(Quantity: 13)

R5-1
36"x36"
(Quantity: 5)

R1-1
36"x36"
(Quantity: 21)

W16-10
24"x18"
(Quantity: 1)

12"x18"
(Quantity: 1)

6"x18"
(Quantity: 1)

R7-201a
6"x12"
(Quantity: 1)

6"x12"
(Quantity: 1)

S5-1a
24"x48"
(Quantity: 1)

S5-1b
24"x48"
(Quantity: 1)

W11-2a
36"x36"
(Quantity: 1)

S1-1
36"x36"
(Quantity: 2)

R1-6a(1)
36"x12"
(Quantity: 4)

R1-5
36"x36"
(Quantity: 5)

(by other)
(Quantity: 1)

(by other)
(Quantity: 2)

(by other)
(Quantity: 9)

W11-2a
36"x12"
(Quantity: 1)

W16-7P
24"x12"
(Quantity: 7)

R1-4
6"x12"
(Quantity: 8)

W16-9P
24"x12"
(Quantity: 1)

D11-1
24"x18"
(Quantity: 8)

D1-1a
6"x18"
(Quantity: 1)

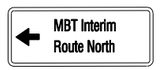

D1-1b
6"x18"
(Quantity: 1)

D1-1c
6"x18"
(Quantity: 1)

D1-1d
6"x18"
(Quantity: 1)

D1-1e
6"x18"
(Quantity: 1)

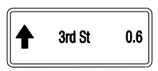

D1-1f
6"x18"
(Quantity: 1)

D1-1g
6"x18"
(Quantity: 1)

D1-1h
6"x18"
(Quantity: 1)

D1-1i
6"x18"
(Quantity: 1)

D1-1j
6"x18"
(Quantity: 1)

D1-1k
6"x18"
(Quantity: 1)

D1-1l
6"x18"
(Quantity: 1)

SN-26

D.C. DEPARTMENT OF TRANSPORTATION
INFRASTRUCTURE PROJECT MANAGEMENT ADMINISTRATION
PROJECT MANAGEMENT DIVISION

KENNEDY STEET, N.W. IMPROVEMENT
FROM GEORGIA AVENUE TO NORTH CAPITOL STREET

PROJECT ENG. WZ
DESIGNED BY AYY
CHECKED BY MYH
DRAWN BY WZ/YZ
PROJECT MGR. AYY

PROPOSED SIGN SCHEDULE – 2

DIVISION CHIEF
DATE
FILE
SHEET 137 OF 173

Precision Systems, Inc.
Engineers, Planners and Architects
WASHINGTON, D.C.

NO.	DESCRIPTION	NAME	DATE

REVISIONS

$PENTBLS$
$PLTDRVS$
p:\60570\civil\plans\pSN_P014_60570.dgn
Tuesday, July 28, 2015 AT 04:47 PM

REG	STATE	PROJECT	SHEET NO.	TOTAL SHEETS
3	D.C.	FAP No. STP-8888(480)	138	173

GENERAL NOTES:

1. THE LOCATION OF THE UTILITIES SHOWN ON THESE PLANS ARE BASED ON FIELD OBSERVATION AND/OR RECORD DRAWINGS.THE INFORMATION SHOWN IS NOT NECESSARILY COMPLETE AND THE LOCATION OF THE UTILITIES SHOWN IS APPROXIMATE. THE CONTRACTOR WILL VERIFY THE EXISTENCE OF ALL UTILITIES IN ADVANCE OF CONDUCTING CONSTRUCTION OPERATIONS THAT COULD DAMAGE THESE UTILITIES.

2. IN THE AREAS WHERE PROPOSED CONSTRUCTION MAY CONFLICT WITH EXISTING UTILITIES, THE CONTRACTOR WILL TAKE ALL NECESSARY PRECAUTIONS TO AVOID DAMAGE TO THESE UTILITIES.

3. IF AN UNDERGROUND UTILITY IS DAMAGED, THE CONTRACTOR WILL IMMEDIATELY NOTIFY THE DISTRICT AND THE OWNER OF THE UTILITY. ANY DAMAGE SUSTAINED TO UTILITIES ABOVE OR BELOW GROUND WILL BE REPAIRED BY THE CONTRACTOR UNDER THE DIRECTION OF THE UTILITY OWNER AT THE CONTRACTOR'S EXPENSE. UNDER NO CIRCUMSTANCE WILL THE CONTRACTOR BACKFILL AN EXCAVATION AFFECTING SAID UTILITY WITHOUT FIRST RECEIVING PERMISSION FROM THE UTILITY OWNER.

4. THE CONTRACTOR WILL NOTIFY THE FOLLOWING PARTIES AT LEAST FORTY EIGHT (48) HOURS, BUT NOT MORE THAN TEN (10) WORKING DAYS IN ADVANCE OF PROCEEDING WITH ANY EXCAVATION WORK:

TYPE OF WORK	NOTIFY AGENCIES
GAS, TELEPHONE, ELECTRICAL,CONDUIT & CABLE TV	MISS UTILITY (800-257-7777)
WATER MAIN & SEWERS	DC WATER (202-673-6600)

5. ALL EXISTING STREETLIGHT CONDUITS TO BE ABANDONED WILL BE SEALED WITH CONCRETE BEFORE INSTALLING THE NEW FOUNDATION OR BACKFILLING. REMOVE THE CONCRETE FOUNDATION COMPLETELY, SUCH AS ANCHOR BOLTS, CONDUITS, CABLE AND ALL OTHER ASSOCIATED DEVICES.

6. WHERE A STREETLIGHT IS REPLACED IN THE SAME LOCATION THE LIGHT WILL BE RESTORED WITHIN 5 WORKING DAYS. ALL LIGHTS WITHIN THE PROJECT LIMIT IS THE CONTRACTOR'S RESPONSIBILITY TO REPAIR IN A TIMELY MANNER (WITHIN FORTY-EIGHT HOURS) FROM NTP UNTIL THE PROJECT IS ACCEPTED BY THE DISTRICT.

7. THE CONTRACTOR WILL KEEP PROPER RECORD OF ALL TRAFFIC AND PARKING SIGNS THAT WILL BE REMOVED PRIOR TO REMOVING THE STREETLIGHT POLE. THE SIGNS SHALL BE RELOCATAED TO THE NEW POLE AT THE SAME HEIGHT AND ORIENTATION. A U-POLE SHALL BE INSTALLED TO MOUNT THE REPLACED SIGN IF A PROPOSED NEW POLE HAS A DIFFERENT LOCATION.

8. ALL POLE FOUNDATIONS WILL BE INSTALLED 3' FROM FACE OF CURB TO CENTER OF FOUNDATION UNLESS NOTED ON THE PLANS OR DIRECTED BY THE ENGINEER.

9. THE CONTRACTOR SHALL BE RESPONSIBLE TO FIELD CHECK FOR ALL EXISTING LOCATIONS AND MAKE NECESSARY ADJUSTMENTS TO ACCOMMODATE THE NEW WORK AT NO ADDITIONAL COST TO THE DISTRICT OF COLUMBIA GOVERNMENT.

10. CONTRACTOR SHALL EXERCISE CAUTION WHEN CONSTRUCTING A POLE FOUNDATION AND PLANTING A TREE TO AVOID DAMAGE TO EXISTING DC WATER FACILITIES. EXCAVATE TEST PIT TO EXPOSE DC WTATER FACILITIES; SHEET AND SHORE AS NECESSARY. NO ADDITIONAL PAYMENT SHALL BE MADE FOR SHEETING AND SHORING OR OTHER METHODS TO PREVENT DAMAGE TO DC WATER FACILITIES.

11. CONTRACTOR SHALL EXERCISE CAUTION WHEN CONSTRUCTING ELECTRICAL MANHOLE TO AVOID DAMAGE TO EXISTING DC WATER FACILITIES. EXCAVATE TEST PIT TO EXPOSE DC WATER FACILITIES: SHEET AND SHORE AS NECESSARY. NO ADDITIONAL PAYMENT SHALL BE MADE FOR SHEETING AND SHORING OR OTHER METHODS USED TO PREVENT DAMAGE TO DC WATER FACILITIES.

LEGEND:

- EXISTING 28-FOOT PENDANT POST STREETLIGHT POLE WITH LUMINAIRE TO BE REMOVED
- EXISTING 28-FOOT PENDANT POST STREETLIGHT POLE WITH LUMINAIRE TO REMAIN
- EXISTING WOOD POLE
- EXISTING WOOD POLE WITH LUMINAIRE TO BE REMOVED
- EXISTING WOOD POLE WITH LUMINAIRE TO REMAIN
- EXISTING NO. 16 STREETLIGHT POLE TO REMAIN
- EXISTING HISTORICAL STREETCAR CATENARY POLE
- PROPOSED 28-FOOT PENDANT POST STREETLIGHT POLE WITH LUMINAIRE
- PROPOSED LOCATION FOR PEPCO POWER CONNECTION
- EXISTING LUMINAIRE AND SUPPORT ARM INDICATING DIRECTION OF LIGHT TO BE REMOVED
- PROPOSED LUMINAIRE AND SUPPORT ARM INDICATING DIRECTION OF LIGHT
- PROPOSED WHEELCHAIR RAMP
- EXISTING DDOT MANHOLE
- PROPOSED DDOT MANHOLE (3'X3'X3')
- PROPOSED DDOT MANHOLE (4'X4'X4')
- EXISTING DDOT ELECTRICAL CONDUIT
- PROPOSED DDOT 1-2" ELECTRICAL PVC CONDUIT
- PROPOSED DDOT 1-2" & 1-4" ELECTRICAL PVC CONDUIT
- PROPOSED DDOT 2-4" ELECTRICAL PVC CONDUIT
- PROPOSED DDOT 4-4" ELECTRICAL PVC CONDUIT
- PROPOSED DDOT 6-4" ELECTRICAL PVC CONDUIT
- EXISTING TREE
- PROPOSED TREE

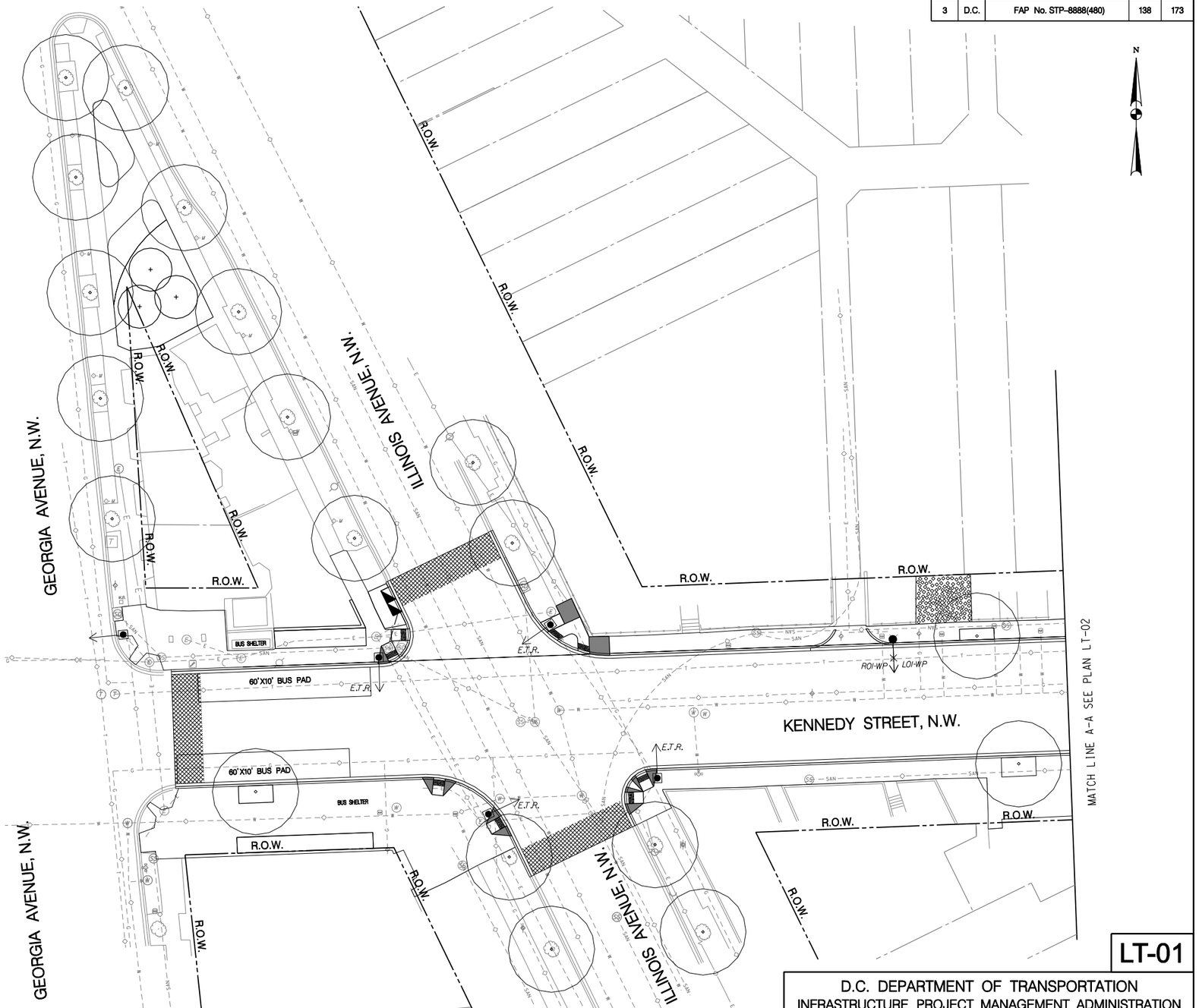

GRAPHIC SCALE

20 10 0 20 40

1" = 20'-0" HORIZ.

Precision Systems, Inc.
Engineers, Planners and Architects
WASHINGTON, D.C.

NO	DESCRIPTION	NAME	DATE

REVISIONS

LT-01

D.C. DEPARTMENT OF TRANSPORTATION
INFRASTRUCTURE PROJECT MANAGEMENT ADMINISTRATION
PROJECT MANAGEMENT DIVISION

KENNEDY STEET, N.W. IMPROVEMENT
FROM GEORGIA AVENUE TO NORTH CAPITOL STREET

PROJECT ENG.	WZ
DESIGNED BY	AYY
CHECKED BY	MYH
DRAWN BY	WZ/YZ
PROJECT MGR.	AYY

STREET LIGHTING PLAN – 1

DIVISION CHIEF

DATE

FILE

SHEET 138 OF 173

$PENTBLS$
$PLTDRVS$
p:\60570\lighting\plans\pLT_P001_60570.dgn
Tuesday, July 28, 2015 AT 04:48 PM

REG	STATE	PROJECT	SHEET NO.	TOTAL SHEETS
3	D.C.	FAP No. STP-8888(480)	139	173

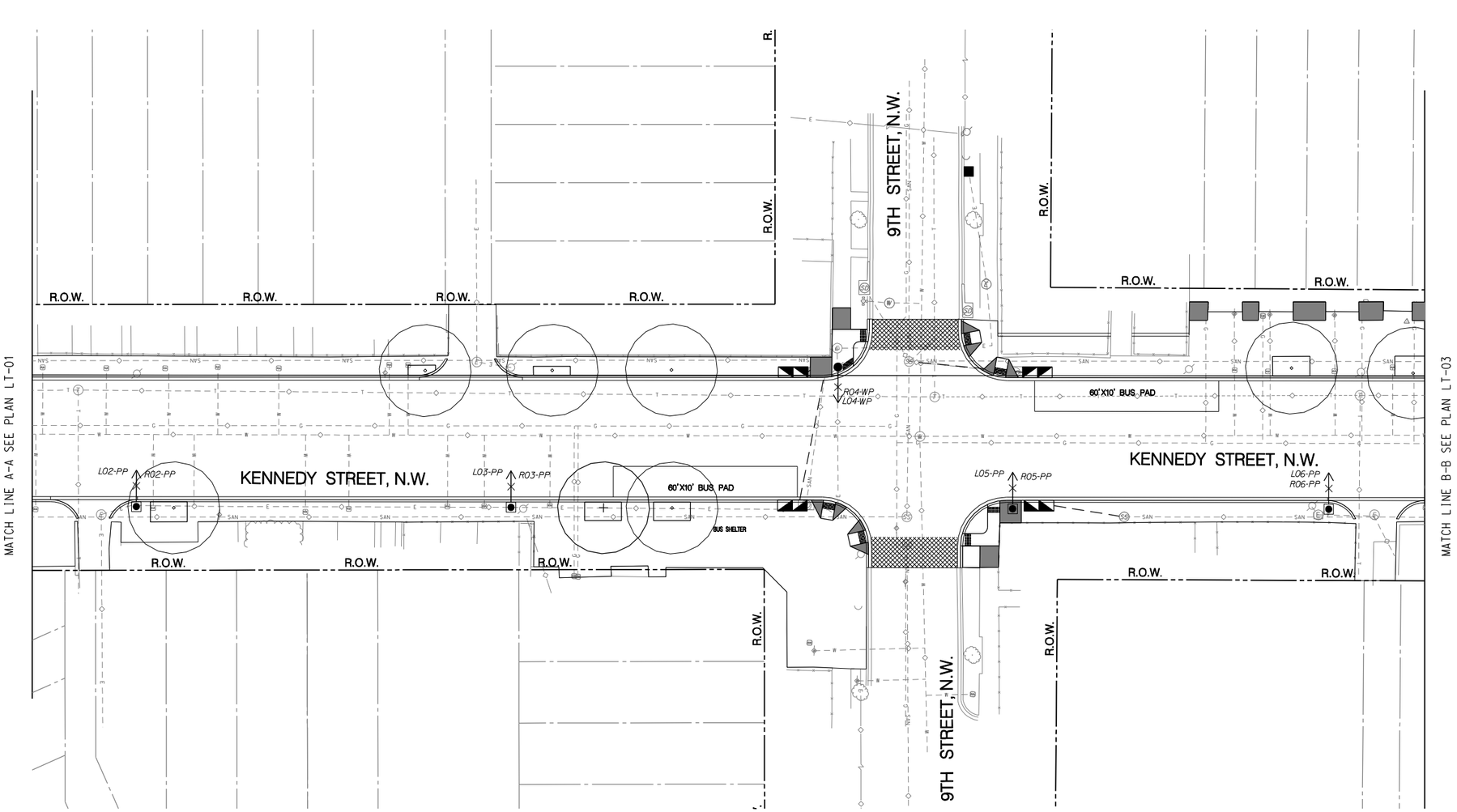

GRAPHIC SCALE

20 10 0 20 40

1" = 20'-0" HORIZ.

Precision Systems, Inc.
Engineers, Planners and Architects
WASHINGTON, D.C.

NO.	DESCRIPTION	NAME	DATE

REVISIONS

LT-02

D.C. DEPARTMENT OF TRANSPORTATION
INFRASTRUCTURE PROJECT MANAGEMENT ADMINISTRATION
PROJECT MANAGEMENT DIVISION

KENNEDY STEET, N.W. IMPROVEMENT
FROM GEORGIA AVENUE TO NORTH CAPITOL STREET

PROJECT ENG. WZ
DESIGNED BY AYY
CHECKED BY MYH
DRAWN BY WZ/YZ
PROJECT MGR. AYY

STREET LIGHTING PLAN – 2

DIVISION CHIEF
DATE
FILE
SHEET 139 OF 173

p:\60570\lighting\plans\pLT_P002_60570.dgn
Tuesday, July 28, 2015 AT 04:49 PM
$PENTBL$
$PLTDRV$

REG	STATE	PROJECT	SHEET NO.	TOTAL SHEETS
3	D.C.	FAP No. STP-8888(480)	140	173

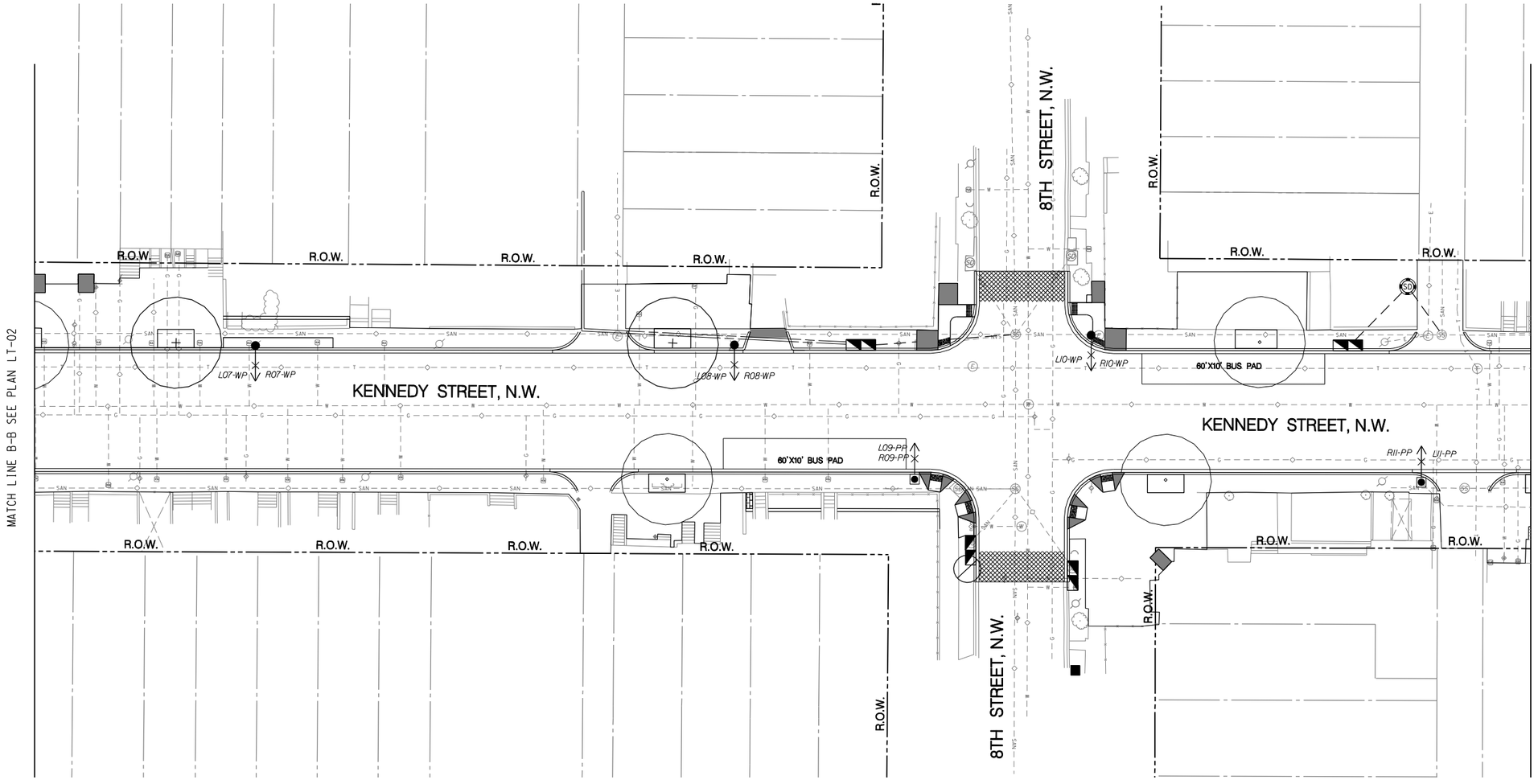

GRAPHIC SCALE

20 10 0 20 40

1" = 20'-0" HORIZ.

Precision Systems, Inc.
Engineers, Planners and Architects
WASHINGTON, D.C.

NO.	DESCRIPTION	NAME	DATE

REVISIONS

LT-03

D.C. DEPARTMENT OF TRANSPORTATION
INFRASTRUCTURE PROJECT MANAGEMENT ADMINISTRATION
PROJECT MANAGEMENT DIVISION

KENNEDY STEET, N.W. IMPROVEMENT
FROM GEORGIA AVENUE TO NORTH CAPITOL STREET

PROJECT ENG. WZ
DESIGNED BY AYY
CHECKED BY MYH
DRAWN BY WZ/YZ
PROJECT MGR. AYY

STREET LIGHTING PLAN – 3

DIVISION CHIEF

DATE

FILE

SHEET 140 OF 173

p:\60570\lighting\plans\pLT_P003_60570.dgn
Tuesday, July 28, 2015 AT 04:49 PM
$PLTDRVS$
$PENTBLS$

REG	STATE	PROJECT	SHEET NO.	TOTAL SHEETS
3	D.C.	FAP No. STP-8888(480)	141	173

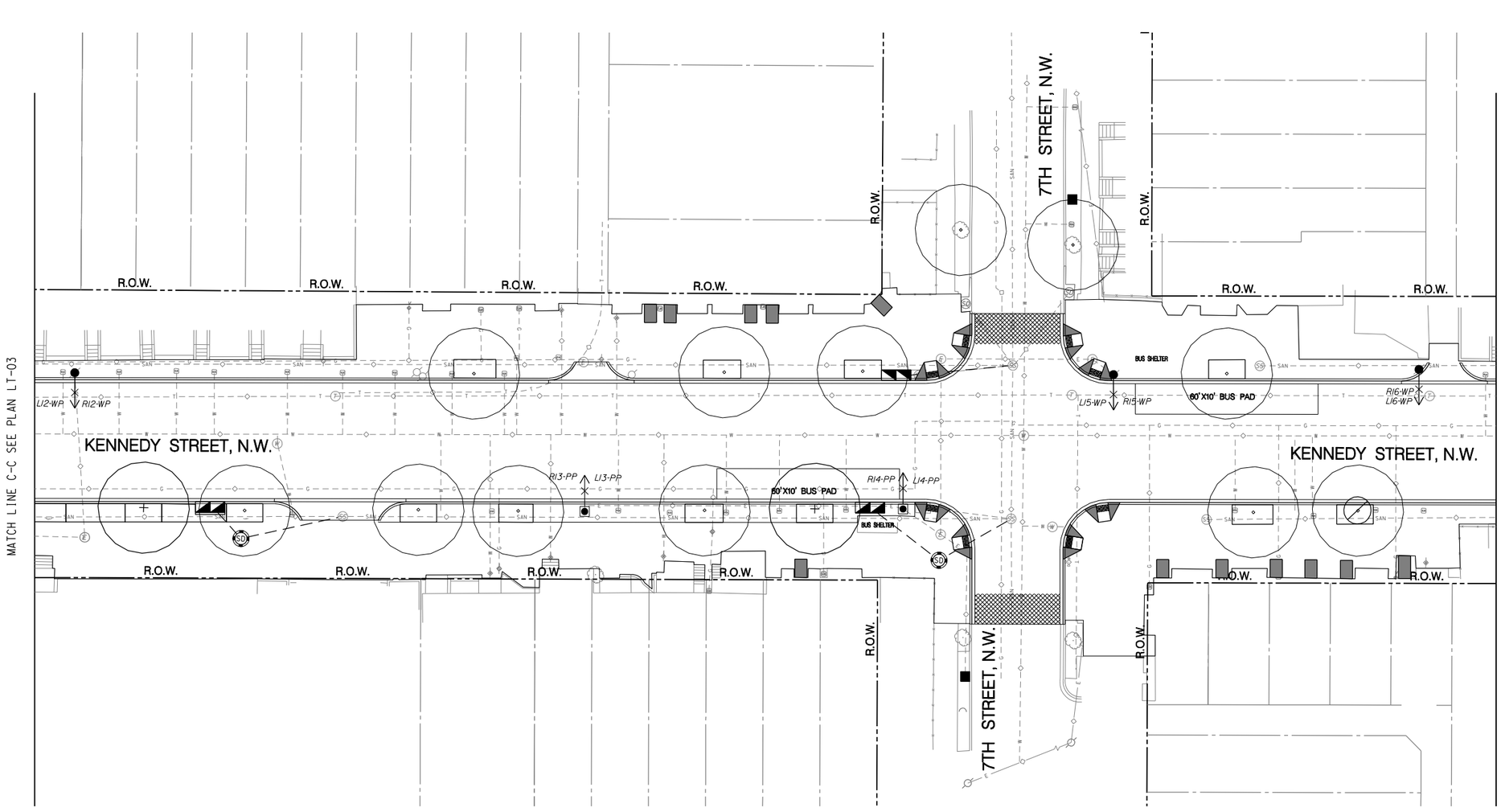

GRAPHIC SCALE

20 10 0 20 40

1" = 20'-0" HORIZ.

Precision Systems, Inc.
Engineers, Planners and Architects
WASHINGTON, D.C.

NO.	DESCRIPTION	NAME	DATE

REVISIONS

LT-04

D.C. DEPARTMENT OF TRANSPORTATION
INFRASTRUCTURE PROJECT MANAGEMENT ADMINISTRATION
PROJECT MANAGEMENT DIVISION

KENNEDY STEET, N.W. IMPROVEMENT
FROM GEORGIA AVENUE TO NORTH CAPITOL STREET

PROJECT ENG. WZ
DESIGNED BY AYY
CHECKED BY MYH
DRAWN BY WZ/YZ
PROJECT MGR. AYY

STREET LIGHTING PLAN – 4

DIVISION CHIEF
DATE
FILE
SHEET 141 OF 173

p:\60570\lighting\plans\pLT_P004_60570.dgn
Tuesday, July 28, 2015 AT 04:49 PM
$PLTDRVS$
$PENTBLS$

REG	STATE	PROJECT	SHEET NO.	TOTAL SHEETS
3	D.C.	FAP No. STP-8888(480)	142	173

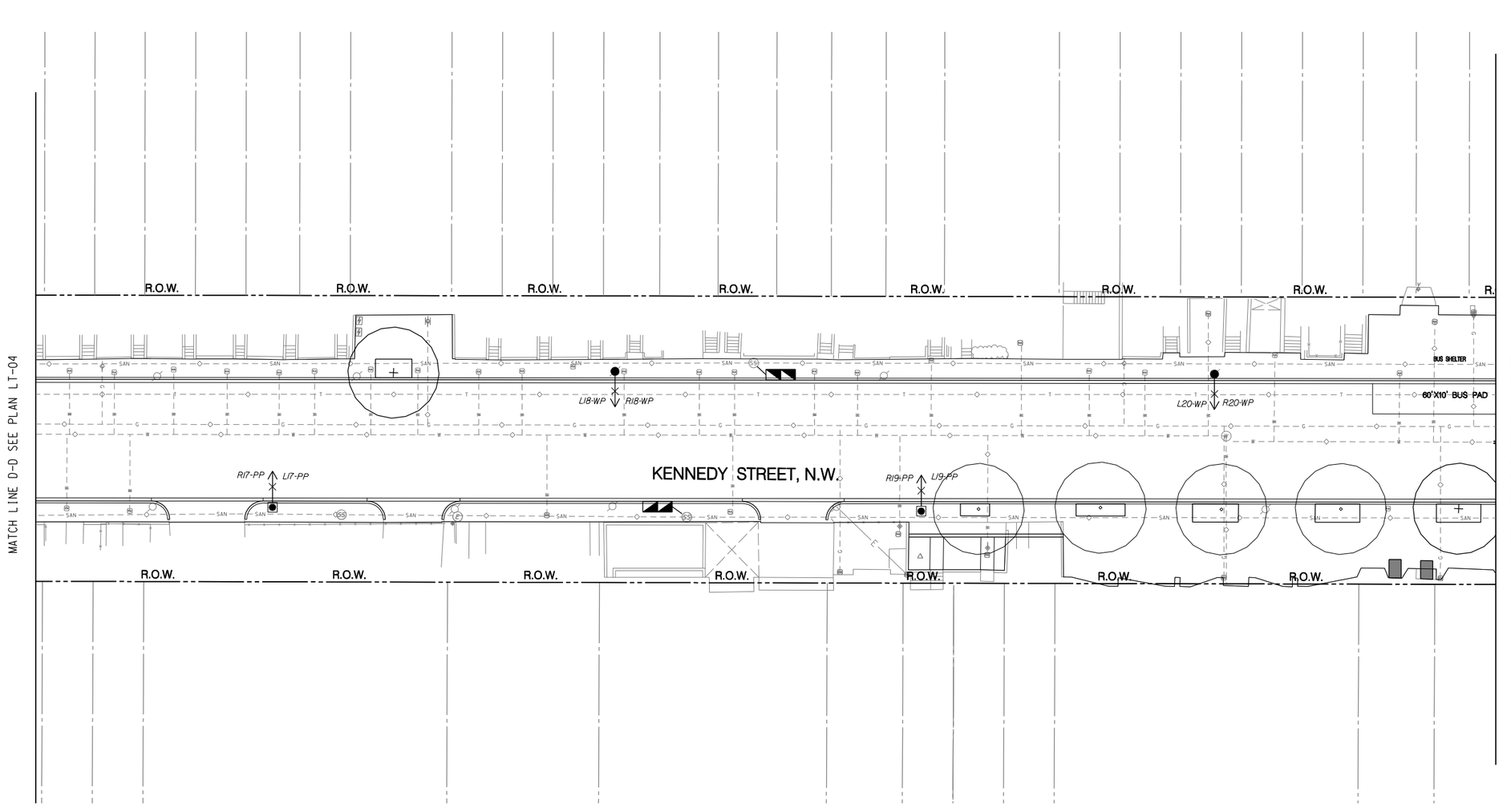

GRAPHIC SCALE

20 10 0 20 40

1" = 20'-0" HORIZ.

Precision Systems, Inc.
Engineers, Planners and Architects
WASHINGTON, D.C.

NO.	DESCRIPTION	NAME	DATE

REVISIONS

LT-05

D.C. DEPARTMENT OF TRANSPORTATION
INFRASTRUCTURE PROJECT MANAGEMENT ADMINISTRATION
PROJECT MANAGEMENT DIVISION

KENNEDY STEET, N.W. IMPROVEMENT
FROM GEORGIA AVENUE TO NORTH CAPITOL STREET

STREET LIGHTING PLAN – 5

PROJECT ENG. WZ
DESIGNED BY AYY
CHECKED BY MYH
DRAWN BY WZ/YZ
PROJECT MGR. AYY

DIVISION CHIEF

DATE

FILE

SHEET 142 OF 173

p:\60570\lighting\plans\pLT_P005_60570.dgn
Tuesday, July 28, 2015 AT 04:50 PM
$PENTBL$
$PLTDRVS$

REG	STATE	PROJECT	SHEET NO.	TOTAL SHEETS
3	D.C.	FAP No. STP-8888(480)	143	173

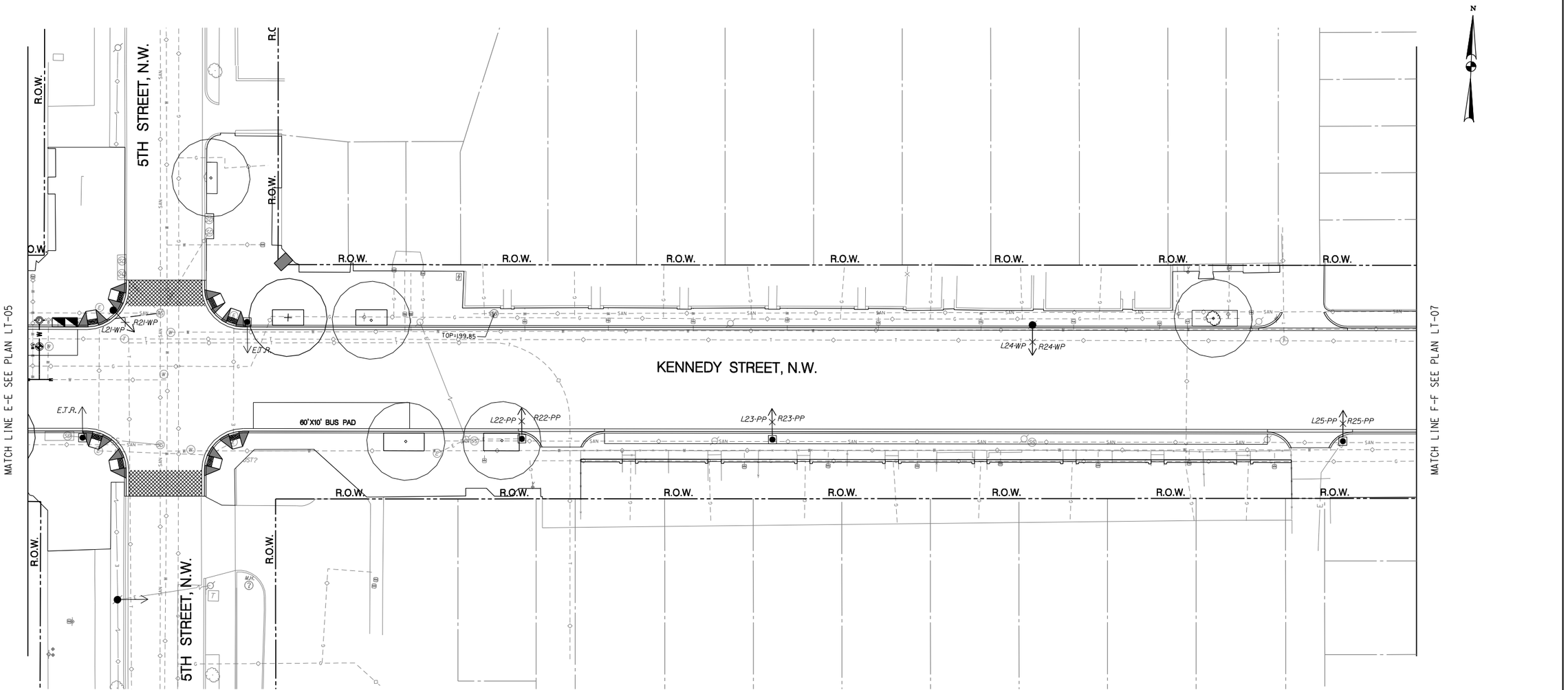

GRAPHIC SCALE

20 10 0 20 40

1" = 20'-0" HORIZ.

Precision Systems, Inc.
Engineers, Planners and Architects
WASHINGTON, D.C.

NO	DESCRIPTION	NAME	DATE

REVISIONS

LT-06

D.C. DEPARTMENT OF TRANSPORTATION
INFRASTRUCTURE PROJECT MANAGEMENT ADMINISTRATION
PROJECT MANAGEMENT DIVISION

KENNEDY STEET, N.W. IMPROVEMENT
FROM GEORGIA AVENUE TO NORTH CAPITOL STREET

PROJECT ENG. WZ
DESIGNED BY AYY
CHECKED BY MYH
DRAWN BY WZ/YZ
PROJECT MGR. AYY

STREET LIGHTING PLAN – 6

DIVISION CHIEF
DATE
FILE
SHEET 143 OF 173

p:\60570\lighting\plans\pLT_P006_60570.dgn
Tuesday, July 28, 2015 AT 04:50 PM
$PENTBL$
$PLTDRV$

REG	STATE	PROJECT	SHEET NO.	TOTAL SHEETS
3	D.C.	FAP No. STP-8888(480)	144	173

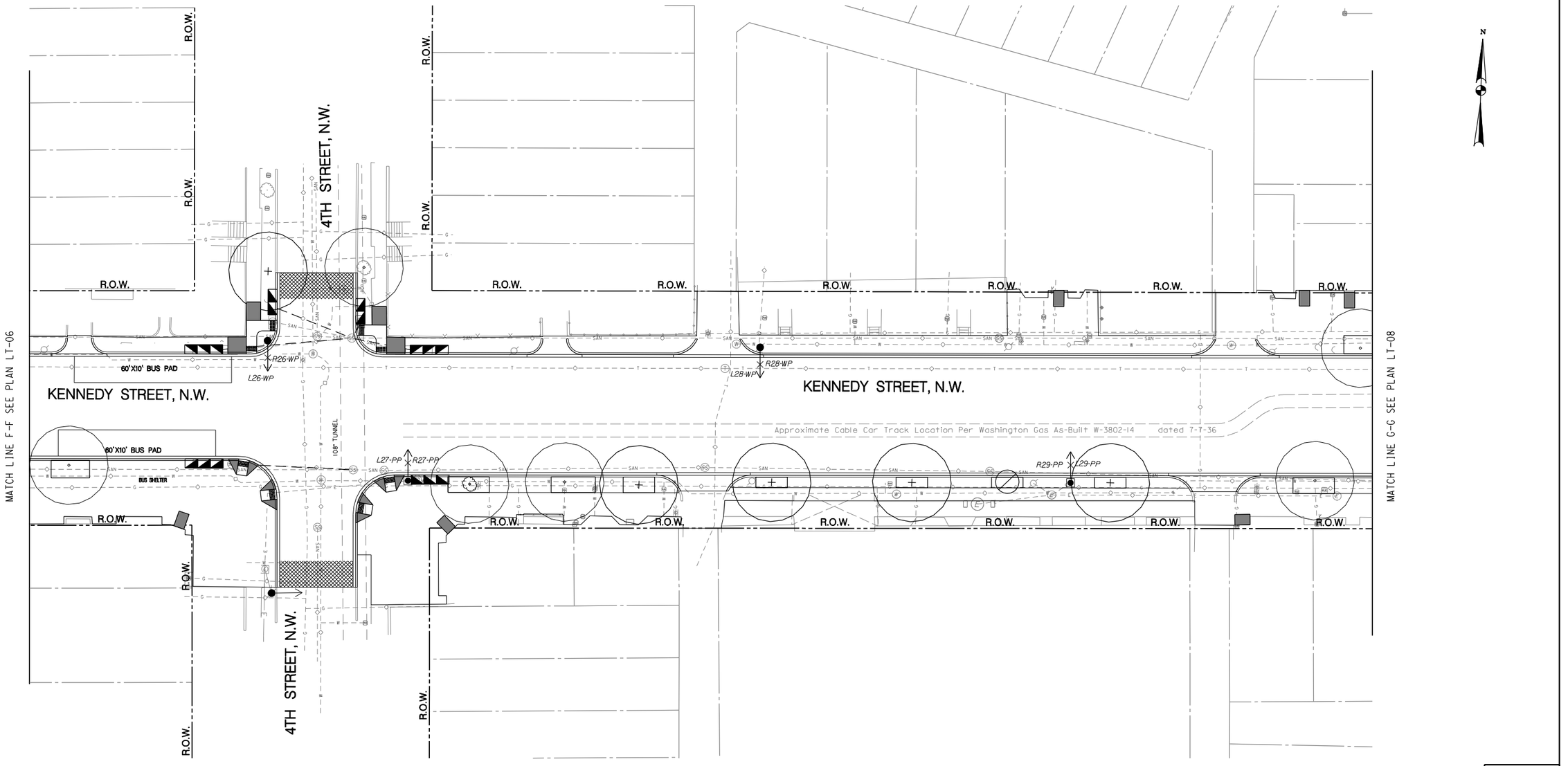

GRAPHIC SCALE

20 10 0 20 40

1" = 20'-0" HORIZ.

Precision Systems, Inc.
Engineers, Planners and Architects
WASHINGTON, D.C.

NO	DESCRIPTION	NAME	DATE

REVISIONS

LT-07

D.C. DEPARTMENT OF TRANSPORTATION
INFRASTRUCTURE PROJECT MANAGEMENT ADMINISTRATION
PROJECT MANAGEMENT DIVISION

KENNEDY STEET, N.W. IMPROVEMENT
FROM GEORGIA AVENUE TO NORTH CAPITOL STREET

PROJECT ENG. WZ
DESIGNED BY AYY
CHECKED BY MYH
DRAWN BY WZ/YZ
PROJECT MGR. AYY

STREET LIGHTING PLAN – 7

DIVISION CHIEF
DATE
FILE
SHEET 144 OF 173

p:\60570\lighting\plans\pLT_P007_60570.dgn
Tuesday, July 28, 2015 AT 04:50 PM
$PENTBLS$
$PLTDRVS$

REG	STATE	PROJECT	SHEET NO.	TOTAL SHEETS
3	D.C.	FAP No. STP-8888(480)	145	173

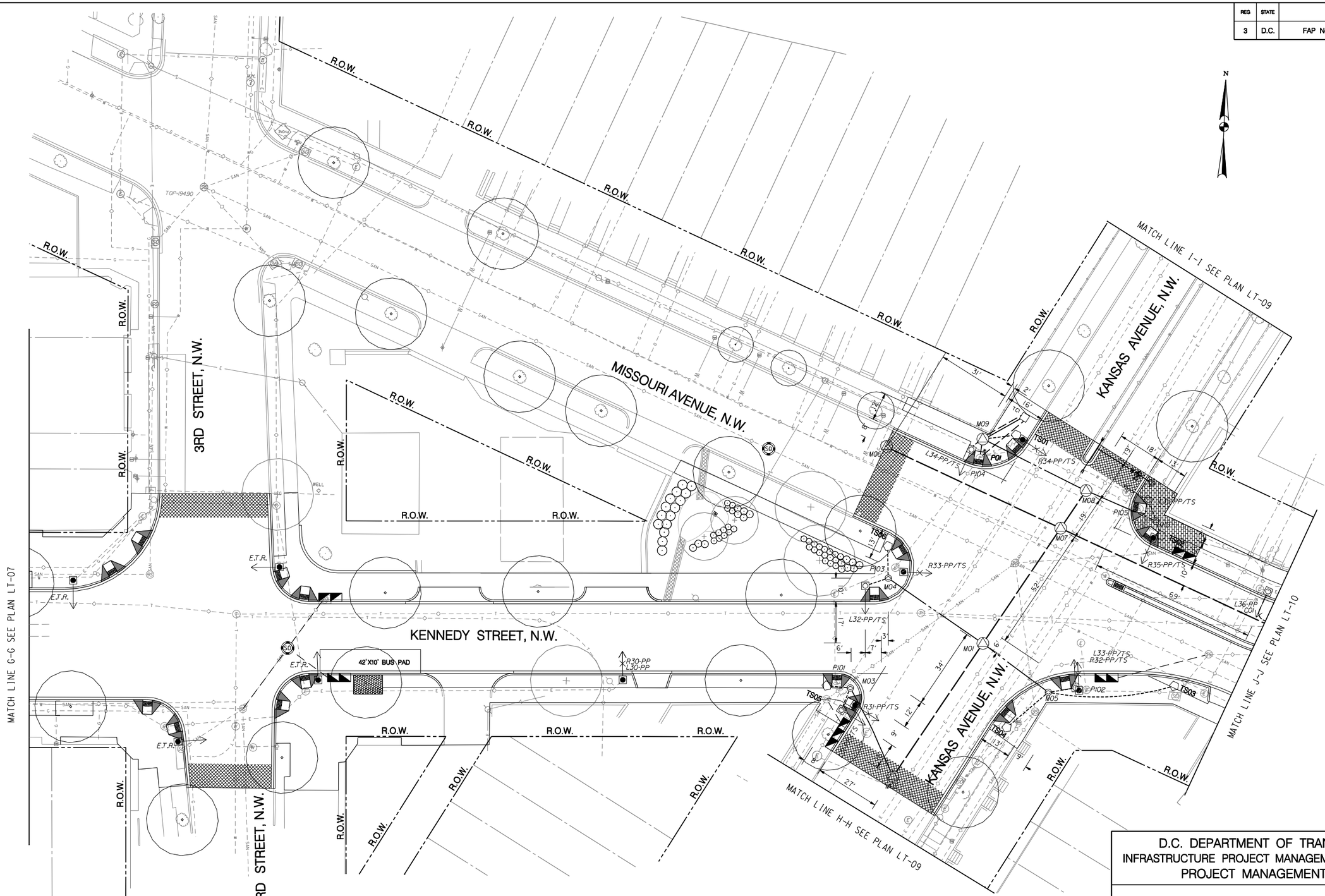

GRAPHIC SCALE

20 10 0 20 40

1" = 20'-0" HORIZ.

Precision Systems, Inc.
Engineers, Planners and Architects
WASHINGTON, D.C.

NO	DESCRIPTION	NAME	DATE
	REVISIONS		

LT-08

D.C. DEPARTMENT OF TRANSPORTATION
INFRASTRUCTURE PROJECT MANAGEMENT ADMINISTRATION
PROJECT MANAGEMENT DIVISION

KENNEDY STEET, N.W. IMPROVEMENT
FROM GEORGIA AVENUE TO NORTH CAPITOL STREET

PROJECT ENG. WZ
DESIGNED BY AYY
CHECKED BY MYH
DRAWN BY WZ/YZ
PROJECT MGR. AYY

STREET LIGHTING PLAN – 8

DIVISION CHIEF
DATE
FILE
SHEET 145 OF 173

p:\60570\lighting\plans\plt_p008_60570.dgn $PLTDRVS$ $PENTBLS$
Tuesday, July 28, 2015 AT 04:51 PM

REG	STATE	PROJECT	SHEET NO.	TOTAL SHEETS
3	D.C.	FAP No. STP-8888(480)	146	173

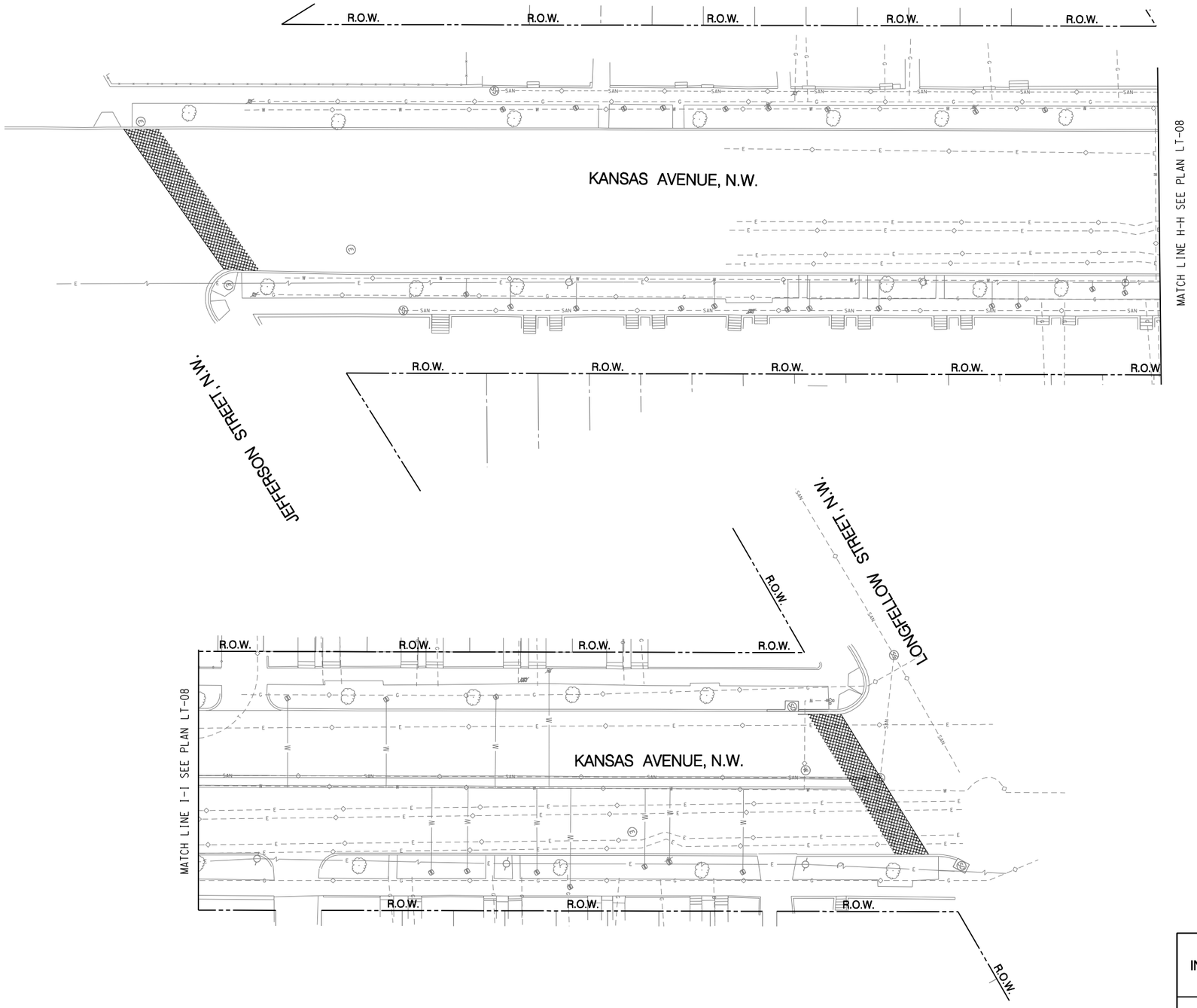

GRAPHIC SCALE

20 10 0 20 40

1" = 20'-0" HORIZ.

Precision Systems, Inc.
Engineers, Planners and Architects
WASHINGTON, D.C.

NO	DESCRIPTION	NAME	DATE

REVISIONS

LT-09

D.C. DEPARTMENT OF TRANSPORTATION
INFRASTRUCTURE PROJECT MANAGEMENT ADMINISTRATION
PROJECT MANAGEMENT DIVISION

KENNEDY STEET, N.W. IMPROVEMENT
FROM GEORGIA AVENUE TO NORTH CAPITOL STREET

PROJECT ENG. WZ
DESIGNED BY AYY
CHECKED BY MYH
DRAWN BY WZ/YZ
PROJECT MGR. AYY

STREET LIGHTING PLAN – 9

DIVISION CHIEF
DATE
FILE
SHEET 146 OF 173

p:\60570\lighting\plans\plt_P009_60570.dgn $PENTBLS$ $PLTDRVS$
Tuesday, July 28, 2015 AT 04:51 PM

REG	STATE	PROJECT	SHEET NO.	TOTAL SHEETS
3	D.C.	FAP No. STP-8888(480)	147	173

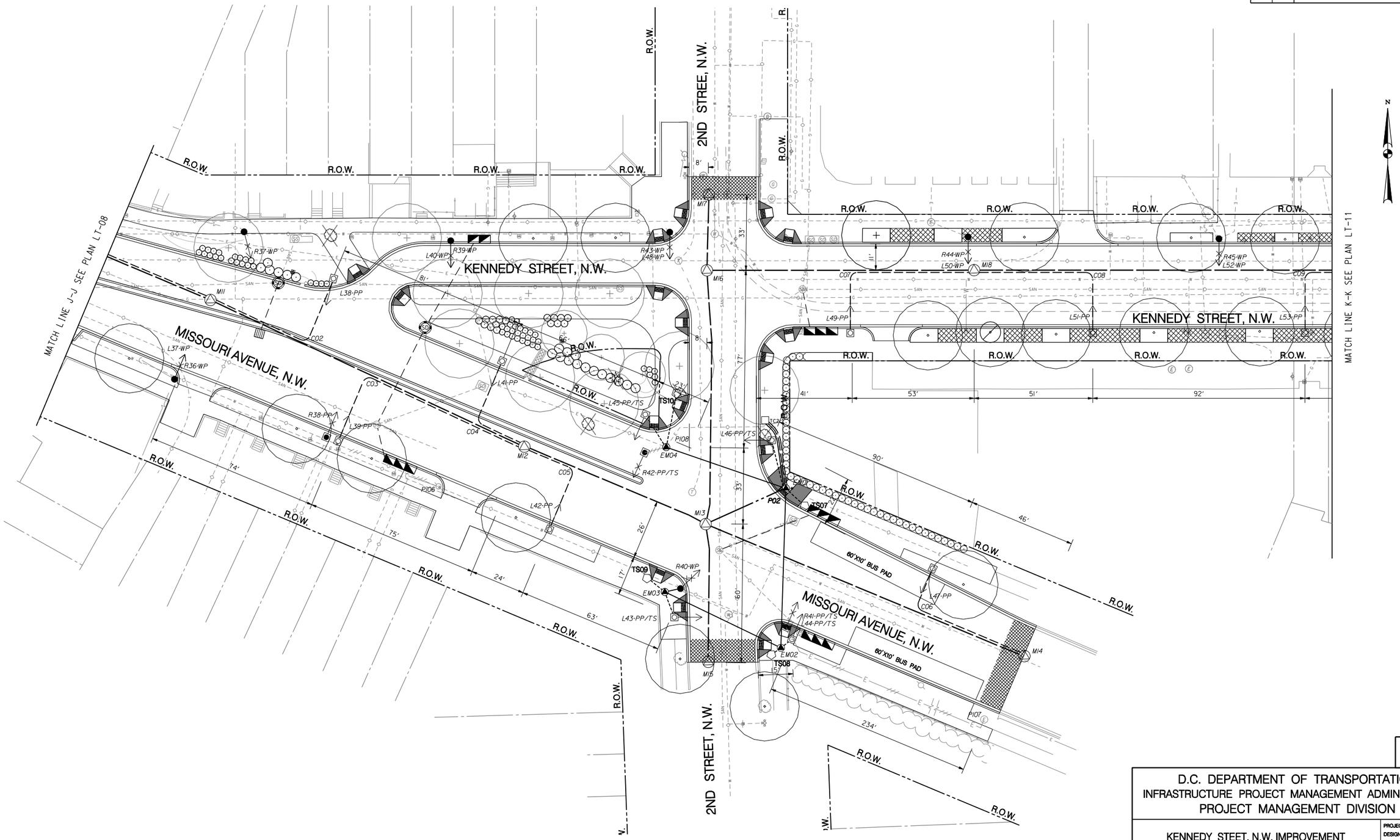

GRAPHIC SCALE

20 10 0 20 40

1" = 20'-0" HORIZ.

PSI

Precision Systems, Inc.

Engineers, Planners and Architects

WASHINGTON, D.C.

NO.	DESCRIPTION	NAME	DATE

REVISIONS

LT-10

D.C. DEPARTMENT OF TRANSPORTATION
INFRASTRUCTURE PROJECT MANAGEMENT ADMINISTRATION
PROJECT MANAGEMENT DIVISION

KENNEDY STEET, N.W. IMPROVEMENT
FROM GEORGIA AVENUE TO NORTH CAPITOL STREET

PROJECT ENG. WZ
DESIGNED BY AYY
CHECKED BY MYH
DRAWN BY WZ/YZ
PROJECT MGR. AYY

STREET LIGHTING PLAN – 10

DIVISION CHIEF
DATE
FILE
SHEET 147 OF 173

p:\60570\lighting\plans\pLT_P010_60570.dgn
Tuesday, July 28, 2015 AT 04:52 PM
$PENTBL$
$PLTDRV$

REG	STATE	PROJECT	SHEET NO.	TOTAL SHEETS
3	D.C.	FAP No. STP-8888(480)	148	173

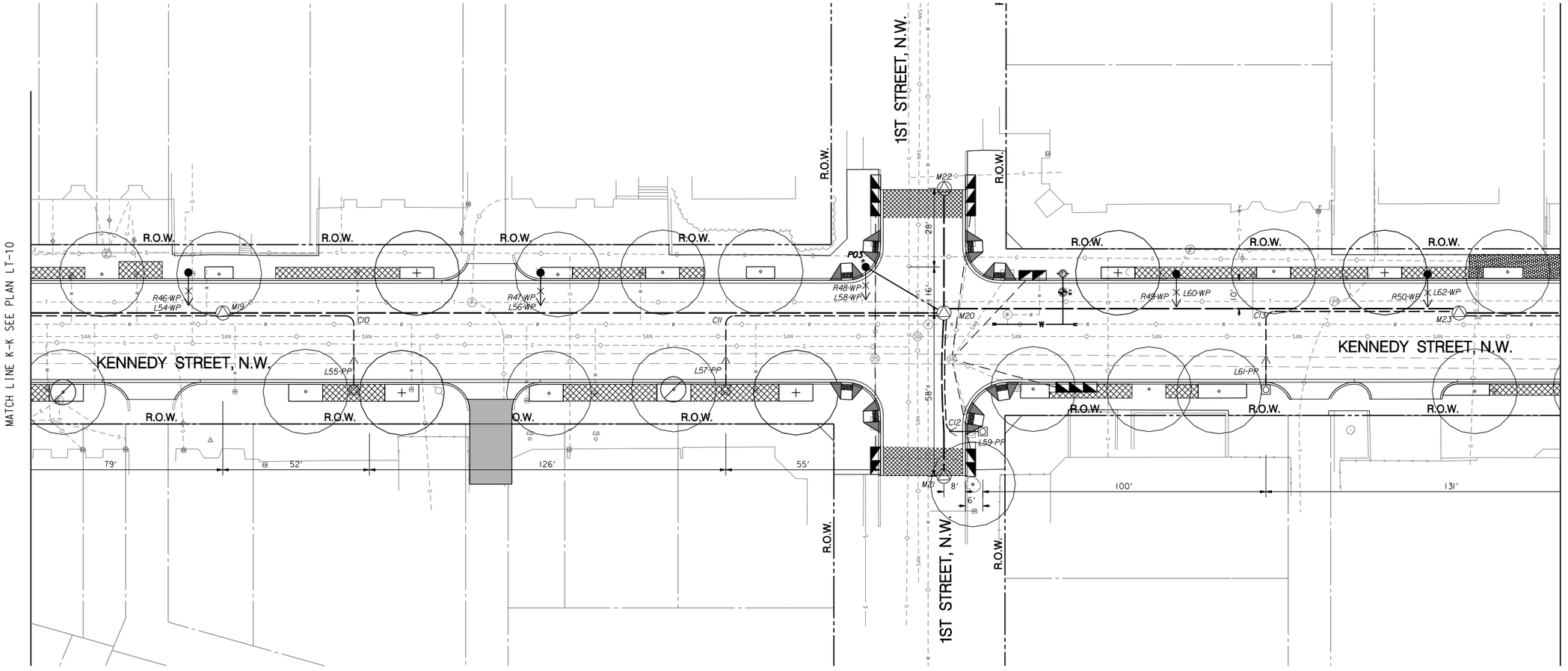

GRAPHIC SCALE

20 10 0 20 40

1" = 20'-0" HORIZ.

PSI
Precision Systems, Inc.
Engineers, Planners and Architects
WASHINGTON, D.C.

NO.	DESCRIPTION	NAME	DATE

REVISIONS

LT-11

D.C. DEPARTMENT OF TRANSPORTATION
INFRASTRUCTURE PROJECT MANAGEMENT ADMINISTRATION
PROJECT MANAGEMENT DIVISION

KENNEDY STEET, N.W. IMPROVEMENT
FROM GEORGIA AVENUE TO NORTH CAPITOL STREET

PROJECT ENG. WZ
DESIGNED BY AYY
CHECKED BY MYH
DRAWN BY WZ/YZ
PROJECT MGR. AYY

STREET LIGHTING PLAN – 11

DIVISION CHIEF
DATE
FILE
SHEET 148 OF 173

p:\60570\lighting\plans\pLT_P01_60570.dgn
Tuesday, July 28, 2015 AT 04:52 PM
$PENTBLS$
$PLTDRVS$

REG	STATE	PROJECT	SHEET NO.	TOTAL SHEETS
3	D.C.	FAP No. STP-8888(480)	149	173

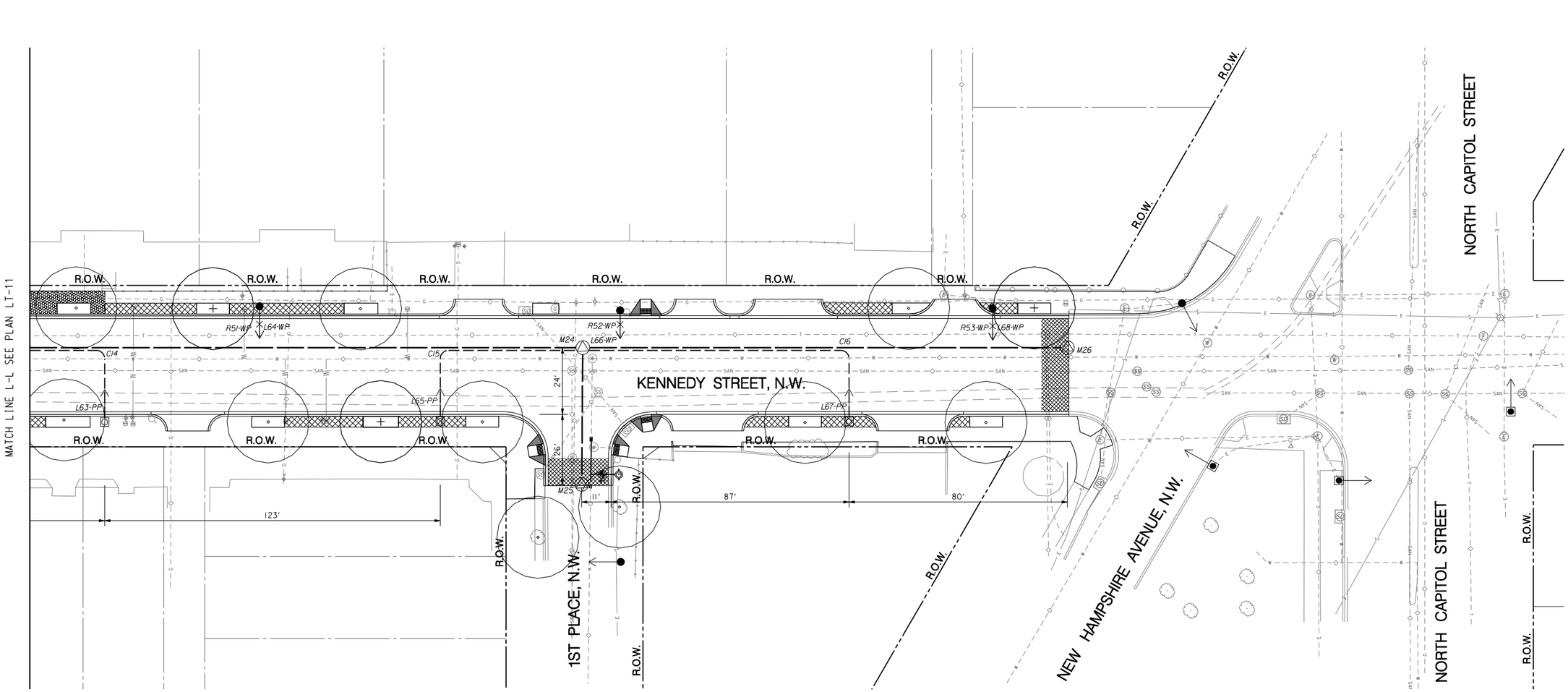

GRAPHIC SCALE

20 10 0 20 40

1" = 20'-0" HORIZ.

Precision Systems, Inc.
Engineers, Planners and Architects
WASHINGTON, D.C.

NO.	DESCRIPTION	NAME	DATE

REVISIONS

LT-12

D.C. DEPARTMENT OF TRANSPORTATION
INFRASTRUCTURE PROJECT MANAGEMENT ADMINISTRATION
PROJECT MANAGEMENT DIVISION

KENNEDY STEET, N.W. IMPROVEMENT
FROM GEORGIA AVENUE TO NORTH CAPITOL STREET

PROJECT ENG. WZ
DESIGNED BY AYY
CHECKED BY MYH
DRAWN BY WZ/YZ
PROJECT MGR. AYY

STREET LIGHTING PLAN – 12

DIVISION CHIEF
DATE
FILE
SHEET 149 OF 173

p:\60570\lighting\plans\pLT_P012_60570.dgn
Tuesday, July 28, 2015 AT 04:53 PM
$PLTDRVS$
$PENTBLS$

REG	STATE	PROJECT	SHEET NO.	TOTAL SHEETS
3	D.C.	FAP No. STP-8888(480)	150	173

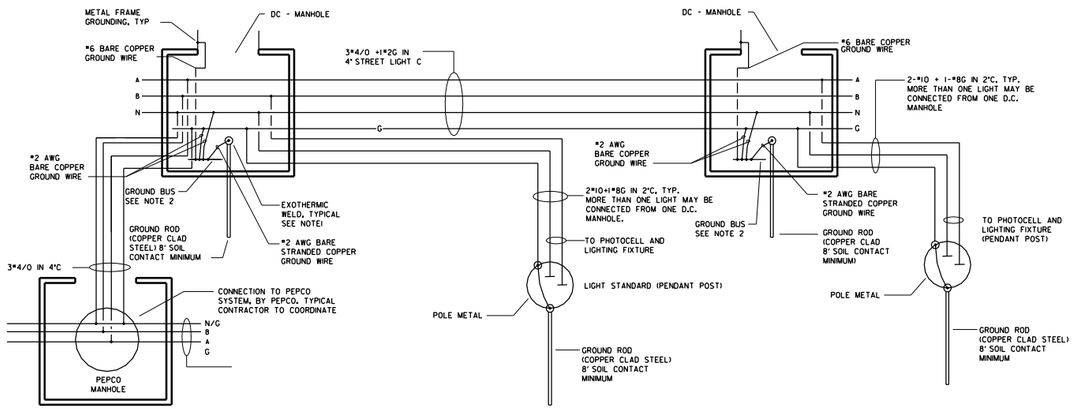

TYPICAL WIRING DIAGRAM
NOT TO SCALE

GENERAL NOTES:

1. PROVIDE TWO COATS OF ELECTRICAL WATERPROOF COATING OVER WELD AND BARE METALS IN THE SURROUNDING AREAS. REQUIREMENT IS TYPICAL FOR ALL EXOTHERMIC WELD FOR GROUND CONNECTION.
2. PROVIDE A 2"X1/4"X8" (HXWXL) COPPER GROUND BUS NEAR THE GROUND ROD. INSTALL THE BUS ON MANHOLE WALL WITH ANCHORS AND TWO 1/4 " BOLTS, 2 INCHES FROM MANHOLE WALL SURFACE.

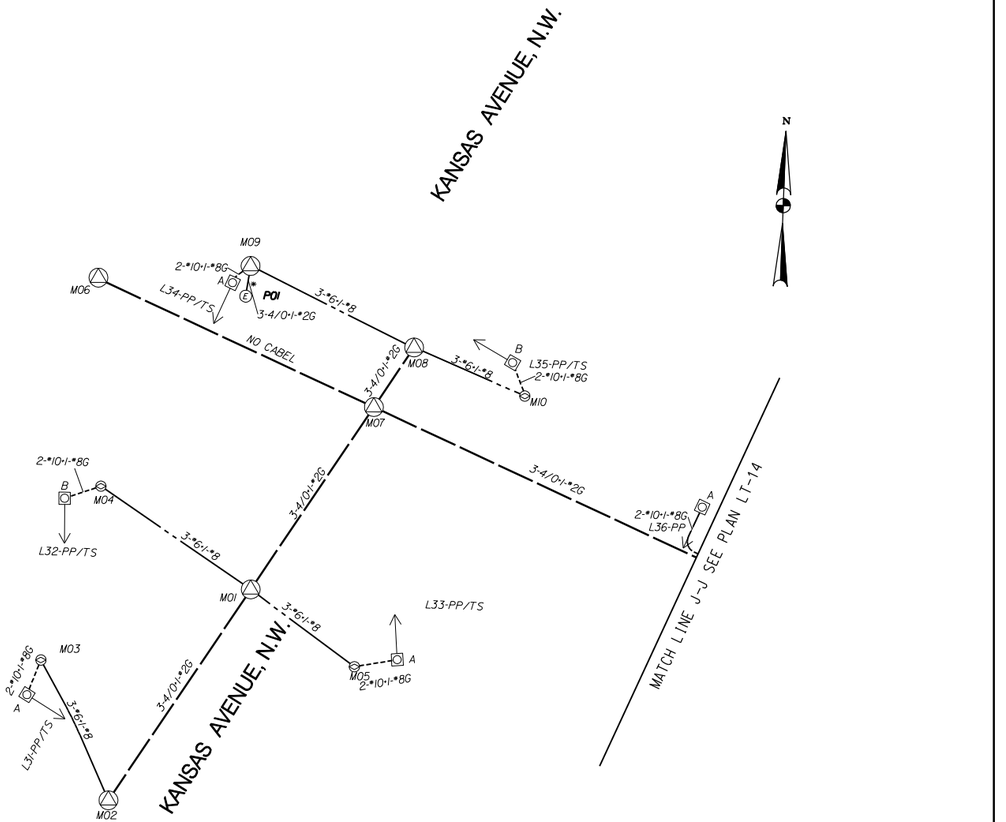

GRAPHIC SCALE

20 10 0 20 40

1" = 20'-0" HORIZ.

Precision Systems, Inc.
Engineers, Planners and Architects
WASHINGTON, D.C.

NO	DESCRIPTION	NAME	DATE

REVISIONS

LT-13

D.C. DEPARTMENT OF TRANSPORTATION
INFRASTRUCTURE PROJECT MANAGEMENT ADMINISTRATION
PROJECT MANAGEMENT DIVISION

KENNEDY STEET, N.W. IMPROVEMENT
FROM GEORGIA AVENUE TO NORTH CAPITOL STREET

PROJECT ENG. WZ
DESIGNED BY AYY
CHECKED BY MYH
DRAWN BY WZ/YZ
PROJECT MGR. AYY

STREET LIGHTING CABLE SCHEMATIC – 1

DIVISION CHIEF
DATE
FILE
SHEET 150 OF 173

p:\60570\lighting\plans\pLT_S008_60570.dgn
Tuesday, July 28, 2015 AT 04:53 PM
$PENTBLS$
$PLTDRVS$

REG	STATE	PROJECT	SHEET NO.	TOTAL SHEETS
3	D.C.	FAP No. STP-8888(480)	151	173

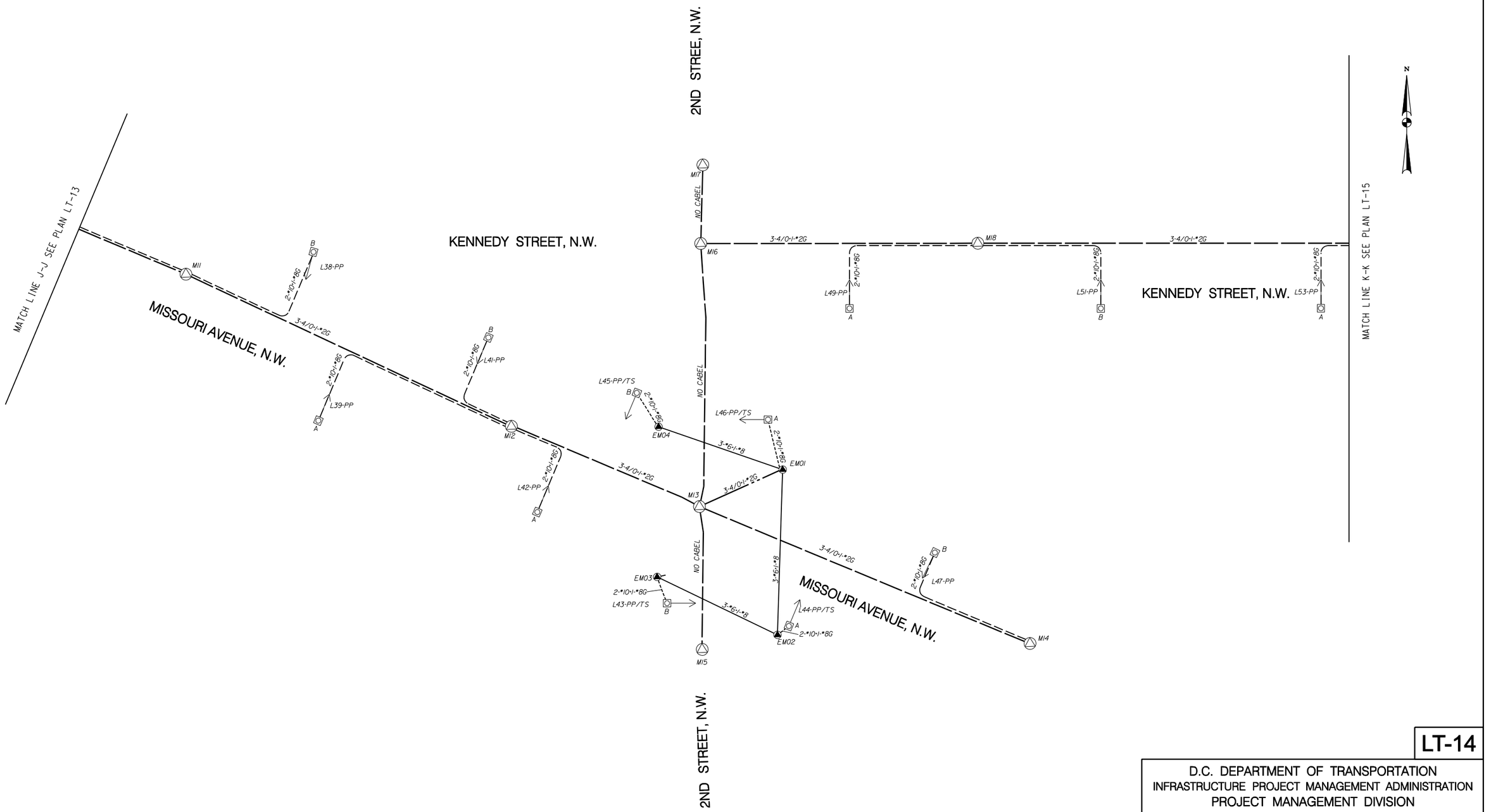

GRAPHIC SCALE

20 10 0 20 40

1" = 20'-0" HORIZ.

Precision Systems, Inc.
Engineers, Planners and Architects
WASHINGTON, D.C.

NO	DESCRIPTION	NAME	DATE

REVISIONS

LT-14

D.C. DEPARTMENT OF TRANSPORTATION
INFRASTRUCTURE PROJECT MANAGEMENT ADMINISTRATION
PROJECT MANAGEMENT DIVISION

KENNEDY STEET, N.W. IMPROVEMENT
FROM GEORGIA AVENUE TO NORTH CAPITOL STREET

PROJECT ENG. WZ
DESIGNED BY AYY
CHECKED BY MYH
DRAWN BY WZ/YZ
PROJECT MGR. AYY

STREET LIGHTING CABLE SCHEMATIC – 2

DIVISION CHIEF
DATE
FILE
SHEET 151 OF 173

p:\60570\lighting\plans\pLT_S010_60570.dgn
Tuesday, July 28, 2015 AT 04:53 PM
$PLTDRV$$
$PENTBL$$

REG	STATE	PROJECT	SHEET NO.	TOTAL SHEETS
3	D.C.	FAP No. STP-8888(480)	152	173

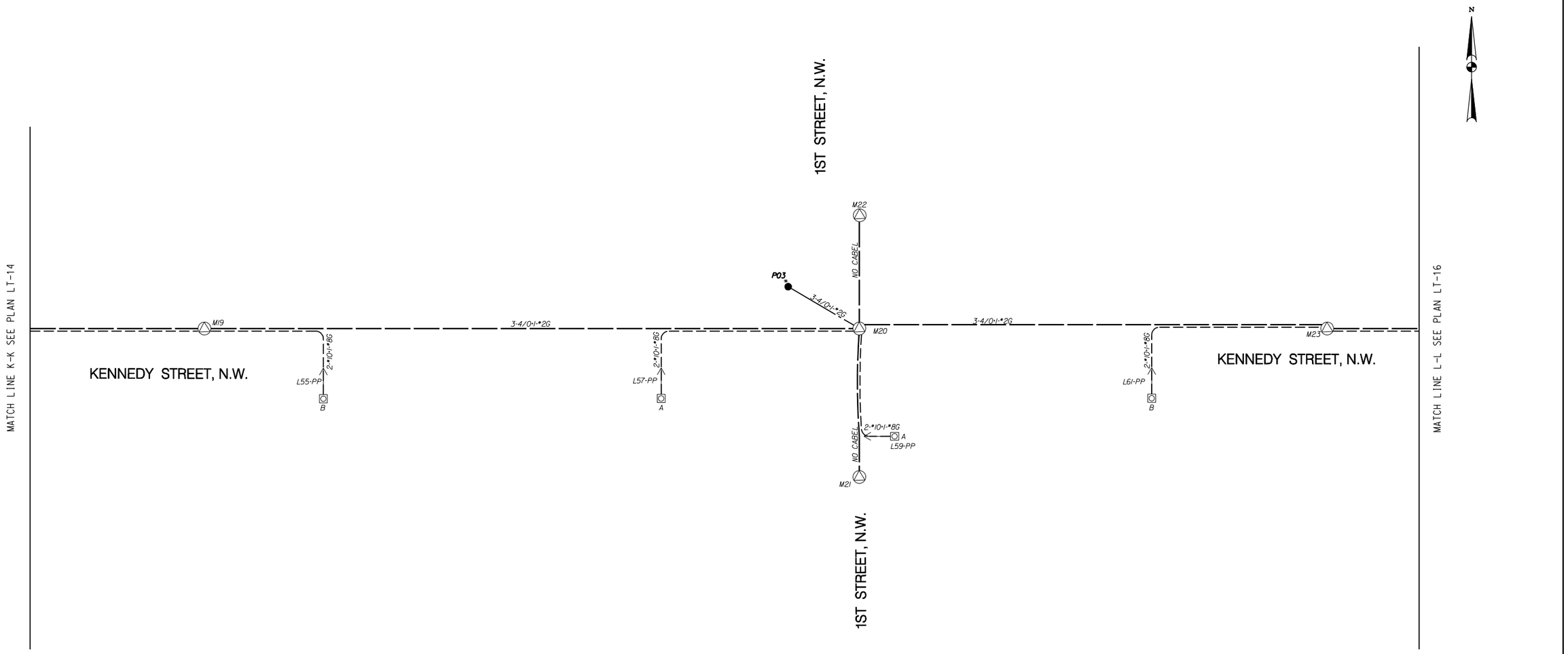

GRAPHIC SCALE

20 10 0 20 40

1" = 20'-0" HORIZ.

Precision Systems, Inc.
Engineers, Planners and Architects
WASHINGTON, D.C.

NO.	DESCRIPTION	NAME	DATE

REVISIONS

LT-15

D.C. DEPARTMENT OF TRANSPORTATION
INFRASTRUCTURE PROJECT MANAGEMENT ADMINISTRATION
PROJECT MANAGEMENT DIVISION

KENNEDY STEET, N.W. IMPROVEMENT
FROM GEORGIA AVENUE TO NORTH CAPITOL STREET

PROJECT ENG. WZ
DESIGNED BY AYY
CHECKED BY MYH
DRAWN BY WZ/YZ
PROJECT MGR. AYY

STREET LIGHTING CABLE SCHEMATIC – 3

DIVISION CHIEF

DATE

FILE

SHEET 152 OF 173

p:\60570\lighting\plans\pLT_S011_60570.dgn
Tuesday, July 28, 2015 AT 04:54 PM
$PLTDRVS$
$PENTBLS$

REG	STATE	PROJECT	SHEET NO.	TOTAL SHEETS
3	D.C.	FAP No. STP-8888(480)	153	173

N

GRAPHIC SCALE

20 10 0 20 40

1" = 20'-0" HORIZ.

Precision Systems, Inc.
Engineers, Planners and Architects
WASHINGTON, D.C.

NO	DESCRIPTION	NAME	DATE

REVISIONS

LT-16

D.C. DEPARTMENT OF TRANSPORTATION
INFRASTRUCTURE PROJECT MANAGEMENT ADMINISTRATION
PROJECT MANAGEMENT DIVISION

KENNEDY STEET, N.W. IMPROVEMENT
FROM GEORGIA AVENUE TO NORTH CAPITOL STREET

PROJECT ENG. WZ
DESIGNED BY AYY
CHECKED BY MYH
DRAWN BY WZ/YZ
PROJECT MGR. AYY

STREET LIGHTING CABLE SCHEMATIC – 4

DIVISION CHIEF
DATE
FILE
SHEET 153 OF 173

p:\60570\lighting\plans\pLT_S012_60570.dgn
Tuesday, July 28, 2015 AT 04:54 PM
$PLTDRVS$
$PENTBLS$

REG	STATE	PROJECT	SHEET NO.	TOTAL SHEETS
3	D.C.	FAP No. STP-8888(480)	154	173

CONDUIT SUMMARY (UNIT: FT)											
SCHEDULE											
PAY ITEM NUMBER			614 122	613 038	613 036	614 213	614 210	613 040	614 198	614 200	614 202
FROM STA.	TO STA.	DISTANCE	1-2"	1-2"&1-4"	1-2"&2-4"	2-2"&2-4"	2-4"	4-4"	6-4"	6-4" & 1-2"	6-4" & 2-2"
M01	M02	71							71		
M02	M03	44						44			
M03	L31-PP/TS	10		10							
M01	M04	48						48			
M04	L32-PP/TS	11		11							
M01	M05	35						35			
M05	L33-PP/TS	12		12							
M01	M07	59							59		
M07	M06	80							80		
M07	M08	19							19		
M08	M09	48						48			
M09	L34-PP/TS	7		7							
M09	P01	8						8			
M08	M10	32						32			
M10	L35-PP/TS	10		10							
M07	C01	90							90		
C01	L36-PP	13	13								
C01	M11	53								53	
M11	C02	40								40	
C02	L38-PP	29	29								
C02	C03	35							35		
C03	L39-PP	32	32								
C03	C04	52								52	
C04	L41-PP	30	30								
C04	M12	23									23
M12	C05	24								24	
C05	L42-PP	30	30								
C05	M13	63							63		
M13	M15	60							60		
M13	C06	97							97		
C06	L47-PP	20	20								
C06	M14	52								52	
EM01	M13	37						37			
EM01	L46-PP/TS	22		22							
EM02	L44-PP/TS	6		6							
EM03	L43-PP/TS	12		12							
EM04	L45-PP/TS	17		17							
M13	M16	110							110		
M16	M17	36							36		
M16	C07	63								63	
C07	L49-PP	28	28								
C07	M18	50							50		
M18	C08	52								52	
C08	L51-PP	28	28								
C08	C09	92							92		
C09	L53-PP	28	28								
C09	M19	80								80	
M19	C10	47								47	
C10	L55-PP	28	28								
C10	C11	132							132		
C11	L57-PP	28	28								
C11	M20	77								77	
M20	P03	32					32				
M20	C12	42								42	
C12	L59-PP	14	14								
C12	M21	21							21		
M20	M22	50							50		
M20	C13	114							114		
C13	L61-PP	29	29								
C13	M23	69								69	
M23	C14	63								63	

CONDUIT SUMMARY (UNIT: FT)											
SCHEDULE											
PAY ITEM NUMBER			614 122	613 038	613 036	614 213	614 210	613 040	614 198	614 200	614 202
FROM STA.	TO STA.	DISTANCE	1-2"	1-2"&1-4"	1-2"&2-4"	2-2"&2-4"	2-4"	4-4"	6-4"	6-4" & 1-2"	6-4" & 2-2"
C14	L63-PP	28	28								
C14	C15	123							123		
C15	L65-PP	27	27								
C15	M24	51								51	
M24	M25	46							46		
M24	C16	99								99	
C16	L67-PP	27	27								
C16	M26	95							95		
M09	TS01	14		14							
M10	TS02	7		7							
M05	TS03	53		53							
M05	TS04	23		23							
M03	TS05	11		11							
M04	TS06	14		14							
M09	TC1	20			20						
TC1	P01	26	26								
EM01	TS07	12		12							
EM02	TS08	6		6							
EM03	TS09	10		10							
EM04	TS10	24		24							
TC2	P02	33				33					
TOTAL			445	281	20	33	32	252	1443	864	23

P:\60570\lighting\plans\pLT_T00l_60570.dgn
Thursday, April 14, 2016 AT 02:44 PM
$PLTDRVS$
$PENTBLS$

Precision Systems, Inc.
Engineers, Planners and Architects
WASHINGTON, D.C.

NO.	DESCRIPTION	NAME	DATE

REVISIONS

LT-17

D.C. DEPARTMENT OF TRANSPORTATION
INFRASTRUCTURE PROJECT MANAGEMENT ADMINISTRATION
PROJECT MANAGEMENT DIVISION

KENNEDY STEET, N.W. IMPROVEMENT
FROM GEORGIA AVENUE TO NORTH CAPITOL STREET

PROJECT ENG. WZ
DESIGNED BY AYY
CHECKED BY MYH
DRAWN BY WZ/YZ
PROJECT MGR. AYY

STREET LIGHTING TABLES – 1

DIVISION CHIEF
DATE
FILE
SHEET 154 OF 173

REG	STATE	PROJECT	SHEET NO.	TOTAL SHEETS
3	D.C.	FAP No. STP-8888(480)	155	173

CABLE SUMMARY (UNIT: FT)							
SCHEDULE			QUANTITY				
			CABLE			GROUND WIRE	
PAY ITEM NUMBER			614 290	614 242	614 230	614 350	614 332
FROM STA.	TO STA.	DISTANCE	4/0	#6	#10	#2	#8
M01	M02	65	225			75	
M02	M03	40		150			50
M03	L31-PP/TS	10			30		15
M01	M04	48		174			58
M04	L32-PP/TS	11			32		16
M01	M05	35		135			45
M05	L33-PP/TS	12			34		17
M01	M07	59	207			69	
M07	M08	19	87			29	
M08	M09	48		174			58
M09	L34-PP/TS	7			24		12
M09	P01	8	54			18	
M08	M10	32		126			42
M10	L35-PP/TS	10			30		15
M07	M11	143	459			153	
M11	L36-PP	66			142		71
M11	L38-PP	69			148		74
M11	M12	142	456			152	
M12	L39-PP	100			210		105
M12	L41-PP	53			116		58
M12	L42-PP	53			116		58
EM01	EM02	70		240			80
EM02	EM03	56		198			66
EM01	EM04	55		195			65
EM03	L43-PP/TS	12			34		17
EM02	L44-PP/TS	7			24		12
M12	M13	95	315			105	
M13	EM01	37					47
M13	M14	148	474			158	
M14	L47-PP	71			152		76
EM04	L45-PP/TS	17			44		22
EM01	L46-PP/TS	22			54		27
M16	M18	29	117			39	
M18	L49-PP	7			24		12
M18	L51-PP	79			168		84
M18	M19	223	699			233	
M19	L53-PP	107			224		112
M19	L55-PP	79			168		84
M19	M20	255	795			265	
M20	L57-PP	108			226		113
M20	L59-PP	56			122		61
M20	P04	32	126			42	
M20	M23	182	576			192	
M23	L61-PP	97			204		102
M23	L63-PP	91			192		96
M23	M24	237	741			247	
M24	L65-PP	78			166		83
M24	L67-PP	126			262		131
TOTAL			5331	1392	2946	1777	1984

PEPCO MANHOLE AND OVERHEAD POLE DISCONNECTION (REMOVALS)			
MANHOLE NO.	MD GRID PLAT	MD GRID NO.	ACTION REQUIRED
P101	795409	591018	CUT AND REMOVE CABLES, TAPE JOINT AND PLUG CONDUIT AND REPAIR MH WALL, CLEAN MANHOLE OF ALL CONSTRUCTION DEBRIS
P102	795409	697011	CUT AND REMOVE CABLES, TAPE JOINT AND PLUG CONDUIT AND REPAIR MH WALL, CLEAN MANHOLE OF ALL CONSTRUCTION DEBRIS
P103	795409	607055	CUT AND REMOVE CABLES, TAPE JOINT AND PLUG CONDUIT AND REPAIR MH WALL, CLEAN MANHOLE OF ALL CONSTRUCTION DEBRIS
P104	795409	860075	CUT AND REMOVE CABLES, TAPE JOINT AND PLUG CONDUIT AND REPAIR MH WALL, CLEAN MANHOLE OF ALL CONSTRUCTION DEBRIS
P105	795409	703073	CUT AND REMOVE CABLES, TAPE JOINT AND PLUG CONDUIT AND REPAIR MH WALL, CLEAN MANHOLE OF ALL CONSTRUCTION DEBRIS
P106	795408	8992	CUT AND REMOVE CABLES
P107	796408	275774	CUT AND REMOVE CABLES, TAPE JOINT AND PLUG CONDUIT AND REPAIR MH WALL, CLEAN MANHOLE OF ALL CONSTRUCTION DEBRIS
P108	796408	N/A	CUT AND REMOVE CABLES, TAPE JOINT AND PLUG CONDUIT AND REPAIR MH WALL, CLEAN MANHOLE OF ALL CONSTRUCTION DEBRIS

DISTRICT STREET LIGHT POLE INFORMATION (REMOVALS)						
LIGHT NO.	LOCATION	POLE TYPE	LIGHT SOURCE	LAMP WATTS	REMARKS	DATE REMOVED FROM SERVICE
R01-WP	1ST POLE OF N/S KENNEDY STREET E/O ILLINOIS AVENUE, N.W.	WOOD	HPS	250W	TEARDROP, REPLACE FIXTURE ONLY, POLE AND ARM TO REMAIN	
R02-PP	1ST POLE OF S/S KENNEDY STREET E/O ILLINOIS AVENUE, N.W.	PEND POST	HPS	250W	TEARDROP, REPLACE FIXTURE ONLY, POLE AND ARM TO REMAIN	
R03-PP	2ND POLE OF S/S KENNEDY STREET E/O ILLINOIS AVENUE, N.W.	PEND POST	HPS	250W	TEARDROP, REPLACE FIXTURE ONLY, POLE AND ARM TO REMAIN	
R04-WP	NW CORNER KENNEDY STREET & 9TH STREET, N.W.	WOOD	HPS	250W	TEARDROP, REPLACE FIXTURE ONLY, POLE AND ARM TO REMAIN	
R05-PP	SE CORNER KENNEDY STREET & 9TH STREET, N.W.	PEND POST	HPS	250W	TEARDROP, REPLACE FIXTURE ONLY, POLE AND ARM TO REMAIN	
R06-PP	1ST POLE OF S/S KENNEDY STREET E/O 9TH STREET, N.W.	PEND POST	HPS	250W	TEARDROP, REPLACE FIXTURE ONLY, POLE AND ARM TO REMAIN	
R07-WP	1ST POLE OF N/S KENNEDY STREET E/O 9TH STREET, N.W.	WOOD	HPS	250W	TEARDROP, REPLACE FIXTURE ONLY, POLE AND ARM TO REMAIN	
R08-WP	2ND POLE OF N/S KENNEDY STREET E/O 9TH STREET, N.W.	WOOD	HPS	250W	TEARDROP, REPLACE FIXTURE ONLY, POLE AND ARM TO REMAIN	
R09-PP	SW CORNER KENNEDY STREET & 8TH STREET, N.W.	PEND POST	HPS	250W	TEARDROP, REPLACE FIXTURE ONLY, POLE AND ARM TO REMAIN	
R10-WP	NE CORNER KENNEDY STREET & 8TH STREET, N.W.	WOOD	HPS	250W	TEARDROP, REPLACE FIXTURE ONLY, POLE AND ARM TO REMAIN	
R11-PP	1ST POLE OF S/S KENNEDY STREET E/O 8TH STREET, N.W.	PEND POST	HPS	250W	TEARDROP, REPLACE FIXTURE ONLY, POLE AND ARM TO REMAIN	
R12-WP	1ST POLE OF N/S KENNEDY STREET E/O 8TH STREET, N.W.	WOOD	HPS	250W	TEARDROP, REPLACE FIXTURE ONLY, POLE AND ARM TO REMAIN	
R13-PP	2ND POLE OF S/S KENNEDY STREET E/O 8TH STREET, N.W.	PEND POST	HPS	250W	TEARDROP, REPLACE FIXTURE ONLY, POLE AND ARM TO REMAIN	
R14-PP	SW CORNER KENNEDY STREET & 7TH STREET, N.W.	PEND POST	HPS	250W	TEARDROP, REPLACE FIXTURE ONLY, POLE AND ARM TO REMAIN	
R15-WP	NE CORNER KENNEDY STREET & 7TH STREET, N.W.	WOOD	HPS	250W	TEARDROP, REPLACE FIXTURE ONLY, POLE AND ARM TO REMAIN	
R16-WP	1ST POLE OF N/S KENNEDY STREET E/O 7TH STREET, N.W.	WOOD	HPS	250W	TEARDROP, REPLACE FIXTURE ONLY, POLE AND ARM TO REMAIN	
R17-PP	1ST POLE OF S/S KENNEDY STREET E/O 7TH STREET, N.W.	PEND POST	HPS	250W	TEARDROP, REPLACE FIXTURE ONLY, POLE AND ARM TO REMAIN	
R18-WP	2ND POLE OF N/S KENNEDY STREET E/O 7TH STREET, N.W.	WOOD	HPS	250W	TEARDROP, REPLACE FIXTURE ONLY, POLE AND ARM TO REMAIN	
R19-PP	2ND POLE OF S/S KENNEDY STREET E/O 7TH STREET, N.W.	PEND POST	HPS	250W	TEARDROP, REPLACE FIXTURE ONLY, POLE AND ARM TO REMAIN	
R20-WP	3RD POLE OF N/S KENNEDY STREET E/O 7TH STREET, N.W.	WOOD	HPS	250W	TEARDROP, REPLACE FIXTURE ONLY, POLE AND ARM TO REMAIN	
R21-WP	NW CORNER KENNEDY STREET & 5TH STREET, N.W.	WOOD	HPS	250W	TEARDROP, REPLACE FIXTURE ONLY, POLE AND ARM TO REMAIN	
R22-PP	1ST POLE OF S/S KENNEDY STREET E/O 5TH STREET, N.W.	PEND POST	HPS	250W	TEARDROP, REPLACE FIXTURE ONLY, POLE AND ARM TO REMAIN	
R23-PP	2ND POLE OF S/S KENNEDY STREET E/O 5TH STREET, N.W.	PEND POST	HPS	250W	TEARDROP, REPLACE FIXTURE ONLY, POLE AND ARM TO REMAIN	
R24-WP	1ST POLE OF N/S KENNEDY STREET E/O 5TH STREET, N.W.	WOOD	HPS	250W	TEARDROP, REPLACE FIXTURE ONLY, POLE AND ARM TO REMAIN	
R25-PP	3RD POLE OF S/S KENNEDY STREET E/O 5TH STREET, N.W.	PEND POST	HPS	250W	TEARDROP, REPLACE FIXTURE ONLY, POLE AND ARM TO REMAIN	
R26-WP	NW CORNER KENNEDY STREET & 4TH STREET, N.W.	WOOD	HPS	250W	TEARDROP, REPLACE FIXTURE ONLY, POLE AND ARM TO REMAIN	
R27-PP	SE CORNER KENNEDY STREET & 4TH STREET, N.W.	PEND POST	HPS	250W	TEARDROP, REPLACE FIXTURE ONLY, POLE AND ARM TO REMAIN	
R28-WP	1ST POLE OF N/S KENNEDY STREET E/O 4TH STREET, N.W.	WOOD	HPS	250W	TEARDROP, REPLACE FIXTURE ONLY, POLE AND ARM TO REMAIN	
R29-PP	1ST POLE OF S/S KENNEDY STREET E/O 4TH STREET, N.W.	PEND POST	HPS	250W	TEARDROP, REPLACE FIXTURE ONLY, POLE AND ARM TO REMAIN	
R30-PP	1ST POLE OF S/S KENNEDY STREET E/O 3RD STREET, N.W.	PEND POST	HPS	250W	TEARDROP, REMOVE POLE AND FIXTURE	
R31-PP/TS	SW CORNER KANSAS AVENUE & KENNEDY STREET, N.W.	PEND POST	HPS	400W	COBRA HEAD, REMOVE POLE AND FIXTURE	
R32-PP/TS	SE CORNER KANSAS AVENUE & MISSOURI AVENUE, N.W.	PEND POST	HPS	400W	COBRA HEAD, REMOVE POLE AND FIXTURE	
R33-PP/TS	SW CORNER KANSAS AVENUE & MISSOURI AVENUE, N.W.	PEND POST	HPS	400W	COBRA HEAD, REMOVE POLE AND FIXTURE	
R34-PP/TS	NW CORNER KANSAS AVENUE & MISSOURI AVENUE, N.W.	PEND POST	HPS	400W	COBRA HEAD, REMOVE POLE AND FIXTURE	
R35-PP/TS	NE CORNER KANSAS AVENUE & MISSOURI AVENUE, N.W.	PEND POST	HPS	400W	COBRA HEAD, REMOVE POLE AND FIXTURE	
R36-WP	1ST POLE OF S/S MISSOURI AVENUE E/O KANSAS AVENUE, N.W.	WOOD	HPS	250W	COBRA HEAD, REPLACE FIXTURE AND ARM, POLE TO REMAIN	
R37-WP	NW CORNER MISSOURI AVENUE & KENNEDY STREET, N.W.	WOOD	HPS	400W	COBRA HEAD, REPLACE FIXTURE AND ARM, POLE TO REMAIN	
R38-PP	2ND POLE OF S/S MISSOURI AVENUE E/O KANSAS AVENUE, N.W.	PEND POST	HPS	400W	COBRA HEAD, REMOVE POLE AND FIXTURE	
R39-WP	1ST POLE OF N/S KENNEDY STREET W/O 2ND STREET, N.W.	WOOD	HPS	400W	COBRA HEAD, REPLACE FIXTURE AND ARM, POLE TO REMAIN	
R40-WP	SW CORNER MISSOURI AVENUE & 2ND STREET, N.W.	WOOD	HPS	400W	COBRA HEAD, REPLACE FIXTURE AND ARM, POLE TO REMAIN	
R41-PP/TS	SE CORNER MISSOURI AVENUE & 2ND STREET, N.W.	PEND POST	HPS	400W	COBRA HEAD, REMOVE POLE AND FIXTURE	
R42-PP/TS	NW CORNER MISSOURI AVENUE & 2ND STREET, N.W.	PEND POST	HPS	400W	COBRA HEAD, REMOVE POLE AND FIXTURE	
R43-WP	NW CORNER KENNEDY STREET & 2ND STREET, N.W.	WOOD	HPS	400W	COBRA HEAD, REPLACE FIXTURE AND ARM, POLE TO REMAIN	
R44-WP	1ST POLE OF N/S KENNEDY STREET E/O 2ND STREET, N.W.	WOOD	HPS	400W	COBRA HEAD, REPLACE FIXTURE AND ARM, POLE TO REMAIN	
R45-WP	2ND POLE OF N/S KENNEDY STREET E/O 2ND STREET, N.W.	WOOD	HPS	400W	COBRA HEAD, REPLACE FIXTURE AND ARM, POLE TO REMAIN	
R46-WP	3RD POLE OF N/S KENNEDY STREET E/O 2ND STREET, N.W.	WOOD	HPS	400W	COBRA HEAD, REPLACE FIXTURE AND ARM, POLE TO REMAIN	
R47-WP	4TH POLE OF N/S KENNEDY STREET E/O 2ND STREET, N.W.	WOOD	HPS	400W	COBRA HEAD, REPLACE FIXTURE AND ARM, POLE TO REMAIN	
R48-WP	NW CORNER KENNEDY STREET & 1ST STREET, N.W.	WOOD	HPS	400W	COBRA HEAD, REPLACE FIXTURE AND ARM, POLE TO REMAIN	
R49-WP	1ST POLE OF N/S KENNEDY STREET E/O 1ST STREET, N.W.	WOOD	HPS	400W	COBRA HEAD, REPLACE FIXTURE AND ARM, POLE TO REMAIN	
R50-WP	2ND POLE OF N/S KENNEDY STREET E/O 1ST STREET, N.W.	WOOD	HPS	400W	COBRA HEAD, REPLACE FIXTURE AND ARM, POLE TO REMAIN	
R51-WP	3RD POLE OF N/S KENNEDY STREET E/O 1ST STREET, N.W.	WOOD	HPS	400W	COBRA HEAD, REPLACE FIXTURE AND ARM, POLE TO REMAIN	
R52-WP	4TH POLE OF N/S KENNEDY STREET E/O 1ST STREET, N.W.	WOOD	HPS	400W	COBRA HEAD, REPLACE FIXTURE AND ARM, POLE TO REMAIN	
R53-WP	5TH POLE OF N/S KENNEDY STREET E/O 1ST STREET, N.W.	WOOD	HPS	400W	COBRA HEAD, REPLACE FIXTURE AND ARM, POLE TO REMAIN	

LT-18

D.C. DEPARTMENT OF TRANSPORTATION
INFRASTRUCTURE PROJECT MANAGEMENT ADMINISTRATION
PROJECT MANAGEMENT DIVISION

KENNEDY STEET, N.W. IMPROVEMENT
FROM GEORGIA AVENUE TO NORTH CAPITOL STREET

PROJECT ENG. WZ
DESIGNED BY AYY
CHECKED BY MYH
DRAWN BY WZ/YZ
PROJECT MGR. AYY

STREET LIGHTING TABLES – 2

DIVISION CHIEF
DATE
FILE
SHEET 155 OF 173

Precision Systems, Inc.
Engineers, Planners and Architects
WASHINGTON, D.C.

NO.	DESCRIPTION	NAME	DATE

REVISIONS

$PENTBLS$
$PLTDRVS$
P:\60570\lighting\plans\pLT_T002_60570.dgn
Thursday, April 14, 2016 AT 02:45 PM

REG	STATE	PROJECT	SHEET NO.	TOTAL SHEETS
3	D.C.	FAP No. STP-8888(480)	156	173

STREET LIGHT POLE INFORMATION (INSTALLS)

LIGHT NO.	STREETLIGHT ID	LOCATION	POLE TYPE	LIGHT SOURCE	LAMP WATTS	BASE TYPE	REMARKS	DATE IN SERVICE
L01-WP		1ST POLE OF N/S KENNEDY STREET E/O ILLINOIS AVENUE, N.W.	WOOD	LED	150W		TEARDROP	
L02-PP		1ST POLE OF S/S KENNEDY STREET E/O ILLINOIS AVENUE, N.W.	PEND POST	LED	150W	BREAKAWAY	TEARDROP	
L03-PP		2ND POLE OF S/S KENNEDY STREET E/O ILLINOIS AVENUE, N.W.	PEND POST	LED	150W	BREAKAWAY	TEARDROP	
L04-WP		NW CORNER KENNEDY STREET & 9TH STREET, N.W.	WOOD	LED	150W		TEARDROP	
L05-PP		SE CORNER KENNEDY STREET & 9TH STREET, N.W.	PEND POST	LED	150W	BREAKAWAY	TEARDROP	
L06-PP		1ST POLE OF S/S KENNEDY STREET E/O 9TH STREET, N.W.	PEND POST	LED	150W	BREAKAWAY	TEARDROP	
L07-WP		1ST POLE OF N/S KENNEDY STREET E/O 9TH STREET, N.W.	WOOD	LED	150W		TEARDROP	
L08-WP		2ND POLE OF N/S KENNEDY STREET E/O 9TH STREET, N.W.	WOOD	LED	150W		TEARDROP	
L09-PP		SW CORNER KENNEDY STREET & 8TH STREET, N.W.	PEND POST	LED	150W	BREAKAWAY	TEARDROP	
L10-WP		NE CORNER KENNEDY STREET & 8TH STREET, N.W.	WOOD	LED	150W		TEARDROP	
L11-PP		1ST POLE OF S/S KENNEDY STREET E/O 8TH STREET, N.W.	PEND POST	LED	150W	BREAKAWAY	TEARDROP	
L12-WP		1ST POLE OF N/S KENNEDY STREET E/O 8TH STREET, N.W.	WOOD	LED	150W		TEARDROP	
L13-PP		2ND POLE OF S/S KENNEDY STREET E/O 8TH STREET, N.W.	PEND POST	LED	150W	BREAKAWAY	TEARDROP	
L14-PP		SW CORNER KENNEDY STREET & 7TH STREET, N.W.	PEND POST	LED	150W	BREAKAWAY	TEARDROP	
L15-WP		NE CORNER KENNEDY STREET & 7TH STREET, N.W.	WOOD	LED	150W		TEARDROP	
L16-WP		1ST POLE OF N/S KENNEDY STREET E/O 7TH STREET, N.W.	WOOD	LED	150W		TEARDROP	
L17-PP		1ST POLE OF S/S KENNEDY STREET E/O 7TH STREET, N.W.	PEND POST	LED	150W	BREAKAWAY	TEARDROP	
L18-WP		2ND POLE OF N/S KENNEDY STREET E/O 7TH STREET, N.W.	WOOD	LED	150W		TEARDROP	
L19-PP		2ND POLE OF S/S KENNEDY STREET E/O 7TH STREET, N.W.	PEND POST	LED	150W	BREAKAWAY	TEARDROP	
L20-WP		3RD POLE OF N/S KENNEDY STREET E/O 7TH STREET, N.W.	WOOD	LED	150W		TEARDROP	
L21-WP		NW CORNER KENNEDY STREET & 5TH STREET, N.W.	WOOD	LED	150W		TEARDROP	
L22-PP		1ST POLE OF S/S KENNEDY STREET E/O 5TH STREET, N.W.	PEND POST	LED	150W	BREAKAWAY	TEARDROP	
L23-PP		2ND POLE OF S/S KENNEDY STREET E/O 5TH STREET, N.W.	PEND POST	LED	150W	BREAKAWAY	TEARDROP	
L24-WP		1ST POLE OF N/S KENNEDY STREET E/O 5TH STREET, N.W.	WOOD	LED	150W		TEARDROP	
L25-PP		3RD POLE OF S/S KENNEDY STREET E/O 5TH STREET, N.W.	PEND POST	LED	150W	BREAKAWAY	TEARDROP	
L26-WP		NW CORNER KENNEDY STREET & 4TH STREET, N.W.	WOOD	LED	150W		TEARDROP	
L27-PP		SE CORNER KENNEDY STREET & 4TH STREET, N.W.	PEND POST	LED	150W	BREAKAWAY	TEARDROP	
L28-WP		1ST POLE OF N/S KENNEDY STREET E/O 4TH STREET, N.W.	WOOD	LED	150W		TEARDROP	
L29-PP		1ST POLE OF S/S KENNEDY STREET E/O 4TH STREET, N.W.	PEND POST	LED	150W	BREAKAWAY	TEARDROP	
L30-PP		1ST POLE OF S/S KENNEDY STREET E/O 3RD STREET, N.W.	PEND POST	LED	150W	BREAKAWAY	TEARDROP	
L31-PP/TS		SW CORNER KENNEDY STREET & KANSAS AVENUE, N.W.	PEND POST	LED	150W	BREAKAWAY	TEARDROP	
L32-PP/TS		SW CORNER MISSOURI AVENUE & KANSAS AVENUE, N.W.	PEND POST	LED	150W	BREAKAWAY	TEARDROP	
L33-PP/TS		SE CORNER MISSOURI AVENUE & KANSAS AVENUE, N.W.	PEND POST	LED	150W	BREAKAWAY	TEARDROP	
L34-PP/TS		NW CORNER MISSOURI AVENUE & KANSAS AVENUE, N.W.	PEND POST	LED	150W	BREAKAWAY	TEARDROP	
L35-PP/TS		NE CORNER MISSOURI AVENUE & KANSAS AVENUE, N.W.	PEND POST	LED	150W	BREAKAWAY	TEARDROP	
L36-PP		1ST POLE OF N/S MISSOURI AVENUE E/O KANSAS AVENUE, N.W.	PEND POST	LED	150W	BREAKAWAY	TEARDROP	
L37-WP		1ST POLE OF S/S MISSOURI AVENUE E/O KANSAS AVENUE, N.W.	WOOD	LED	150W		TEARDROP	
L38-PP		NW CORNER MISSOURI AVENUE & KENNEDY STREET, N.W.	PEND POST	LED	150W	BREAKAWAY	TEARDROP	
L39-PP		2ND POLE OF S/S MISSOURI AVENUE E/O KANSAS AVENUE, N.W.	PEND POST	LED	150W	BREAKAWAY	TEARDROP	
L40-WP		1ST POLE OF N/S KENNEDY STREET W/O 2ND STREET, N.W.	WOOD	LED	150W		TEARDROP	
L41-PP		1ST POLE OF N/S MISSOURI AVENUE W/O 2ND STREET, N.W.	PEND POST	LED	150W	BREAKAWAY	TEARDROP	
L42-PP		3RD POLE OF S/S MISSOURI AVENUE E/O KANSAS AVENUE, N.W.	PEND POST	LED	150W	BREAKAWAY	TEARDROP	
L43-PP/TS		SW CORNER MISSOURI AVENUE & 2ND STREET, N.W.	PEND POST	LED	150W	BREAKAWAY	TEARDROP	
L44-PP/TS		SE CORNER MISSOURI AVENUE & 2ND STREET, N.W.	PEND POST	LED	150W	BREAKAWAY	TEARDROP	
L45-PP/TS		NW CORNER MISSOURI AVENUE & 2ND STREET, N.W.	PEND POST	LED	150W	BREAKAWAY	TEARDROP	
L46-PP/TS		NE CORNER MISSOURI AVENUE & 2ND STREET, N.W.	PEND POST	LED	150W	BREAKAWAY	TEARDROP	
L47-PP		1ST POLE OF N/S MISSOURI AVENUE E/O 2ND STREET, N.W.	PEND POST	LED	150W	BREAKAWAY	TEARDROP	
L48-WP		NW CORNER KENNEDY STREET & 2ND STREET, N.W.	WOOD	LED	150W		TEARDROP	
L49-PP		1ST POLE OF S/S KENNEDY STREET E/O 2ND STREET, N.W.	PEND POST	LED	150W	BREAKAWAY	TEARDROP	
L50-WP		1ST POLE OF N/S KENNEDY STREET E/O 2ND STREET, N.W.	WOOD	LED	150W		TEARDROP	
L51-PP		2ND POLE OF S/S KENNEDY STREET E/O 2ND STREET, N.W.	PEND POST	LED	150W	BREAKAWAY	TEARDROP	
L52-WP		2ND POLE OF N/S KENNEDY STREET E/O 2ND STREET, N.W.	WOOD	LED	150W		TEARDROP	
L53-PP		3RD POLE OF S/S KENNEDY STREET E/O 2ND STREET, N.W.	PEND POST	LED	150W	BREAKAWAY	TEARDROP	
L54-WP		3RD POLE OF N/S KENNEDY STREET E/O 2ND STREET, N.W.	WOOD	LED	150W		TEARDROP	
L55-PP		4TH POLE OF S/S KENNEDY STREET E/O 2ND STREET, N.W.	PEND POST	LED	150W	BREAKAWAY	TEARDROP	
L56-WP		4TH POLE OF N/S KENNEDY STREET E/O 2ND STREET, N.W.	WOOD	LED	150W		TEARDROP	
L57-PP		5TH POLE OF S/S KENNEDY STREET E/O 2ND STREET, N.W.	PEND POST	LED	150W	BREAKAWAY	TEARDROP	
L58-WP		NW CORNER KENNEDY STREET & 1ST STREET, N.W.	WOOD	LED	150W		TEARDROP	
L59-PP		SE CORNER KENNEDY STREET & 1ST STREET, N.W.	PEND POST	LED	150W	BREAKAWAY	TEARDROP	
L60-WP		1ST POLE OF N/S KENNEDY STREET E/O 1ST STREET, N.W.	WOOD	LED	150W		TEARDROP	
L61-PP		1ST POLE OF S/S KENNEDY STREET E/O 1ST STREET, N.W.	PEND POST	LED	150W	BREAKAWAY	TEARDROP	
L62-WP		2ND POLE OF N/S KENNEDY STREET E/O 1ST STREET, N.W.	WOOD	LED	150W		TEARDROP	
L63-PP		2ND POLE OF S/S KENNEDY STREET E/O 1ST STREET, N.W.	PEND POST	LED	150W	BREAKAWAY	TEARDROP	
L64-WP		3RD POLE OF N/S KENNEDY STREET E/O 1ST STREET, N.W.	WOOD	LED	150W		TEARDROP	
L65-PP		3RD POLE OF S/S KENNEDY STREET E/O 1ST STREET, N.W.	PEND POST	LED	150W	BREAKAWAY	TEARDROP	
L66-WP		4TH POLE OF N/S KENNEDY STREET E/O 1ST STREET, N.W.	WOOD	LED	150W		TEARDROP	
L67-PP		4TH POLE OF S/S KENNEDY STREET E/O 1ST STREET, N.W.	PEND POST	LED	150W	BREAKAWAY	TEARDROP	
L68-WP		5TH POLE OF N/S KENNEDY STREET E/O 1ST STREET, N.W.	WOOD	LED	150W		TEARDROP	

STREETLIGHT MANHOLE INFORMATION (INSTALLS)

MANHOLE NO.	MD GRID PLAT	MD GRID NO.	ACTION REQUIRED
P01	790391	793643	CUT MANHOLE WALL, INSTALL CONDUIT AND CABLES, REPAIR WALL AND CLEAN MANHOLE OF ALL CONSTRUCTION DEBRIS, PEPCO MAKE FINAL CONNECTIONS
P02	790391	793905	CUT MANHOLE WALL, INSTALL CONDUIT, REPAIR WALL AND CLEAN MANHOLE OF ALL CONSTRUCTION DEBRIS, PEPCO TO INSTALL CABLES AND MAKE FINAL CONNECTIONS
P03	790392	850484	INSTALL 4" SWEEP BENDS, INSTALL CABLES AND PVC U-GUARD, PEPCO TO MAKE FINAL CONNECTIONS TO OVERHEAD WIRES

LT-19

Precision Systems, Inc.
Engineers, Planners and Architects
WASHINGTON, D.C.

NO.	DESCRIPTION	NAME	DATE

REVISIONS

D.C. DEPARTMENT OF TRANSPORTATION
INFRASTRUCTURE PROJECT MANAGEMENT ADMINISTRATION
PROJECT MANAGEMENT DIVISION

KENNEDY STEET, N.W. IMPROVEMENT
FROM GEORGIA AVENUE TO NORTH CAPITOL STREET

PROJECT ENG. WZ
DESIGNED BY AYY
CHECKED BY MYH
DRAWN BY WZ/YZ
PROJECT MGR. AYY

STREET LIGHTING TABLES – 3

DIVISION CHIEF
DATE
FILE
SHEET 156 OF 173

p:\60570\lighting\plans\PLT_T003_60570.dgn
Tuesday, July 28, 2015 AT 04:55 PM
$PENTBLS$
$PLTDRVS$

REG	STATE	PROJECT	SHEET NO.	TOTAL SHEETS
3	D.C.	FAP No. STP-8888(480)	157	173

LIGHT STANDARD SCHEDULE				
POLE, ARM AND BASE	LUMINAIRE	LAMPS	GLOBES	REMARKS
30 FT PENDANT POST WITH TRANSFORM BASE	1150 W LED TEARDROP	1150 W LED LAMP	STIPPLED ACRYLIC GLOBE	1 PHOTO CELL

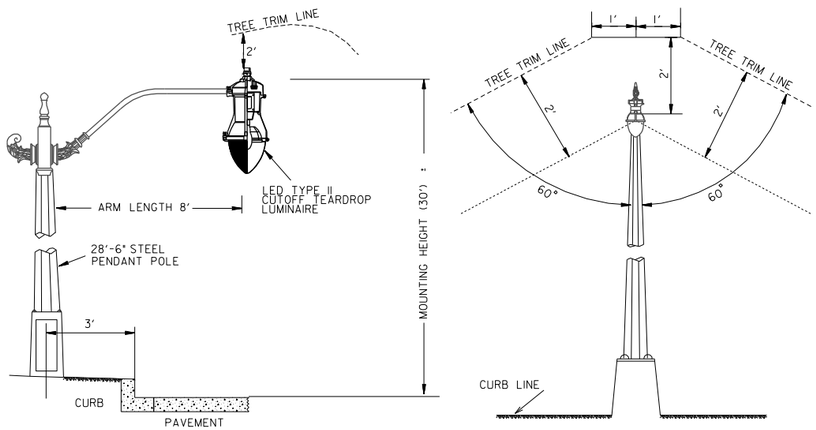

TREE TRIM DETAIL FOR PENDANT POST POLE

NOT TO SCALE

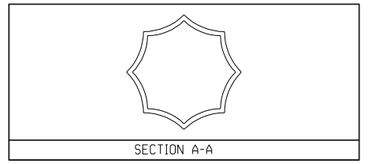

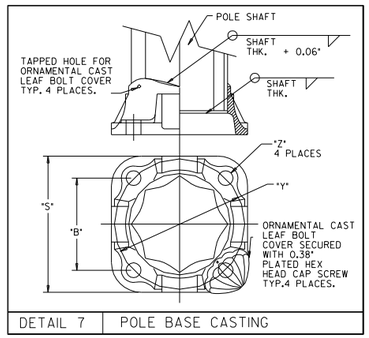

DETAIL 7 | POLE BASE CASTING

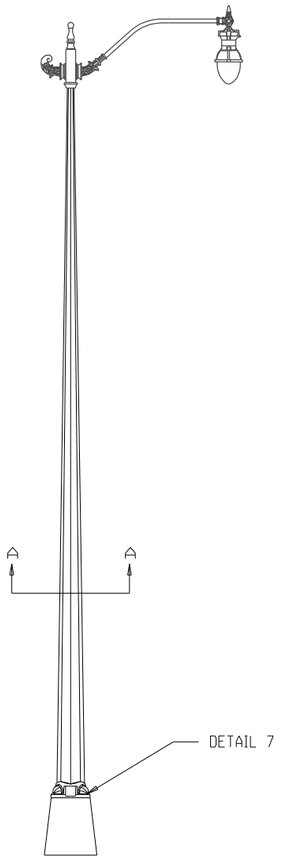

PENDANT POST DETAILS

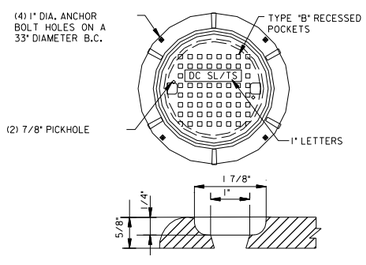

TEAR-DROP LUMINAIRE

NTS

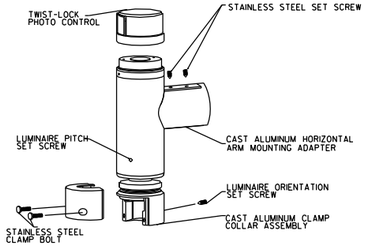

MOUNTING CLAMP/PE RECEPTACLE

NTS

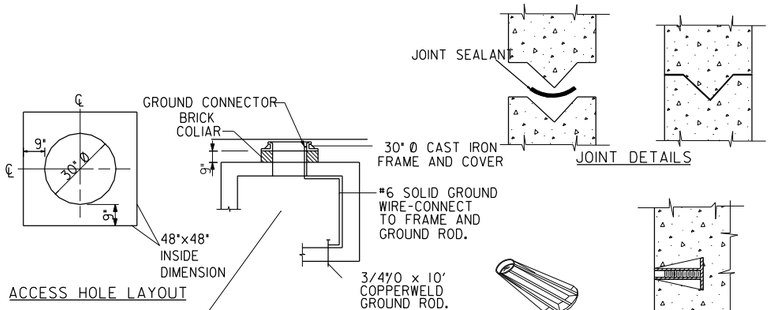

MANHOLE FRAME AND COVER GROUNDING DETAIL

ANCHOR HOLE DETAIL

NOTE:
WHERE MANHOLE IS IN SIDEWALKS, THE COVER SHALL CONFORM WITH SIDEWALK SLOPE, AT ALL OTHER LOCATIONS, IT SHALL BE LEVEL.

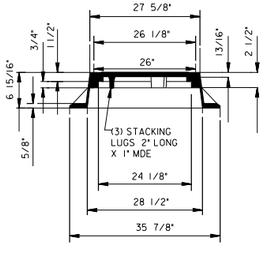

NOTE: ALL DIMENSIONS ARE SHOWN IN ENGLISH
CASTINGS ARE HEAVY DUTY, MEETING AASHTO - M20 LOADING REQUIREMENTS.

MATERIAL: CAST GRAY IRON ASTM A-48, CLASS 35B, AASHTO, M306

FINISH: NOT PAINTED

NOT TO SCALE

THE MANUFACTURERS NAME OR LOGO SHALL NOT BE CAST INTO RING OR COVER

MANHOLE FRAME AND COVER

•4/2" I.D. x 2 3/4" DEEP FLARED TO 11/4" AT BASE.
•THERMOPLASTIC MATERIAL NON-CORROSIVE, CHEMICAL RESISTANT, NON-CONDUCTIVE.
•ULTIMATE STRENGTH BY TEST 12,600 LBS.

BOLTING INSERTS

FOR ATTACHING CABLE RACKS, LADDERS, ETC. TO SIDEWALLS.

LT-20

D.C. DEPARTMENT OF TRANSPORTATION
INFRASTRUCTURE PROJECT MANAGEMENT ADMINISTRATION
PROJECT MANAGEMENT DIVISION

KENNEDY STEET, N.W. IMPROVEMENT
FROM GEORGIA AVENUE TO NORTH CAPITOL STREET

PROJECT ENG. WZ
DESIGNED BY AYY
CHECKED BY MYH
DRAWN BY WZ/YZ
PROJECT MGR. AYY

STREET LIGHTING DETAILS – 1

DIVISION CHIEF
DATE
FILE
SHEET 157 OF 173

Precision Systems, Inc.
Engineers, Planners and Architects
WASHINGTON, D.C.

NO.	DESCRIPTION	NAME	DATE

REVISIONS

p:\60570\lighting\plans\PLT_D001-60570.dgn
Tuesday, July 28, 2015 AT 04:56 PM
$PENTBLS$
$PLTDRVS$

REG	STATE	PROJECT	SHEET NO.	TOTAL SHEETS
3	D.C.	FAP No. STP-8888(480)	158	173

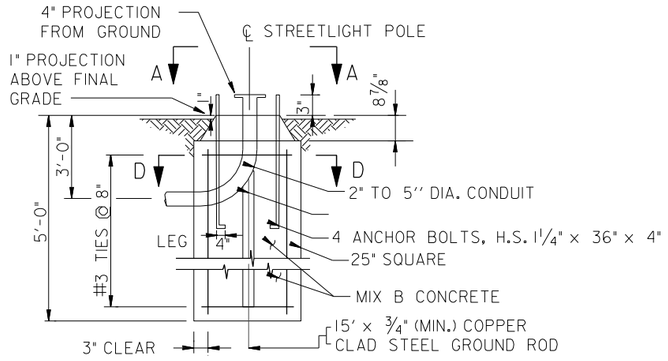

TYPICAL GROUND MOUNTED POLE FOUNDATION

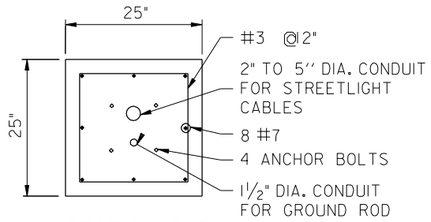

SECTION D-D

CONDUIT ARRANGEMENT FOR PENDANT POLE
STREETLIGHT POLE WITHOUT TRAFFIC SIGNALS

ATTENTION

POLE HEIGHT MUST NOT EXCEED 30'

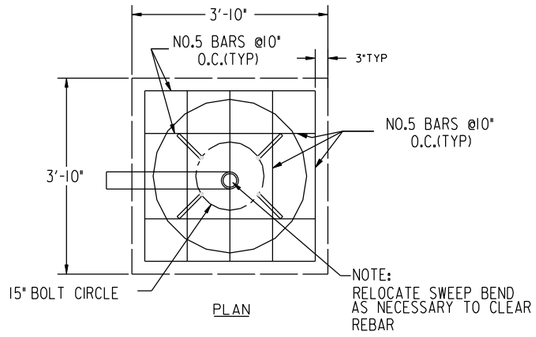

PLAN

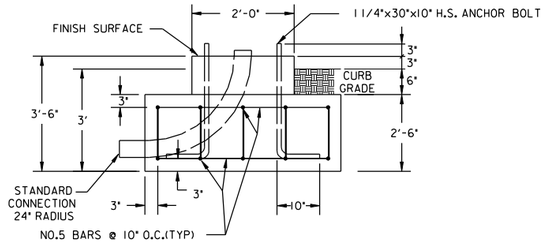

ELEVATION

SPREAD FOOTER FOUNDATION

NOTE:

FOUNDATION CAP TO BE POURED BASED ON POLE TYPE TO BE USED AT THAT LOCATION.

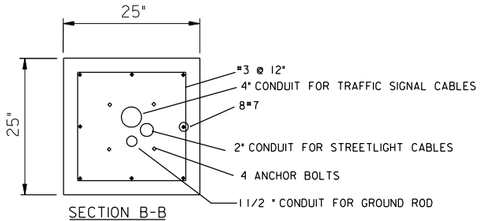

SECTION B-B

NTS

NOTE:
•NO 4" CONDUIT AND 2" CONDUIT TO BE PLACED IN CENTER IN LIGHTING ONLY POLE
•• FOUNDATION CAPS WILL BE 1" MINIMUM ABOVE GROUND.

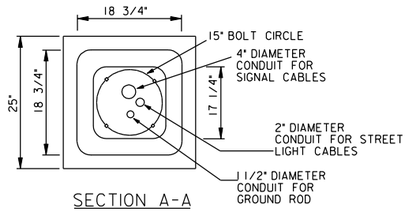

SECTION A-A

NTS
CAP DETAIL FOR PENDANT POST WITH TRAFFIC SIGNALS

NOTE:
USE 1" X 36" X 4" ANCHOR BOLTS FOR ALL FOUNDATIONS FOR #16 AND TWIN-20 POLES

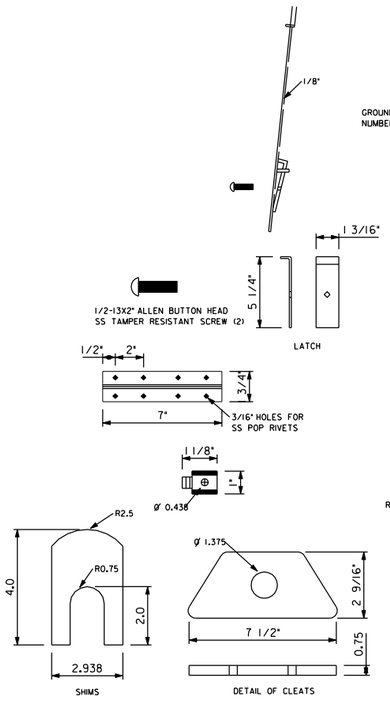

BASE TO BE FURNISHED WITH CONNECTING HARDWARE

4 PCS 1"-8 UNX4" LONG A325 HEX HD BOLTS WITH IPC FLAT WASHER, IPC LOCK WASHER AND HEAVY HEX NUT,H.D. GALVD

LT-21

D.C. DEPARTMENT OF TRANSPORTATION
INFRASTRUCTURE PROJECT MANAGEMENT ADMINISTRATION
PROJECT MANAGEMENT DIVISION

KENNEDY STEET, N.W. IMPROVEMENT
FROM GEORGIA AVENUE TO NORTH CAPITOL STREET

PROJECT ENG. WZ
DESIGNED BY AYY
CHECKED BY MYH
DRAWN BY WZ/YZ
PROJECT MGR. AYY

STREET LIGHTING DETAILS – 2

DIVISION CHIEF
DATE
FILE
SHEET 158 OF 173

Precision Systems, Inc.
Engineers, Planners and Architects
WASHINGTON, D.C.

NO	DESCRIPTION	NAME	DATE

REVISIONS

p:\60570\Lighting\plans\pLT_D002-60570.dgn $PENTBLS$ $PLTDRVS$
Tuesday, July 28, 2015 AT 04:56 PM

REG	STATE	PROJECT	SHEET NO.	TOTAL SHEETS
3	D.C.	FAP No. STP-8888(480)	159	173

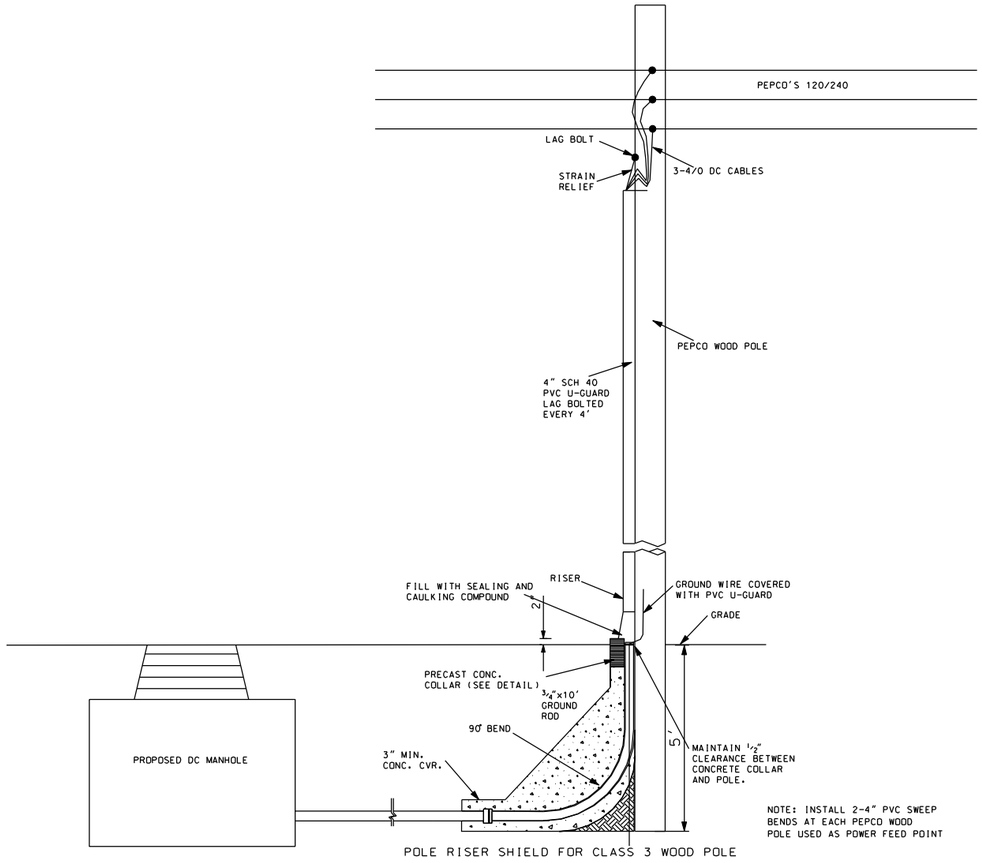

POLE RISER SHIELD FOR CLASS 3 WOOD POLE

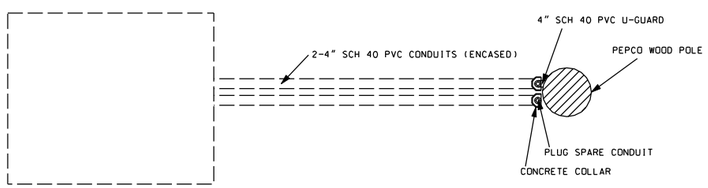

WOOD POLE POWER CONNECTION

NOT TO SCALE

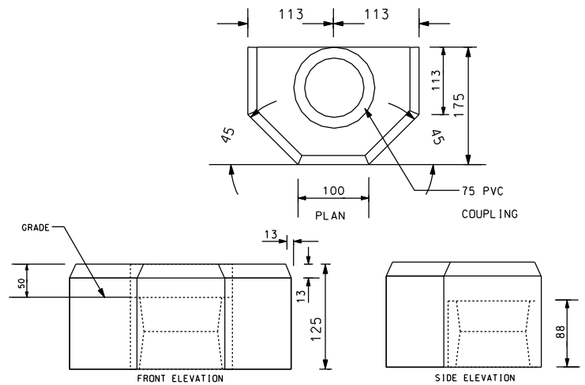

PRECAST CONCRETE COLLAR

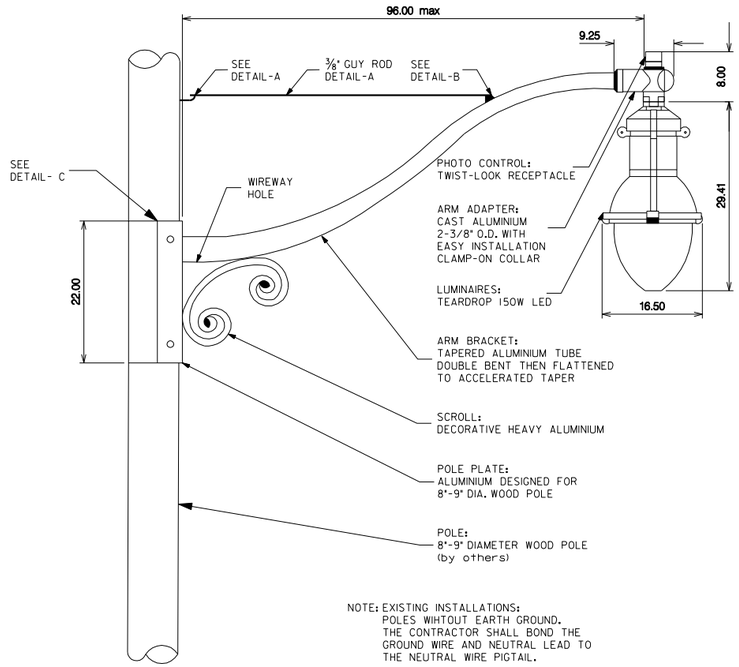

NOTE: EXISTING INSTALLATIONS:
POLES WIHTOUT EARTH GROUND.
THE CONTRACTOR SHALL BOND THE GROUND WIRE AND NEUTRAL LEAD TO THE NEUTRAL WIRE PIGTAIL.

NEW INSTALLATIONS:
POLE WITHOUT EARTH GROUND.
THE CONTRACTOR SHALL LEAVE THE WIRES COILED FOR CONNECTION TO PEPCO'S SECONDARY BY PEPCO FORCES.

DETAIL A

(supplied by others)

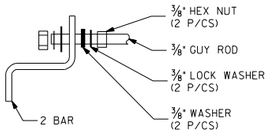

DETAIL B

(supplied by others except where noted)

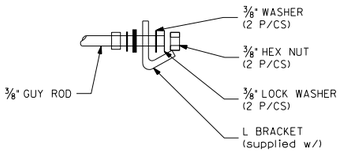

DETAIL C

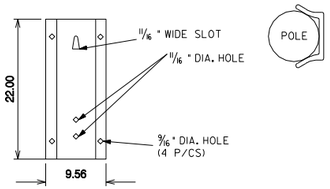

ALUMINIUM LUMINAIRE SUPPORTS

FOR UTILITY POLE MOUNTED LIGHTS
NOT TO SCALE

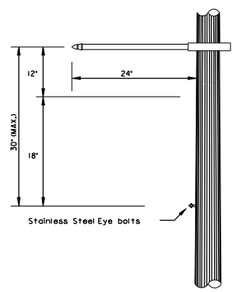

TYPICAL DRAWING FOR BANNER ARMS

LT-22

D.C. DEPARTMENT OF TRANSPORTATION
INFRASTRUCTURE PROJECT MANAGEMENT ADMINISTRATION
PROJECT MANAGEMENT DIVISION

KENNEDY STEET, N.W. IMPROVEMENT
FROM GEORGIA AVENUE TO NORTH CAPITOL STREET

PROJECT ENG. WZ
DESIGNED BY AYY
CHECKED BY MYH
DRAWN BY WZ/YZ
PROJECT MGR. AYY

STREET LIGHTING DETAILS – 3

DIVISION CHIEF
DATE
FILE
SHEET 159 OF 173

Precision Systems, Inc.
Engineers, Planners and Architects
WASHINGTON, D.C.

NO	DESCRIPTION	NAME	DATE

REVISIONS

$PENTBLS$
$PLTDRVS$
p:\60570\lighting\plans\pLT_D003-60570.dgn
Tuesday, July 28, 2015 AT 04:56 PM

REG	STATE	PROJECT	SHEET NO.	TOTAL SHEETS
3	D.C.	FAP No. STP-8888(480)	160	173

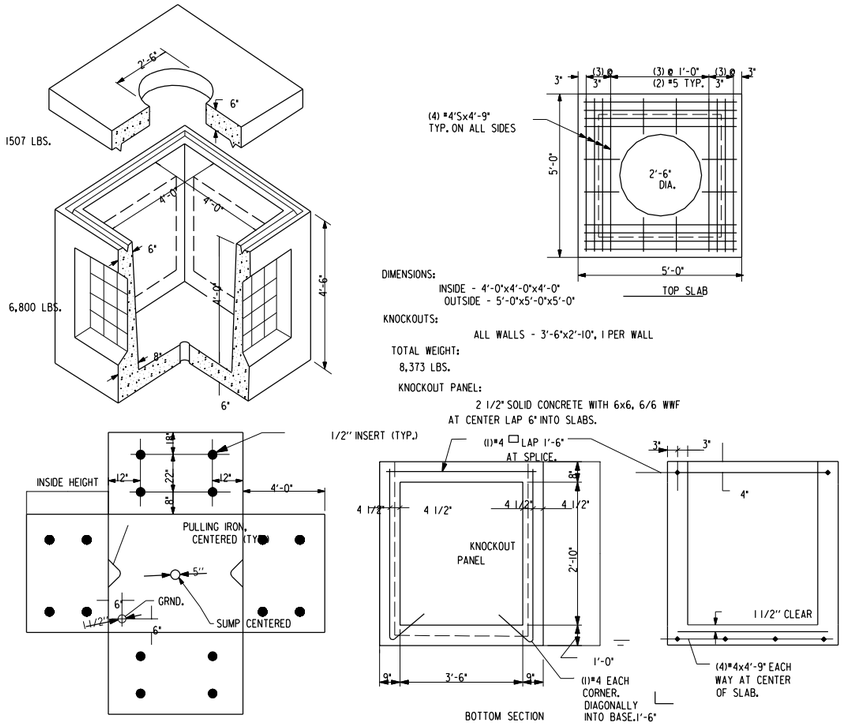

INSERT PLACEMENT SCHEDULE

4' X 4' X 4' MANHOLE

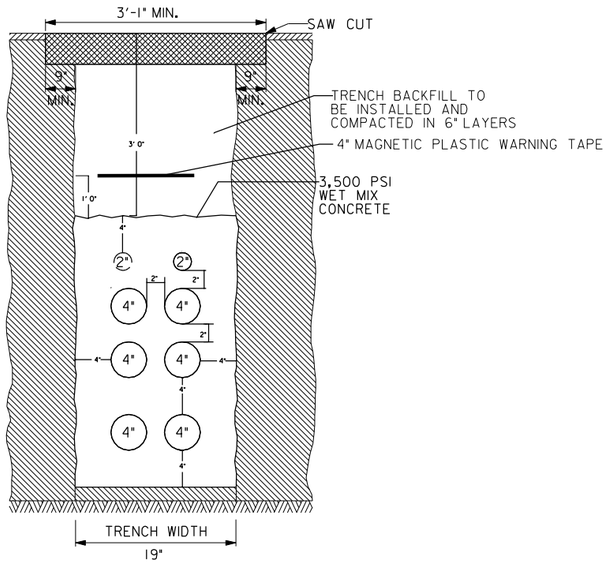

TYPICAL CROSS SECTION OF
STREETLIGHT CONDUIT DUCT BANK

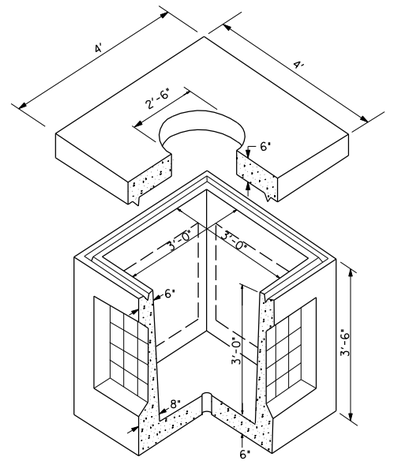

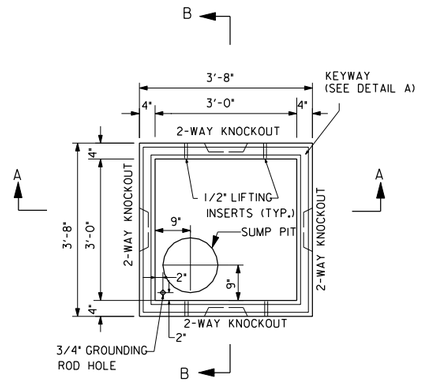

PLAN

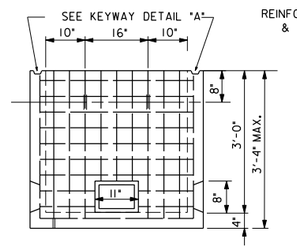

SECTION A-A

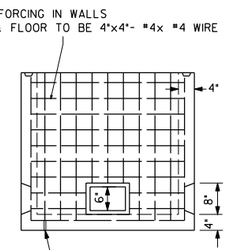

SECTION B-B

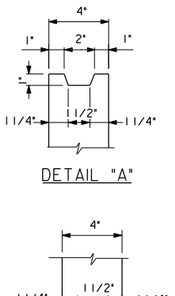

DETAIL "A"

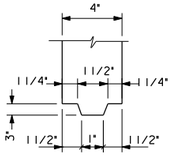

DETAIL "B"

NOTES;
1. CLASS B CONCRETE.
2. HANDHOLE WILL BE DESIGNED FOR MINIMUM H20 LOADING AND SUPPLIER IS TO PROVIDE CERTIFIED DESIGN CALCULATIONS FOR RECORD OR FOR APPROVAL.

DISTRICT MANHOLE MH3
(3' x 3' x 3')

LT-23

D.C. DEPARTMENT OF TRANSPORTATION
INFRASTRUCTURE PROJECT MANAGEMENT ADMINISTRATION
PROJECT MANAGEMENT DIVISION

KENNEDY STEET, N.W. IMPROVEMENT
FROM GEORGIA AVENUE TO NORTH CAPITOL STREET

PROJECT ENG. WZ
DESIGNED BY AYY
CHECKED BY MYH
DRAWN BY WZ/YZ
PROJECT MGR. AYY

STREET LIGHTING DETAILS – 4

DIVISION CHIEF
DATE
FILE
SHEET 160 OF 173

Precision Systems, Inc.
Engineers, Planners and Architects
WASHINGTON, D.C.

NO.	DESCRIPTION	NAME	DATE

REVISIONS

p:\60570\lighting\plans\PLT_D004-60570.dgn
Tuesday, July 28, 2015 AT 04:57 PM
$PLTDRVS$
$PENTBLS$

REVISION								
DESCRIPTION	DATE	COR.	CHK.	APP.	APP.	APP.	APP.	APP.

REG	STATE	PROJECT	SHEET NO.	TOTAL SHEETS
3	D.C.	FAP No. STP-8888(480)	161	173

GENERAL NOTES:

A. ALL WORK RELATING TO THE INSTALLATION OF TRAFFIC SIGNALS SHALL COMPLY WITH APPROPRIATE PROVISIONS OF THE 2009 DDOT STANDARD DRAWINGS, 2013 STANDARD SPECIFICATIONS, AND CONTRACT SPECIAL PROVISIONS.
B. THE CONTRACTOR SHALL SUBMIT TO DDOT CATALOG CUTS FOR ALL MATERIALS TO BE FURNISHED AND INSTALLED. WRITTEN APPROVAL FROM DDOT SHALL BE SECURED PRIOR TO PROCUREMENT.
C. THE CONTRACTOR SHALL FURNISH ALL TEMPORARY, PORTABLE, CONCRETE BASES, TRAFFIC SIGNAL POLES, TRAFFIC AND PEDESTRIAN SIGNAL HEADS, TRANSFORMER BASES AND ALL MOUNTING HARDWARE.
D. THE CONTRACTOR SHALL RETURN ALL REMOVED TRAFFIC SIGNAL EQUIPMENT TO THE DDOT SIGNAL SHOP. CONTACT TRAFFIC SIGNAL SHOP AT LEAST 72 HOURS IN ADVANCE AT 202-905-6059 TO ARRANGE SERVICE.
E. THE EXISTING PEPCO POWER IS TO BE MODIFIED. THE CONTRACTOR SHALL CONTACT PEPCO TO ARRANGE SERVICE AND PAY FEES.
F. THE CONTRACTOR SHALL RELOCATE ALL SIGNS ON EXISTING POLES TO TEMPORARY POLES, UNLESS INDICATED OTHERWISE ON PLAN.
G. NO ABOVE GROUND HARDWARE WILL BE PLACED SUCH THAT A MINIMUM 4' CONTINUOUS PATH FOR ADA PURPOSES IS NOT MAINTAINED.
H. ALL TEMPORARY POLES SHALL BE PROPERLY GROUNDED. DDOT SIGNAL TECHNICIAN WILL NOT ACTIVATE ANY SIGNAL UNLESS POLES ARE PROPERLY GROUNDED.
I. THE CONTRACTOR IS RESPONSIBLE FOR MAINTAINING PROPER ALIGNMENT AND OPERATION OF ALL SIGNALS ON TEMPORARY POLES.
J. NO TEMPORARY CABLES SHALL BE DIRECT BURIED. ALL TEMPORARY CABLING SHALL BE PROPERLY ENCLOSED IN FLEX CONDUIT AND SHALL BE ACCESSIBLE SHOULD EMERGENCY REPLACEMENT BE REQUIRED.

REMOVAL NOTES:

A. REMOVE EXISTING TRAFFIC SIGNAL POLE (ANY TYPE).
B. REMOVE EXISTING PENDANT POST STREETLIGHT POLE.
C. REMOVE EXISTING TRAFFIC SIGNAL HEAD(S).
D. REMOVE EXISTING PEDESTRIAN SIGNAL HEAD(S).
E. REMOVE EXISTING TRAFFIC SIGN(S).

INSTALLATION NOTES:

A. RELOCATE EXISTING TRAFFIC SIGNAL CONTROLLER AND CABINET ONTO A TEMPORARY, PORTABLE, CONCRETE BASE.
B. INSTALL PROPOSED 20-FOOT TRAFFIC SIGNAL POLE WITH A TRANSFORMER BASE ONTO A TEMPORARY, PORTABLE, CONCRETE BASE.
C. INSTALL PROPOSED LED TRAFFIC SIGNAL HEAD(S).
D. INSTALL PROPOSED LED COUNT-DOWN PEDESTRIAN SIGNAL HEAD(S).
E. INSTALL PROPOSED TRAFFIC SIGN(S).

CABLE NOTES:

1. DDOT PERSONNEL WILL MAKE ALL ELECTRICAL CONNECTIONS INSIDE THE CONTROLLER CABINET. THE CONTRACTOR SHALL MAKE ALL ELECTRICAL CONNECTIONS IN TRAFFIC AND PEDESTRIAN SIGNAL HEADS.
2. TEMPORARY SIGNAL CABLES EXTENDING OVER THE GROUND SURFACE SHALL BE PROTECTED BY FLEXIBLE PLASTIC CONDUIT.
3. THE CONTRACTOR SHALL PROVIDE 50 FEET OF SLACK CABLE COILED NEATLY AT EACH TEMPORARY, PORTABLE, CONCRETE BASE.

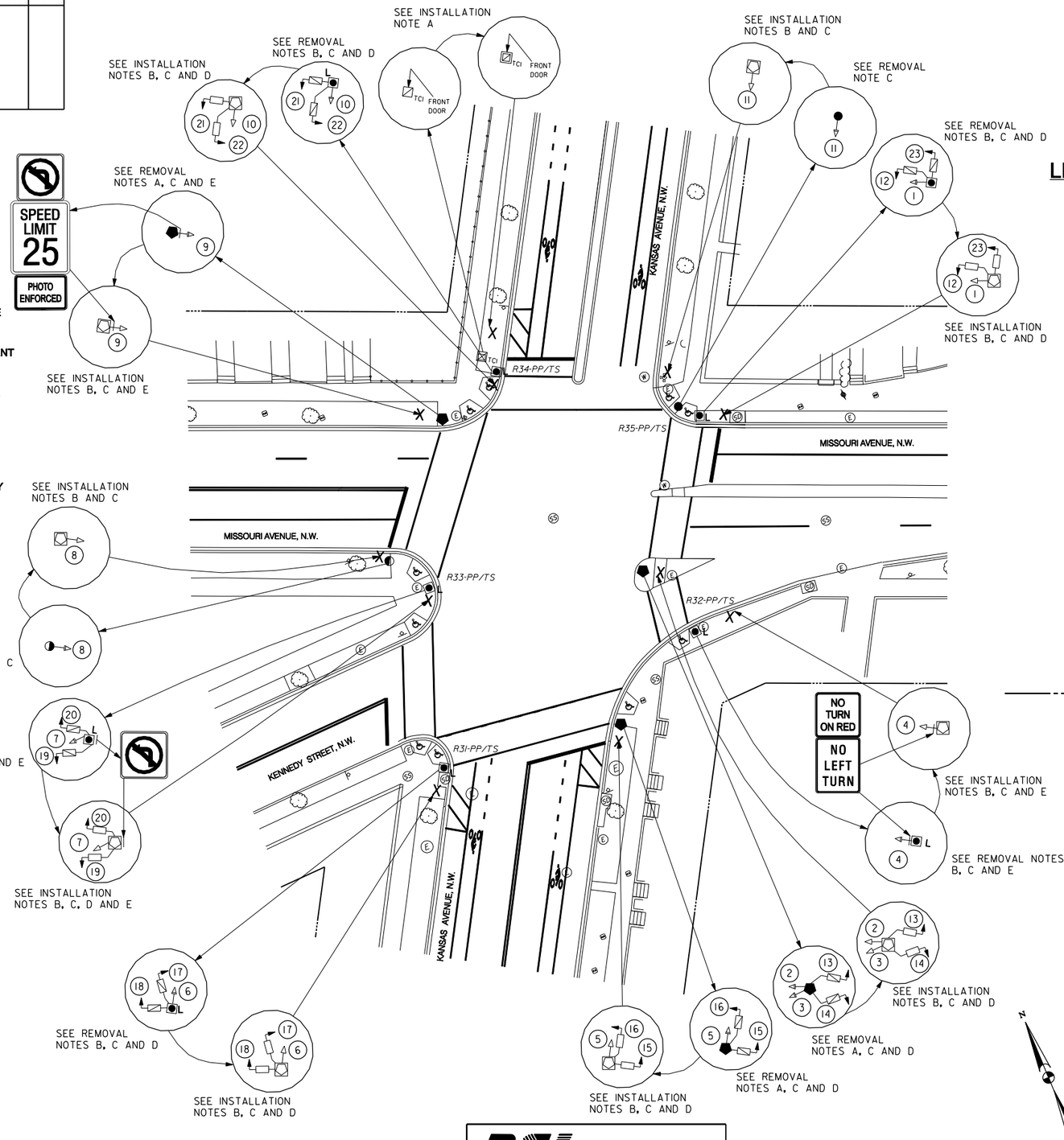

GRAPHIC SCALE

20 10 0 20 40

1" = 20'-0" HORIZ.

LEGEND:

- EXISTING TRAFFIC SIGNAL CONTROLLER
- EXISTING TRAFFIC SIGNAL CONTROLLER MOUNTED ON A TEMPORARY, PORTABLE, CONCRETE BASE
- PROPOSED LOCATION OF A TEMPORARY, PORTABLE, CONCRETE BASE
- EXISTING 28-FOOT PENDANT POST STREETLIGHT POLE WITH LUMINAIRE AND A TRANSFORMER BASE
- EXISTING WOOD POLE
- EXISTING 20-FOOT TRAFFIC SIGNAL POLE WITH A TRANSFORMER BASE
- EXISTING AD-11 TRAFFIC SIGNAL POLE
- PROPOSED 20-FOOT TRAFFIC SIGNAL POLE WITH A TRANSFORMER BASE MOUNTED ON A TEMPORARY, PORTABLE, CONCRETE BASE
- EXISTING 3-SECTION LED TRAFFIC SIGNAL HEAD CONVENTIONAL (ALL LENSES 12 INCHES)
- PROPOSED 3-SECTION LED TRAFFIC SIGNAL HEAD CONVENTIONAL (ALL LENSES 12 INCHES)
- EXISTING 2-SECTION PEDESTRIAN SIGNAL HEAD
- PROPOSED 2-SECTION LED COUNT-DOWN PEDESTRIAN SIGNAL HEAD
- EXISTING WHEELCHAIR RAMP
- EXISTING TREE
- EXISTING CATCH BASIN
- EXISTING TRAFFIC SIGN
- EXISTING SANITARY SEWER MANHOLE
- EXISTING WATER MANHOLE
- EXISTING FIRE HYDRANT
- EXISTING PEPCO ELECTRICAL MANHOLE
- EXISTING GAS VALVE
- EXISTING WATER METER
- R.O.W. RIGHT OF WAY LINE

PSI
Precision Systems, Inc.
Engineers, Planners and Architects
WASHINGTON, D.C.

S.L.F. NO.
APPROVED BY ____ DATE

SEQUENCE OF OPERATION DRAWING NO. TS-249-F

SG-01

DISTRICT OF COLUMBIA
DEPARTMENT OF TRANSPORTATION
INFRASTRUCTURE PROJECT MANAGEMENT ADMINISTRATION

MISSOURI AVENUE, KANSAS AVENUE AND KENNEDY STREET, N.W.
TRAFFIC SIGNAL MODIFICATION

STAGE 1
FIELD CHECKED BY AYY/WZ
DESIGNED BY AYY
DRAWN BY WZ/YZ
REVIEWED BY AYY
DATE 02 /15
SCALE 1" = 20'
SHEET 1 OF 1
DRAWING NO. S-2016-A

SUBMITTED BY ____ PROJECT ENGINEER ____ DATE
RECOMMENDED ____ GROUP MANAGER ____ DATE
APPROVED ____ ITS, SYSTEMS SUPPORT BRANCH MANAGER ____ DATE 4/8/2015
SAFETY, STANDARDS AND DATA ANALYSIS, MANAGER ____ DATE
DEPUTY PROGRAM MANAGER ____ DATE 4/8/2015
PROGRAM MANAGER ____ DATE

p:\60570\for printing\signal\plans\1-Missouri-Kansas-Kennedy NW\pSG-0101-60570-1.dgn
Tuesday, July 28, 2015 AT 04:57 PM

REVISION								
DESCRIPTION	DATE	COR.	CHK.	APP.	APP.	APP.	APP.	APP.

REG	STATE	PROJECT	SHEET NO.	TOTAL SHEETS
3	D.C.	FAP No. STP-8888(480)	162	173

GENERAL NOTES:

A. ALL WORK RELATING TO THE INSTALLATION OF TRAFFIC SIGNALS SHALL COMPLY WITH APPROPRIATE PROVISIONS OF THE 2009 DDOT STANDARD DRAWINGS, 2013 STANDARD SPECIFICATIONS, AND CONTRACT SPECIAL PROVISIONS.
B. THE CONTRACTOR SHALL SUBMIT TO THE DDOT CATALOG CUTS OF ALL EQUIPMENT AND MATERIALS TO BE FURNISHED AND INSTALLED. WRITTEN APPROVAL FROM DDOT SHALL BE SECURED PRIOR TO PROCUREMENT.
C. THE LOCATION OF PROPOSED EQUIPMENT SHOWN IS APPROXIMATE. THE LOCATION OF ALL PROPOSED EQUIPMENT AND MATERIALS SHALL BE FIELD LOCATED, VERIFIED, AND APPROVED BY THE ENGINEER PRIOR TO INSTALLATION.
D. THE CONTRACTOR SHALL FURNISH AND INSTALL ALL PROPOSED CONDUITS, MANHOLES, POLE FOUNDATIONS, AND CONTROLLER CABINET FOUNDATION.
E. THE CONTRACTOR SHALL FURNISH AND INSTALL ALL TRAFFIC AND PEDESTRIAN SIGNAL HEADS, TRAFFIC SIGNAL POLES, TRANSFORMER BASES, APS UNITS, TRAFFIC SIGNAL CONTROLLER, CABINET, AND ALL MOUNTING HARDWARE.
F. THE CONTRACTOR SHALL RETURN ALL REMOVED TRAFFIC SIGNAL EQUIPMENT TO DDOT TRAFFIC SIGNAL SHOP. CONTACT MR. RANDOLPH COPPER 72 HOURS IN ADVANCE AT (202) 905-6059 TO ARRANGE SERVICE.
G. NO ABOVE GROUND HARDWARE OR EQUIPMENT SHALL BE LOCATED SUCH THAT A 4 FEET CLEAR PATH IS NOT AVAILABLE FOR ADA PURPOSES.
H. THE CONTRACTOR MUST COORDINATE ANY INSTALLATION OF CCTV EQUIPMENT AND CABLE WITH DDOT.

INSTALLATION NOTES:

A. INSTALL TRAFFIC SIGNAL CONTROLLER CABINET FOUNDATION.
B. INSTALL TRAFFIC SIGNAL CONTROLLER CABINET.
C. INSTALL TRAFFIC SIGNAL CONTROLLER.
D. INSTALL 20-FOOT TRAFFIC SIGNAL POLE WITH A TRANSFORMER BASE.
E. INSTALL 28-FOOT PENDANT POST STREETLIGHT POLE WITH A TRANSFORMER BASE AND LUMINAIRE.
F. INSTALL 8-FOOT MAST ARM WITH CAP AND CLAMP.
G. INSTALL LED TRAFFIC SIGNAL HEAD(S).
H. INSTALL LED COUNT-DOWN PEDESTRIAN SIGNAL HEAD(S).
I. INSTALL APS UNIT(S).
J. INSTALL TRAFFIC SIGN(S).
K. INSTALL CCTV CAMERA.

MAST ARM NOTES:

A. A BACK PLATE SHALL BE AFFIXED TO EACH MAST ARM MOUNTED SIGNAL HEAD.
B. THE BOTTOM OF MAST ARM MOUNTED SIGNAL HEADS SHALL BE 16 FEET ABOVE THE ROADWAY SURFACE.
C. AN ASTRO-BRAC OR APPROVED EQUIVALENT SHALL BE USED TO MOUNT SIGNAL HEADS (2A, 4A, 6A, 8A, 9A AND 12A) TO MAST ARMS.

CABLE NOTES:

A. DDOT PERSONNEL WILL MAKE ALL ELECTRICAL CONNECTIONS INSIDE THE CONTROLLER CABINET. THE CONTRACTOR SHALL MAKE ALL ELECTRICAL CONNECTIONS IN TRAFFIC AND PEDESTRIAN SIGNAL HEADS.
B. THE CONTRACTOR SHALL FURNISH AND INSTALL NEW, UNSPLICED 7C 14AWG STRANDED CABLE TO ALL SIGNAL HEADS.
C. THE CONTRACTOR SHALL FURNISH AND INSTALL NEW, UNSPLICED SHIELDED 4C 18AWG STRANDED CABLES TO ALL APS UNITS. A SEGMENT OF 4C 18AWG SHIELDED, STRANDED CABLE SHALL EXTEND FROM EACH POLE MOUNTED APS UNIT TO THE 2-SECTION PEDESTRIAN SIGNAL HEAD MOUNTED ON THE SAME POLE.
D. THE CONTRACTOR SHALL FURNISH AND INSTALL NEW 25 PAIR 19AWG COMMUNICATION CABLES.

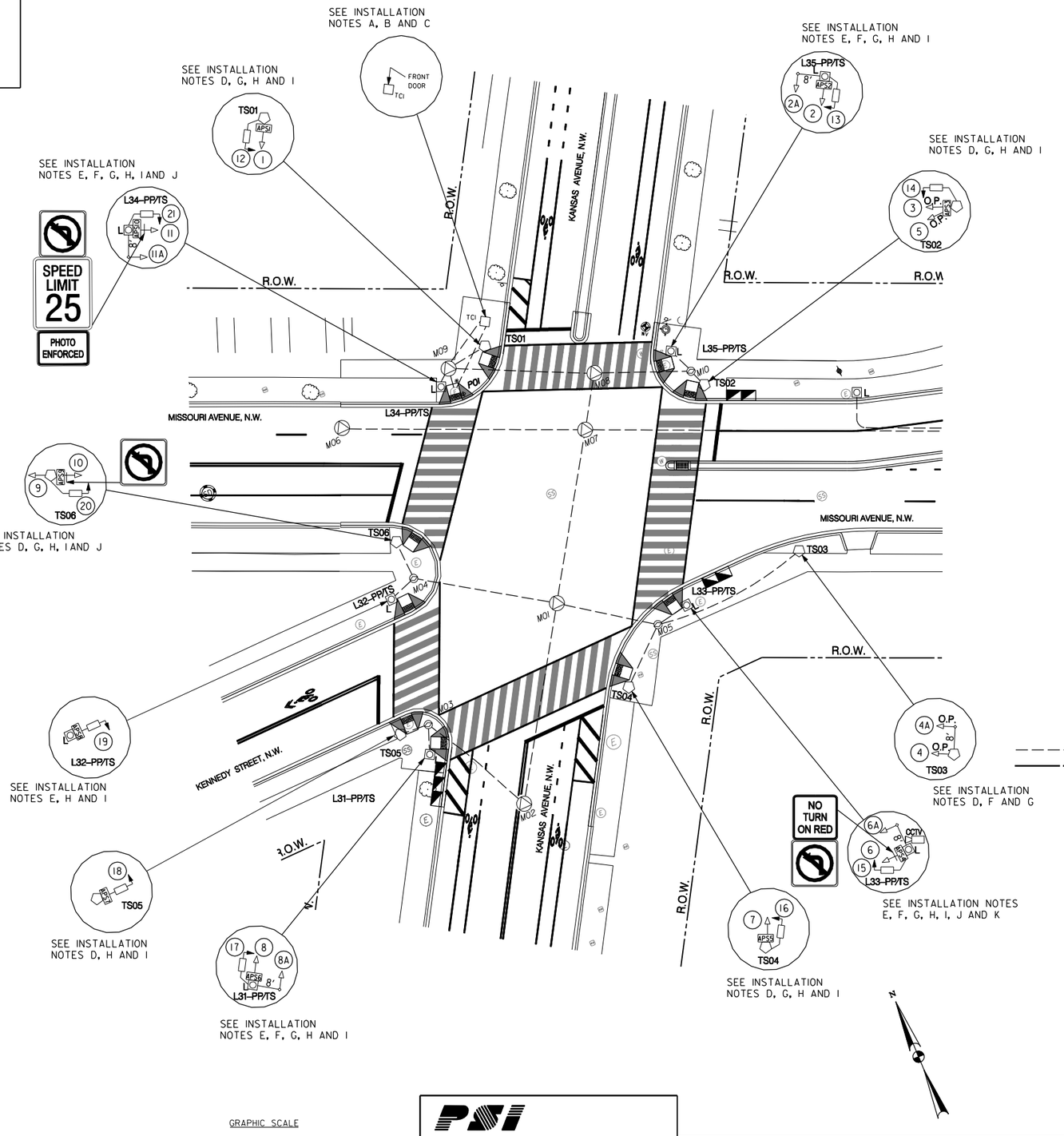

LEGEND:

- PROPOSED TYPE 170E TRAFFIC SIGNAL CONTROLLER WITH A MODEL 336SS CABINET AND AN EXTERNAL UNINTERRUPTED POWER SUPPLY SYSTEM
- PROPOSED 28-FOOT PENDANT POST STREETLIGHT POLE WITH A TRANSFORMER BASE AND LUMINAIRE
- PROPOSED 20-FOOT STEEL TRAFFIC SIGNAL POLE WITH A TRANSFORMER BASE
- PROPOSED 3-SECTION LED TRAFFIC SIGNAL HEAD CONVENTIONAL (ALL LENSES 12 INCHES)
- PROPOSED 3-SECTION OPTICALLY PROGRAMMABLE TRAFFIC SIGNAL HEAD CONVENTIONAL (ALL LENSES 12 INCHES)
- PROPOSED 2-SECTION LED COUNT-DOWN PEDESTRIAN SIGNAL HEAD
- PROPOSED CCTV CAMERA
- PROPOSED ACCESSIBLE PEDESTRIAN SIGNAL (APS)
- PROPOSED 8-FOOT MAST ARM WITH CAP AND CLAMP
- PROPOSED ADA COMPLIANT WHEELCHAIR RAMP
- PROPOSED CATCH BASINS
- PROPOSED STORM DRAINAGE MANHOLE
- EXISTING TRAFFIC SIGN
- EXISTING WATER MANHOLE
- EXISTING SANITARY SEWER MANHOLE
- PROPOSED WATER VALVE
- PROPOSED FIRE HYDRANT
- EXISTING PEPCO ELECTRICAL MANHOLE
- EXISTING WATER METE
- EXISTING TREE
- PROPOSED DDOT MANHOLE (4'X4'X4')
- PROPOSED DDOT MANHOLE (3'X3'X3')
- PROPOSED LOCATION FOR PEPCO POWER CONNECTION
- PROPOSED DDOT ELECTRICAL PVC CONDUIT
- RIGHT OF WAY LINE

SEQUENCE OF OPERATION DRAWING NO. TS-249-G

SG-02

Precision Systems, Inc.
Engineers, Planners and Architects
WASHINGTON, D.C.

S.L.F. NO.
APPROVED BY ____ DATE

DISTRICT OF COLUMBIA
DEPARTMENT OF TRANSPORTATION
INFRASTRUCTURE PROJECT MANAGEMENT ADMINISTRATION

MISSOURI AVENUE, KANSAS AVENUE AND KENNEDY STREET, N.W.
TRAFFIC SIGNAL MODIFICATION

SUBMITTED BY ____ PROJECT ENGINEER ____ DATE
RECOMMENDED ____ GROUP MANAGER ____ DATE
APPROVED ____ ITS, SYSTEMS SUPPORT BRANCH MANAGER ____ DATE 4/8/2015
____ SAFETY, STANDARDS AND DATA ANALYSIS, MANAGER ____ DATE
____ DEPUTY PROGRAM MANAGER ____ DATE 4/8/2015
____ PROGRAM MANAGER ____ DATE

FINAL	
FIELD CHECKED BY	AYWZ
DESIGNED BY	AYY
DRAWN BY	WZYZ
REVIEWED BY	AYY
DATE	02 /15
SCALE	1" = 20'
SHEET / OF	1 / 3
DRAWING NO.	S-2016-B

p:\60570\for printing\signal\plans\I-Missouri-Kansas-Kennedy NW\pSG-PI01-60570-1.dgn
Tuesday, July 28, 2015 AT 04:58 PM

REVISION								
DESCRIPTION	DATE	COR.	CHK.	APP.	APP.	APP.	APP.	APP.

REG	STATE	PROJECT	SHEET NO.	TOTAL SHEETS
3	D.C.	FAP No. STP-8888(480)	163	173

PROPOSED TRAFFIC SIGNAL HEAD CABLE SCHEMATIC

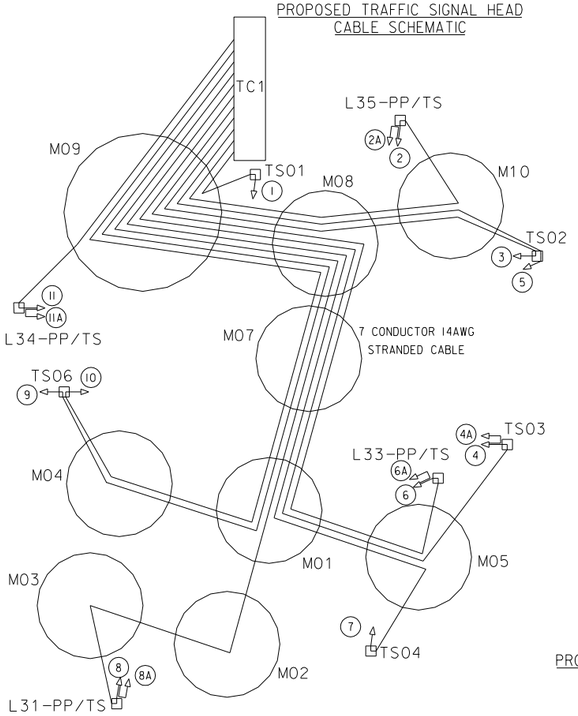

PROPOSED PEDESTRIAN SIGNAL HEAD CABLE SCHEMATIC

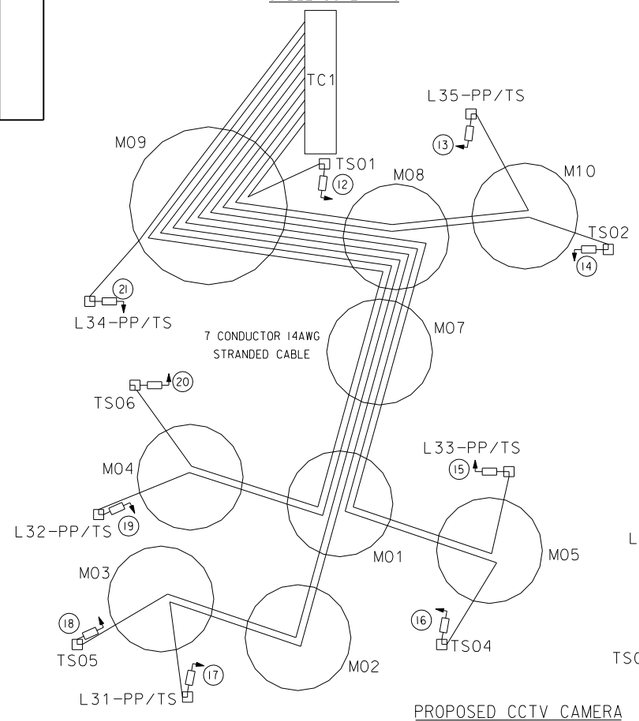

PROPOSED ACCESSIBLE PEDESTRIAN SIGNAL (APS) CABLE SCHEMATIC

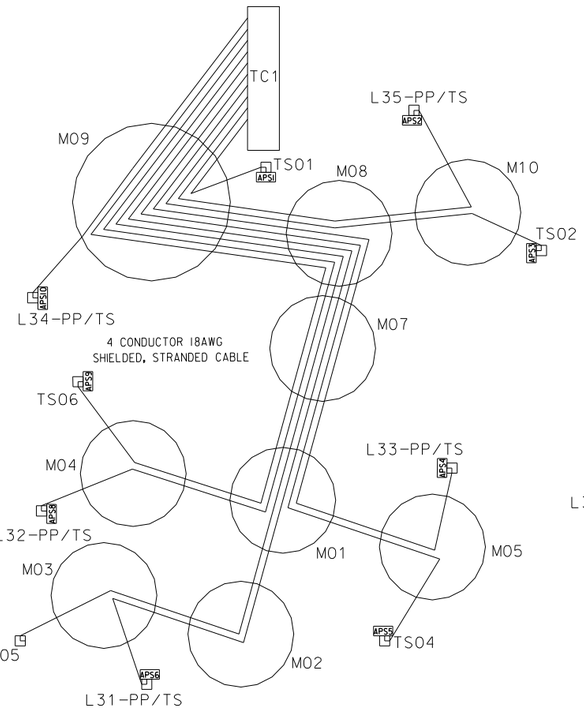

PROPOSED STREETLIGHT CABLE SCHEMATIC

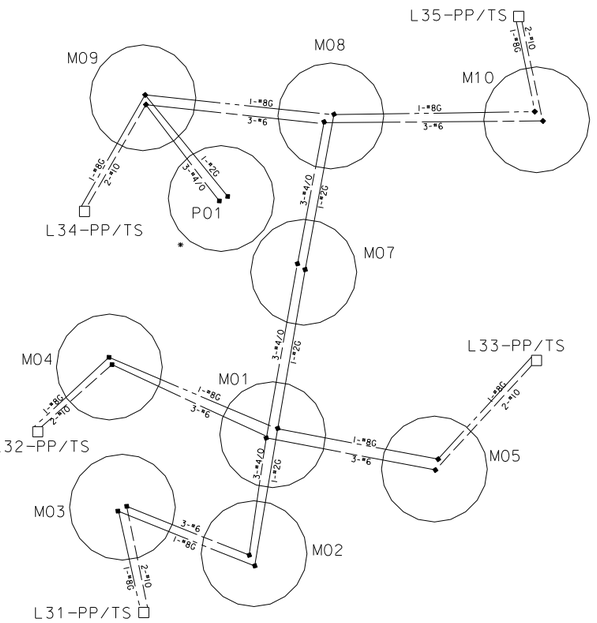

PROPOSED CCTV CAMERA CABLE SCHEMATIC

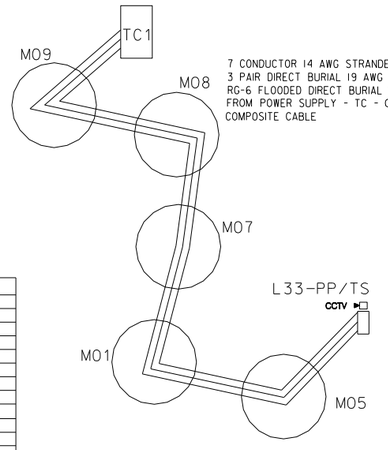

PROPOSED PEDESTRIAN SIGNAL HEAD CABLE ROUTING

TCI - M09 - TS01 - 12
TCI - M09 - M08 - M10 - L35-PP/TS - 13
TCI - M09 - M08 - M10 - TS02 - 14
TCI - M09 - M08 - M07 - M01 - M05 - L33-PP/TS - 15
TCI - M09 - M08 - M07 - M01 - M05 - TS04 - 16
TCI - M09 - M08 - M07 - M01 - M02 - M03 - L31-PP/TS - 17
TCI - M09 - M08 - M07 - M01 - M02 - M03 - TS05 - 18
TCI - M09 - M08 - M07 - M01 - M04 - L32-PP/TS - 19
TCI - M09 - M08 - M07 - M01 - M04 - TS06 - 20
TCI - M09 - L34-PP/TS - 21

PROPOSED TRAFFIC SIGNAL HEAD CABLE ROUTING

TCI - M09 - TS01 - 1
TCI - M09 - M08 - M10 - L35-PP/TS - 2
2 - 2A
TCI - M09 - M08 - M10 - TS02 - 3
TCI - M09 - M08 - M07 - M01 - M05 - TS03 - 4
4 - 4A
TCI - M09 - M08 - M10 - TS02 - 5
TCI - M09 - M08 - M07 - M01 - M05 - L33-PP/TS - 6
6 - 6A
TCI - M09 - M08 - M07 - M01 - M05 - TS04 - 7
TCI - M09 - M08 - M07 - M01 - M02 - M03 - L31-PP/TS - 8
8 - 8A
TCI - M09 - M08 - M07 - M01 - M04 - TS06 - 9
TCI - M09 - M08 - M07 - M01 - M04 - TS06 - 10
TCI - M09 - L34-PP/TS - 11
11 - 11A

PROPOSED CCTV CAMERA CABLE ROUTING

TCI - M09 - M08 - M07 - M01 - M05 - L33-PP/TS - CCTV

7 CONDUCTOR 14 AWG STRANDED CABLE
3 PAIR DIRECT BURIAL 19 AWG TWISTED PAIR RG-6 FLOODED DIRECT BURIAL VIDEO COAX FROM POWER SUPPLY - TC - CCTV CAMERA COMPOSITE CABLE

NOTES:
1. MOUNT POWER SUPPLY ON POLE AT APPROPRIATE LOCATION 12' TO 14' FROM GROUND.
2. MOUNT CAMERA DOME ON MAST ARM AS IS SPECIFIED ON CCTV MOUNTING DETAILS (DDOT STANDARD DRAWING).

PROPOSED ACCESSIBLE PEDESTRIAN SIGNAL (APS) CABLE ROUTING

TCI - M09 - TS01 - APS1
TCI - M09 - M08 - M10 - L35-PP/TS - APS2
TCI - M09 - M08 - M10 - TS02 - APS3
TCI - M09 - M08 - M07 - M01 - M05 - L33-PP/TS - APS4
TCI - M09 - M08 - M07 - M01 - M05 - TS04 - APS5
TCI - M09 - M08 - M07 - M01 - M02 - M03 - L31-PP/TS - APS6
TCI - M09 - M08 - M07 - M01 - M02 - M03 - TS05 - APS7
TCI - M09 - M08 - M07 - M01 - M04 - L32-PP/TS - APS8
TCI - M09 - M08 - M07 - M01 - M04 - TS06 - APS9
TCI - M09 - L34-PP/TS - APS10

PROPOSED STREETLIGHT CABLE ROUTING

POI - M09 - M08 - M07 - M01 - M02 - M03 - L31-PP/TS
POI - M09 - M08 - M07 - M01 - M04 - L32-PP/TS
POI - M09 - M08 - M07 - M01 - M05 - L33-PP/TS
POI - M09 - L34-PP/TS
POI - M09 - M08 - M10 - L35-PP/TS

PROPOSED STREETLIGHT CABLE LEGEND

- NO. 8 STRANDED BARE COPPER GROUND WIRE
- NO. 2 STRANDED BARE COPPER GROUND WIRE
- TWO NO. 10 STRANDED CABLES
- THREE NO. 6 STRANDED CABLES
- THREE NO. 4/0 STRANDED CABLES
- ◆ SPLICE POINT

STATION SCHEDULE		
STATION	STATUS	DESCRIPTION
TCI	PROPOSED	TYPE 170E TRAFFIC SIGNAL CONTROLLER WITH A MODEL 336SS CABINET
M01	PROPOSED	DDOT TRAFFIC SIGNAL MANHOLE (4'x4'x4')
M02	PROPOSED	DDOT TRAFFIC SIGNAL MANHOLE (4'x4'x4')
M03	PROPOSED	DDOT TRAFFIC SIGNAL MANHOLE (3'x3'x3')
M04	PROPOSED	DDOT TRAFFIC SIGNAL MANHOLE (3'x3'x3')
M05	PROPOSED	DDOT TRAFFIC SIGNAL MANHOLE (3'x3'x3')
M07	PROPOSED	DDOT TRAFFIC SIGNAL MANHOLE (4'x4'x4')
M08	PROPOSED	DDOT TRAFFIC SIGNAL MANHOLE (4'x4'x4')
M09	PROPOSED	DDOT TRAFFIC SIGNAL MANHOLE (4'x4'x4')
M10	PROPOSED	DDOT TRAFFIC SIGNAL MANHOLE (3'x3'x3')
POI	EXISTING	PEPCO MANHOLE
TS01	PROPOSED	20-FOOT TRAFFIC SIGNAL POLE WITH A TRANSFORMER BASE
TS02	PROPOSED	20-FOOT TRAFFIC SIGNAL POLE WITH A TRANSFORMER BASE
TS03	PROPOSED	20-FOOT TRAFFIC SIGNAL POLE WITH A TRANSFORMER BASE AND AN 8-FOOT MAST ARM
TS04	PROPOSED	20-FOOT TRAFFIC SIGNAL POLE WITH A TRANSFORMER BASE
TS05	PROPOSED	20-FOOT TRAFFIC SIGNAL POLE WITH A TRANSFORMER BASE
TS06	PROPOSED	20-FOOT TRAFFIC SIGNAL POLE WITH A TRANSFORMER BASE
L31-PP/TS	PROPOSED	28-FOOT STEEL PENDANT POST STREETLIGHT POLE WITH LUMINAIRE, AN 8-FOOT MAST ARM AND A TRANSFORMER BASE
L32-PP/TS	PROPOSED	28-FOOT STEEL PENDANT POST STREETLIGHT POLE WITH LUMINAIRE AND A TRANSFORMER BASE
L33-PP/TS	PROPOSED	28-FOOT STEEL PENDANT POST STREETLIGHT POLE WITH LUMINAIRE, AN 8-FOOT MAST ARM AND A TRANSFORMER BASE
L34-PP/TS	PROPOSED	28-FOOT STEEL PENDANT POST STREETLIGHT POLE WITH LUMINAIRE, AN 8-FOOT MAST ARM AND A TRANSFORMER BASE
L35-PP/TS	PROPOSED	28-FOOT STEEL PENDANT POST STREETLIGHT POLE WITH LUMINAIRE, AN 8-FOOT MAST ARM AND A TRANSFORMER BASE

CONDUIT SUMMARY				
LOCATION TO LOCATION	STATUS	SIZE (DIA.) (IN)	NUMBER OF CONDUITS	QUANTITY (FT)
POI - TCI	PROPOSED	2	1	26
POI - M09	PROPOSED	2,4	4	8
TCI - M09	PROPOSED	2,4	1,2	20
M09 - M08	PROPOSED	4	4	48
M08 - M10	PROPOSED	4	4	32
M08 - M07	PROPOSED	4	6	19
M07 - M01	PROPOSED	4	6	59
M01 - M02	PROPOSED	4	6	71
M01 - M04	PROPOSED	4	4	48
M01 - M05	PROPOSED	4	4	35
M02 - M03	PROPOSED	4	4	44
M09 - TS01	PROPOSED	2,4	1,1	14
M10 - TS02	PROPOSED	2,4	1,1	7
M05 - TS03	PROPOSED	2,4	1,1	53
M05 - TS04	PROPOSED	2,4	1,1	23
M03 - TS05	PROPOSED	2,4	1,1	11
M04 - TS06	PROPOSED	2,4	1,1	14
M03 - L31-PP/TS	PROPOSED	2,4	1,1	10
M04 - L32-PP/TS	PROPOSED	2,4	1,1	11
M05 - L33-PP/TS	PROPOSED	2,4	1,1	12
M09 - L34-PP/TS	PROPOSED	2,4	1,1	7
M10 - L35-PP/TS	PROPOSED	2,4	1,1	10

STREETLIGHT POLE INFORMATION (POLE INSTALLATION)						
DRAWING LIGHT NO.	MARYLAND GRID PLAT	LOCATION	TYPE OF POLE	LIGHT SOURCE	LAMP WATTS	DATE IN SERVICE
L31-PP/TS		SW COR. OF KENNEDY ST. AND MISSOURI AVE.	PEND POST	LED	150W	
L32-PP/TS		SW COR. OF KANSAS AVE. AND MISSOURI AVE.	PEND POST	LED	150W	
L33-PP/TS		SE COR. OF KANSAS AVE. AND MISSOURI AVE.	PEND POST	LED	150W	
L34-PP/TS		NW COR. OF KANSAS AVE. AND MISSOURI AVE.	PEND POST	LED	150W	
L35-PP/TS		NE COR. OF KANSAS AVE. AND MISSOURI AVE.	PEND POST	LED	150W	

STREETLIGHT POLE INFORMATION (POLE REMOVAL)						
DRAWING LIGHT NO.	MARYLAND GRID PLAT	LOCATION	TYPE OF POLE	LIGHT SOURCE	LAMP WATTS	DATE IN SERVICE
R31-PP/TS		SW COR. OF KANSAS AVE. AND KENNEDY ST.	PEND POST	HPS	400W	
R32-PP/TS		SW COR. OF KANSAS AVE. AND MISSOURI AVE.	PEND POST	HPS	400W	
R33-PP/TS		SE COR. OF KANSAS AVE. AND MISSOURI AVE.	PEND POST	HPS	400W	
R34-PP/TS		NW COR. OF KANSAS AVE. AND MISSOURI AVE.	PEND POST	HPS	400W	
R35-PP/TS		NE COR. OF KANSAS AVE. AND MISSOURI AVE.	PEND POST	HPS	400W	

STREETLIGHT CABLE SUMMARY							
SCHEDULE			QUANTITY				
			CABLE			GROUNDING	
FROM STA.	TO STA.	DISTANCE	#4/0	#6	#10	#2	#8
POI	M09	8	54			18	
M09	M08	48		177			59
M08	M10	32		126			42
M08	M07	19	87			29	
M07	M01	59	207			69	
M01	M04	48		174			58
M01	M05	35		135			45
M01	M02	65	225			75	
M02	M03	40		150			50
M03	L31-PP/TS	10			40		20
M04	L32-PP/TS	11			42		21
M05	L33-PP/TS	12			44		22
M09	L34-PP/TS	7			34		17
M10	L35-PP/TS	10			40		20
TOTAL		N/A	573	762	200	191	354

PSI
Precision Systems, Inc.
Engineers, Planners and Architects
WASHINGTON, D.C.

S.L.F. NO.

APPROVED BY _____ DATE

SEQUENCE OF OPERATION DRAWING NO. TS-249-G

SG-03

DISTRICT OF COLUMBIA
DEPARTMENT OF TRANSPORTATION
INFRASTRUCTURE PROJECT MANAGEMENT ADMINISTRATION

MISSOURI AVENUE, KANSAS AVENUE AND KENNEDY STREET, N.W.
TRAFFIC SIGNAL MODIFICATION

SUBMITTED BY _____ PROJECT ENGINEER DATE

RECOMMENDED _____ GROUP MANAGER DATE

APPROVED _____ ITS, SYSTEMS SUPPORT BRANCH MANAGER DATE 4/8/2015
SAFETY, STANDARDS AND DATA ANALYSIS, MANAGER DATE

_____ DEPUTY PROGRAM MANAGER DATE 4/8/2015
PROGRAM MANAGER DATE

FINAL	
FIELD CHECKED BY	AYY/WZ
DESIGNED BY	AYY
DRAWN BY	WZY/Z
REVIEWED BY	AYY
DATE	02 /15
SCALE	N.T.S.
SHEET / OF	2 / 3
DRAWING NO.	S-2016-B

p:\60570\for printing\signal\plans\I-Missouri-Kansas-Kennedy NW\pSG-P102-60570-I.dgn
Tuesday, July 28, 2015 AT 04:58 PM

REVISION								
DESCRIPTION	DATE	COR.	CHK.	APP.	APP.	APP.	APP.	APP.

REG	STATE	PROJECT	SHEET NO.	TOTAL SHEETS
3	D.C.	FAP No. STP-8888(480)	164	173

GENERAL NOTES:

1. THE LOCATION OF UTILITIES SHOWN ON THE PLANS ARE BASED ON FIELD SURVEY DATA AND/OR RECORD DRAWINGS. THE LOCATION OF UTILITIES SHOWN IS APPROXIMATE AND THE INFORMATION SHOWN IS NOT NECESSARILY COMPLETE. IT SHALL BE THE RESPONSIBILITY OF THE CONTRACTOR TO VERIFY THE EXISTENCE OF ALL UTILITIES WELL IN ADVANCE OF CONDUCTING CONSTRUCTION OPERATIONS WHICH COULD DAMAGE THESE FACILITIES. IN AREAS WHERE PROPOSED CONSTRUCTION MAY CONFLICT WITH EXISTING UTILITIES, THE CONTRACTOR SHALL TAKE ALL NECESSARY PRECAUTIONS TO AVOID DAMAGE TO EXISTING UTILITIES. IF A UTILITY IS DAMAGED, THE CONTRACTOR SHALL IMMEDIATELY NOTIFY THE ENGINEER AND THE OWNER OF SAID UTILITY. ANY DAMAGE SUSTAINED TO UTILITIES ABOVE OR BELOW THE GROUND SHALL BE REPAIRED BY OR UNDER THE DIRECTION OF THE OWNER AT CONTRACTOR'S EXPENSE. UNDER NO CIRCUMSTANCE SHALL THE CONTRACTOR BACKFILL AN EXCAVATION AFFECTING SAID UTILITY WITHOUT FIRST RECEIVING PERMISSION FROM THE UTILITY OWNER.
2. THE CONTRACTOR SHALL EXCAVATE AND LOCATE VERTICALLY AND HORIZONTALLY ALL UTILITIES IN CLOSE PROXIMITY TO THE PROPOSED TRAFFIC SIGNAL WORK AREA AS NECESSARY FOR CONSTRUCTION.
3. THE CONTRACTOR SHALL NOTIFY MISS UTILITY AT 1-800-257-7777, 48 HOURS PRIOR TO EXCAVATING.
4. THE CONTRACTOR SHALL MAINTAIN A MINIMUM 2 FOOT HORIZONTAL CLEARANCE TO ALL UTILITIES DURING CONSTRUCTION.
5. CONTRACTOR SHALL FURNISH AND INSTALL ALL PROPOSED CONDUITS.

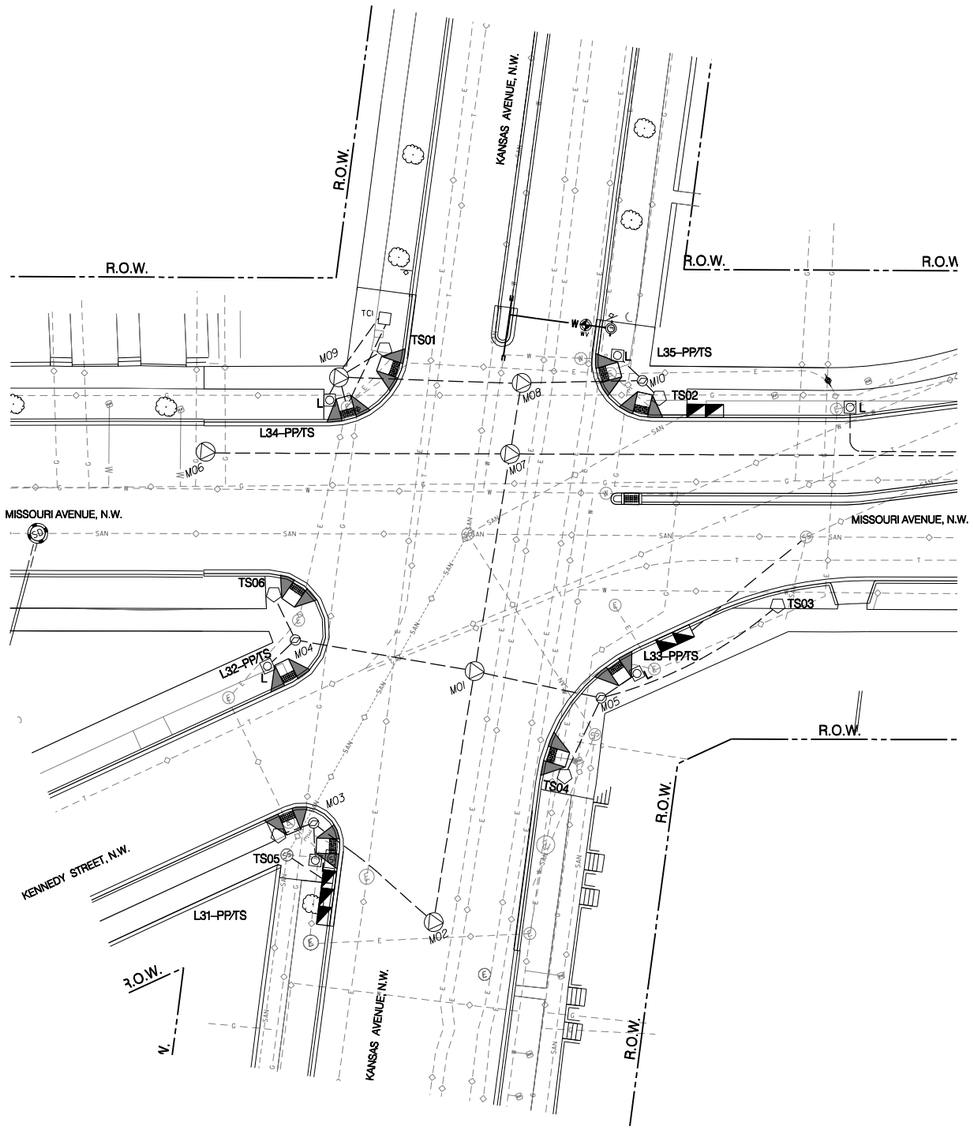

LEGEND:

- PROPOSED TYPE 170E TRAFFIC SIGNAL CONTROLLER WITH A MODEL 336SS CABINET AND AN EXTERNAL UNINTERRUPTED POWER SUPPLY SYSTEM
- PROPOSED 28-FOOT PENDANT POST STREETLIGHT POLE WITH A TRANSFORMER BASE AND LUMINAIRE
- PROPOSED 20-FOOT STEEL TRAFFIC SIGNAL POLE WITH A TRANSFORMER BASE
- PROPOSED ADA COMPLIANT WHEELCHAIR RAMP
- PROPOSED CATCH BASINS
- PROPOSED STORM DRAINAGE MANHOLE
- EXISTING TRAFFIC SIGN
- EXISTING WATER MANHOLE
- EXISTING SANITARY SEWER MANHOLE
- PROPOSED WATER VALVE
- PROPOSED FIRE HYDRANT
- EXISTING PEPCO ELECTRICAL MANHOLE
- EXISTING WATER METE
- EXISTING TREE
- PROPOSED DDOT MANHOLE (4'X4'X4')
- PROPOSED DDOT MANHOLE (3'X3'X3')
- PROPOSED LOCATION FOR PEPCO POWER CONNECTION
- EXISTING PEPCO ELECTRICAL LINE (FROM RECORD)
- EXISTING SANITARY LINE (FROM RECORD)
- EXISTING WATER LINE (FROM RECORD)
- EXISTING TELEPHONE LINE (FROM RECORD)
- EXISTING GAS LINE (FROM RECORD)
- PROPOSED WATER LINE
- PROPOSED STORMDRAIN CONNECTION PIPE
- PROPOSED DDOT ELECTRICAL PVC CONDUIT
- RIGHT OF WAY LINE

GRAPHIC SCALE

20 10 0 20 40

1" = 20'-0" HORIZ.

Precision Systems, Inc.
Engineers, Planners and Architects
WASHINGTON, D.C.

S.L.F. NO.

APPROVED BY DATE

SEQUENCE OF OPERATION DRAWING NO. TS-249-G

SG-04

DISTRICT OF COLUMBIA
DEPARTMENT OF TRANSPORTATION
INFRASTRUCTURE PROJECT MANAGEMENT ADMINISTRATION

MISSOURI AVENUE, KANSAS AVENUE AND KENNEDY STREET, N.W.
TRAFFIC SIGNAL MODIFICATION

SUBMITTED BY _____ PROJECT ENGINEER _____ DATE

RECOMMENDED _____ GROUP MANAGER _____ DATE

APPROVED _____ ITS, SYSTEMS SUPPORT BRANCH MANAGER _____ DATE 4/8/2015
SAFETY, STANDARDS AND DATA ANALYSIS, MANAGER _____ DATE

_____ DEPUTY PROGRAM MANAGER _____ DATE
_____ PROGRAM MANAGER _____ DATE 4/8/2015

	FINAL
FIELD CHECKED BY	AYY/WZ
DESIGNED BY	AYY
DRAWN BY	WZ/YZ
REVIEWED BY	AYY
DATE	02 /15
SCALE	1" = 20'
SHEET / OF	3 / 3
DRAWING NO.	S-2016-B

p:\60570\for printing\signal\plans\1-Missouri-Kansas-Kennedy NW\pSG-P103-60570-1.dgn
Tuesday, July 28, 2015 AT 04:59 PM

REVISION								
DESCRIPTION	DATE	COR.	CHK.	APP.	APP.	APP.	APP.	APP.

REG	STATE	PROJECT	SHEET NO.	TOTAL SHEETS
3	D.C.	FAP No. STP-8888(480)	165	173

GENERAL NOTES:

A. ALL WORK RELATING TO THE INSTALLATION OF TRAFFIC SIGNALS SHALL COMPLY WITH APPROPRIATE PROVISIONS OF THE 2009 DDOT STANDARD DRAWINGS, 2013 STANDARD SPECIFICATIONS, AND CONTRACT SPECIAL PROVISIONS.
B. THE CONTRACTOR SHALL SUBMIT TO DDOT CATALOG CUTS FOR ALL MATERIALS TO BE FURNISHED AND INSTALLED. WRITTEN APPROVAL FROM DDOT SHALL BE SECURED PRIOR TO PROCUREMENT.
C. THE CONTRACTOR SHALL FURNISH ALL TEMPORARY, PORTABLE, CONCRETE BASES, TRAFFIC SIGNAL POLES, TRAFFIC AND PEDESTRIAN SIGNAL HEADS, TRANSFORMER BASES AND ALL MOUNTING HARDWARE.
D. THE CONTRACTOR SHALL RETURN ALL REMOVED TRAFFIC SIGNAL EQUIPMENT TO THE DDOT SIGNAL SHOP. CONTACT TRAFFIC SIGNAL SHOP AT LEAST 72 HOURS IN ADVANCE AT 202-905-8059 TO ARRANGE SERVICE.
E. THE EXISTING PEPCO POWER IS TO BE MODIFIED. THE CONTRACTOR SHALL CONTACT PEPCO TO ARRANGE SERVICE AND PAY FEES.
F. THE CONTRACTOR SHALL RELOCATE ALL SIGNS ON EXISTING POLES TO TEMPORARY POLES, UNLESS INDICATED OTHERWISE ON PLAN.
G. NO ABOVE GROUND HARDWARE WILL BE PLACED SUCH THAT A MINIMUM 4' CONTINUOUS PATH FOR ADA PURPOSES IS NOT MAINTAINED.
H. ALL TEMPORARY POLES SHALL BE PROPERLY GROUNDED. DDOT SIGNAL TECHNICIAN WILL NOT ACTIVATE ANY SIGNAL UNLESS POLES ARE PROPERLY GROUNDED.
I. THE CONTRACTOR IS RESPONSIBLE FOR MAINTAINING PROPER ALIGNMENT AND OPERATION OF ALL SIGNALS ON TEMPORARY POLES.
J. NO TEMPORARY CABLES SHALL BE DIRECT BURIED. ALL TEMPORARY CABLING SHALL BE PROPERLY ENCLOSED IN FLEX CONDUIT AND SHALL BE ACCESSIBLE SHOULD EMERGENCY REPLACEMENT BE REQUIRED.
K. THE TEMPORARY CONDUIT ENTRY INTO THE TEMPORARY, PORTABLE CONCRETE BASE OF THE TRAFFIC SIGNAL CONTROLLER IS TO BE AT THE SIDE OF THE BASE RATHER THAN THE BOTTOM.

REMOVAL NOTES:

A. REMOVE EXISTING TRAFFIC SIGNAL POLE (ANY TYPE).
B. REMOVE EXISTING PENDANT POST STREETLIGHT POLE.
C. REMOVE EXISTING TRAFFIC SIGNAL HEAD(S).
D. REMOVE EXISTING PEDESTRIAN SIGNAL HEAD(S).
E. REMOVE EXISTING MICROWAVE VEHICLE DETECTOR.
F. REMOVE EXISTING PEDESTRIAN PUSH BUTTON AND SIGN.
G. REMOVE EXISTING TRAFFIC SIGN(S).
H. REMOVE EXISTING 8-FOOT LONG MAST ARM WITH CAP AND CLAMP.

INSTALLATION NOTES:

A. RELOCATE EXISTING TRAFFIC SIGNAL CONTROLLER AND CABINET ONTO A TEMPORARY, PORTABLE, CONCRETE BASE.
B. INSTALL PROPOSED 20-FOOT TRAFFIC SIGNAL POLE WITH A TRANSFORMER BASE ONTO A TEMPORARY, PORTABLE, CONCRETE BASE.
C. INSTALL PROPOSED LED TRAFFIC SIGNAL HEAD(S).
D. INSTALL PROPOSED LED COUNT-DOWN PEDESTRIAN SIGNAL HEAD(S).
E. INSTALL PROPOSED TRAFFIC SIGN(S).

CABLE NOTES:

1. DDOT PERSONNEL WILL MAKE ALL ELECTRICAL CONNECTIONS INSIDE THE CONTROLLER CABINET. THE CONTRACTOR SHALL MAKE ALL ELECTRICAL CONNECTIONS IN TRAFFIC AND PEDESTRIAN SIGNAL HEADS.
2. TEMPORARY SIGNAL CABLES EXTENDING OVER THE GROUND SURFACE SHALL BE PROTECTED BY FLEXIBLE PLASTIC CONDUIT.
3. THE CONTRACTOR SHALL PROVIDE 50 FEET OF SLACK CABLE COILED NEATLY AT EACH TEMPORARY, PORTABLE, CONCRETE BASE.
4. THE TEMPORARY SPLICE OF THE EXISTING COMMUNICATION CABLE MUST BE PERFORMED BY A DDOT TECHNICIAN. THE SPLICE POINT MUST BE LOCATED IN THE EXISTING DDOT MANHOLE EM01.

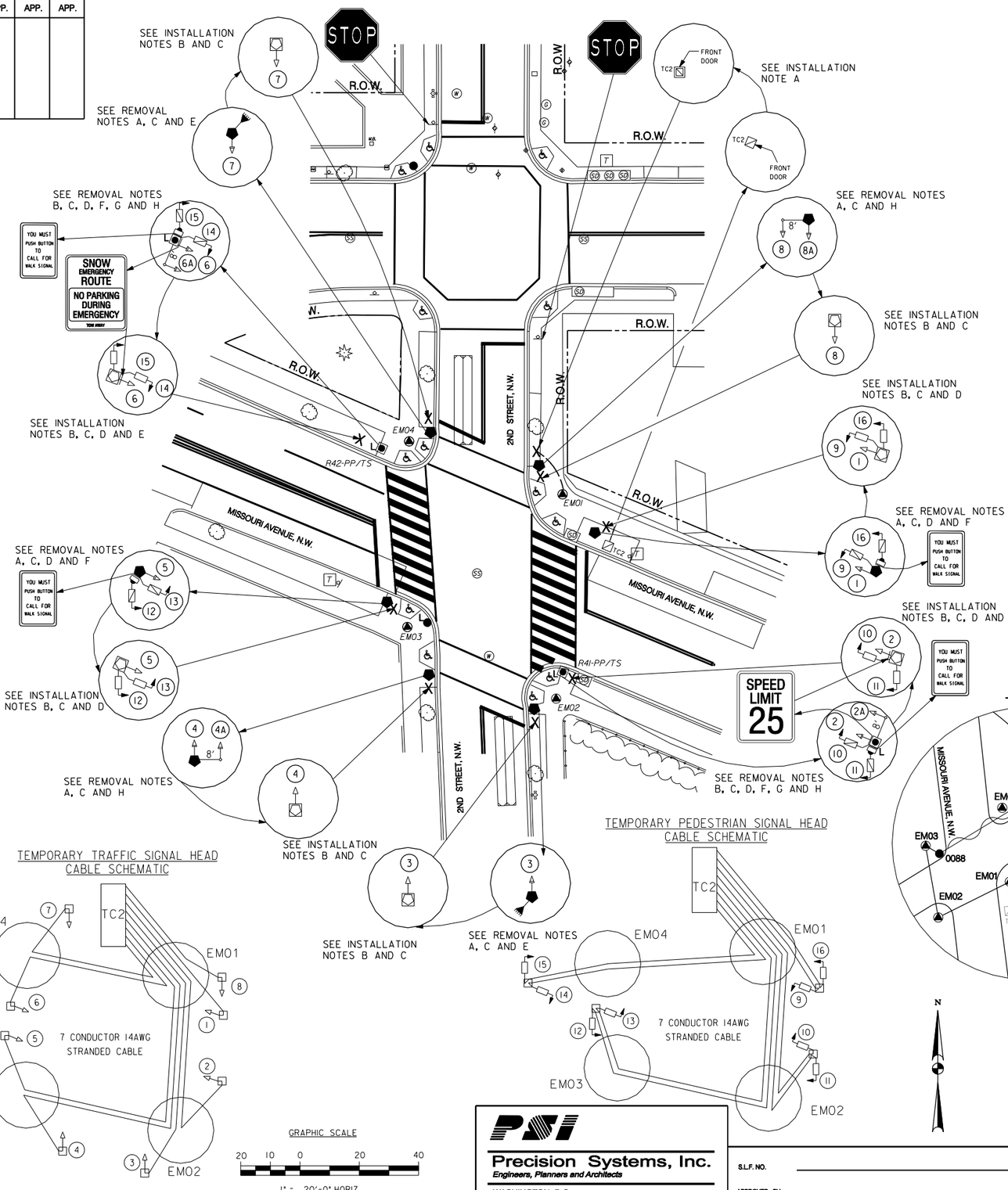

LEGEND:

- EXISTING TRAFFIC SIGNAL CONTROLLER
- EXISTING TRAFFIC SIGNAL CONTROLLER MOUNTED ON A TEMPORARY, PORTABLE, CONCRETE BASE
- PROPOSED LOCATION OF A TEMPORARY, PORTABLE, CONCRETE BASE
- EXISTING 28-FOOT PENDANT POST STREETLIGHT POLE WITH LUMINAIRE AND A TRANSFORMER BASE
- EXISTING WOOD POLE WITH LUMINAIRE
- EXISTING 20-FOOT TRAFFIC SIGNAL POLE WITH A TRANSFORMER BASE
- EXISTING AD-11 TRAFFIC SIGNAL POLE
- PROPOSED 20-FOOT TRAFFIC SIGNAL POLE WITH A TRANSFORMER BASE MOUNTED ON A TEMPORARY, PORTABLE, CONCRETE BASE
- EXISTING 3-SECTION LED TRAFFIC SIGNAL HEAD CONVENTIONAL (ALL LENSES 12 INCHES)
- PROPOSED 3-SECTION LED TRAFFIC SIGNAL HEAD CONVENTIONAL (ALL LENSES 12 INCHES)
- EXISTING 2-SECTION PEDESTRIAN SIGNAL HEAD
- PROPOSED 2-SECTION LED COUNT-DOWN PEDESTRIAN SIGNAL HEAD
- EXISTING 8-FOOT MAST ARM WITH CAP AND CLAMP
- EXISTING MICROWAVE VEHICLE DETECTOR
- EXISTING PEDESTRIAN PUSH BUTTON
- EXISTING WHEELCHAIR RAMP
- EXISTING TREE
- EXISTING CATCH BASIN
- EXISTING TRASH BIN
- EXISTING TRAFFIC SIGN
- EXISTING SANITARY SEWER MANHOLE
- EXISTING WATER MANHOLE
- EXISTING PEPCO ELECTRICAL MANHOLE
- EXISTING DDNOT MANHOLE
- EXISTING FIRE HYDRANT
- EXISTING GAS VALVE
- EXISTING GAS METER
- EXISTING WATER METER
- PROPOSED TEMPORARY 2-2" & 2-4" UNDERGROUND ELECTRICAL CONDUIT
- EXISTING OVERHEAD COMMUNICATION CABE
- EXISTING UNDERGROUND COMMUNICATION CABLE
- EXISTING LOOP DETECTOR
- R.O.W. RIGHT OF WAY LINE

TEMPORARY TRAFFIC SIGNAL HEAD CABLE SCHEMATIC

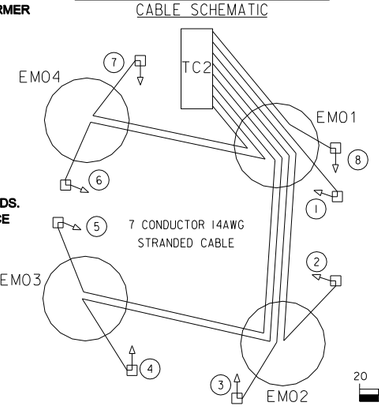

TEMPORARY PEDESTRIAN SIGNAL HEAD CABLE SCHEMATIC

GRAPHIC SCALE

20 10 0 20 40

1" = 20'-0" HORIZ.

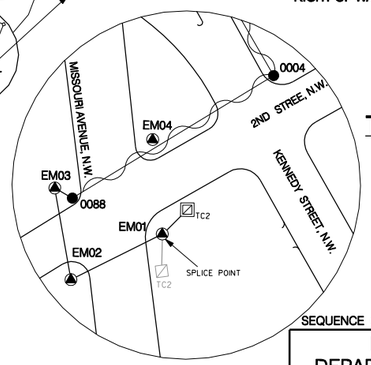

TEMPORARY COMMUNICATION CABLE PLAN FOR TC2

SEQUENCE OF OPERATION DRAWING NO. TS-1661-B

SG-05

PSI
Precision Systems, Inc.
Engineers, Planners and Architects
WASHINGTON, D.C.

S.L.F. NO.

APPROVED BY DATE

DISTRICT OF COLUMBIA
DEPARTMENT OF TRANSPORTATION
INFRASTRUCTURE PROJECT MANAGEMENT ADMINISTRATION

2ND STREET AND MISSOURI AVENUE, N.W.
TRAFFIC SIGNAL MODIFICATION

SUBMITTED BY	PROJECT ENGINEER	DATE
RECOMMENDED	GROUP MANAGER	DATE
APPROVED	ITS, SYSTEMS SUPPORT BRANCH MANAGER William W. McGuirk	DATE 4/8/2015
	SAFETY, STANDARDS AND DATA ANALYSIS, MANAGER	DATE
	DEPUTY PROGRAM MANAGER William W. McGuirk	DATE 4/8/2015
	PROGRAM MANAGER	DATE

STAGE	1
FIELD CHECKED BY	AYY/WZ
DESIGNED BY	AYY
DRAWN BY	WZ/YZ
REVIEWED BY	AYY
DATE	02 /15
SCALE	1" = 20'
SHEET / OF	1 / 1
DRAWING NO.	S-2196-A

p:\60570\for printing\signal\plans\2-2nd Street and Missouri Avenue NW\pSG-0101-60570-2.dgn
Tuesday, July 28, 2015 AT 04:59 PM

REVISION								
DESCRIPTION	DATE	COR.	CHK.	APP.	APP.	APP.	APP.	APP.

REG	STATE	PROJECT	SHEET NO.	TOTAL SHEETS
3	D.C.	FAP No. STP-8888(480)	166	173

GENERAL NOTES:

A. ALL WORK RELATING TO THE INSTALLATION OF TRAFFIC SIGNALS SHALL COMPLY WITH APPROPRIATE PROVISIONS OF THE 2009 DDOT STANDARD DRAWINGS, 2013 STANDARD SPECIFICATIONS, AND CONTRACT SPECIAL PROVISIONS.
B. THE CONTRACTOR SHALL SUBMIT TO THE DDOT CATALOG CUTS OF ALL EQUIPMENT AND MATERIALS TO BE FURNISHED AND INSTALLED. WRITTEN APPROVAL FROM DDOT SHALL BE SECURED PRIOR TO PROCUREMENT.
C. THE LOCATION OF PROPOSED EQUIPMENT SHOWN IS APPROXIMATE. THE LOCATION OF ALL PROPOSED EQUIPMENT AND MATERIALS SHALL BE FIELD LOCATED, VERIFIED, AND APPROVED BY THE ENGINEER PRIOR TO INSTALLATION.
D. THE CONTRACTOR SHALL FURNISH AND INSTALL ALL PROPOSED CONDUITS, MANHOLES, POLE FOUNDATIONS, AND CONTROLLER CABINET FOUNDATION.
E. THE CONTRACTOR SHALL FURNISH AND INSTALL ALL TRAFFIC AND PEDESTRIAN SIGNAL HEADS, TRAFFIC SIGNAL POLES, TRANSFORMER BASES, APS UNITS, MAGNETIC SENSOR DETECTORS, SENSOR ACCESS POINT, TRAFFIC SIGNAL CONTROLLER, CABINET, AND ALL MOUNTING HARDWARE.
F. THE CONTRACTOR SHALL RETURN ALL REMOVED TRAFFIC SIGNAL EQUIPMENT TO DDOT TRAFFIC SIGNAL SHOP. CONTACT MR. RANDOLPH COPPER 72 HOURS IN ADVANCE AT (202) 905-6059 TO ARRANGE SERVICE.
G. NO ABOVE GROUND HARDWARE OR EQUIPMENT SHALL BE LOCATED SUCH THAT A 4 FEET CLEAR PATH IS NOT AVAILABLE FOR ADA PURPOSES.
H. THE CONTRACTOR MUST COORDINATE ANY INSTALLATION OF CCTV EQUIPMENT AND CABLE WITH DDOT.

INSTALLATION NOTES:

A. INSTALL TRAFFIC SIGNAL CONTROLLER CABINET FOUNDATION.
B. INSTALL TRAFFIC SIGNAL CONTROLLER CABINET.
C. INSTALL TRAFFIC SIGNAL CONTROLLER.
D. INSTALL 20-FOOT TRAFFIC SIGNAL POLE WITH A TRANSFORMER BASE.
E. INSTALL 28-FOOT PENDANT POST STREETLIGHT POLE WITH A TRANSFORMER BASE AND LUMINAIRE.
F. INSTALL 8-FOOT MAST ARM WITH CAP AND CLAMP.
G. INSTALL LED TRAFFIC SIGNAL HEAD(S).
H. INSTALL LED COUNT-DOWN PEDESTRIAN SIGNAL HEAD(S).
I. INSTALL APS UNIT(S).
J. INSTALL TRAFFIC SIGN(S).
K. INSTALL CCTV CAMERA.
L. INSTALL VIDEO DETECTION CAMERA.

MAST ARM NOTES:

A. A BACK PLATE SHALL BE AFFIXED TO EACH MAST ARM MOUNTED SIGNAL HEAD.
B. THE BOTTOM OF MAST ARM MOUNTED SIGNAL HEADS SHALL BE 16 FEET ABOVE THE ROADWAY SURFACE.
C. AN ASTRO-BRAC OR APPROVED EQUIVALENT SHALL BE USED TO MOUNT SIGNAL HEADS (2A, 4A, 6A AND 8A) TO MAST ARMS.

CABLE NOTES:

A. DDOT PERSONNEL WILL MAKE ALL ELECTRICAL CONNECTIONS INSIDE THE CONTROLLER CABINET. THE CONTRACTOR SHALL MAKE ALL ELECTRICAL CONNECTIONS IN TRAFFIC AND PEDESTRIAN SIGNAL HEADS.
B. THE CONTRACTOR SHALL FURNISH AND INSTALL NEW, UNSPLICED 7C 14AWG STRANDED CABLE TO ALL SIGNAL HEADS.
C. THE CONTRACTOR SHALL FURNISH AND INSTALL NEW, UNSPLICED SHIELDED 4C 18AWG STRANDED CABLES TO ALL APS UNITS. A SEGMENT OF 4C 18AWG SHIELDED, STRANDED CABLE SHALL EXTEND FROM EACH POLE MOUNTED APS UNIT TO THE 2-SECTION PEDESTRIAN SIGNAL HEAD MOUNTED ON THE SAME POLE.
D. THE CONTRACTOR SHALL FURNISH AND INSTALL NEW 25 PAIR 19AWG COMMUNICATION CABLES.

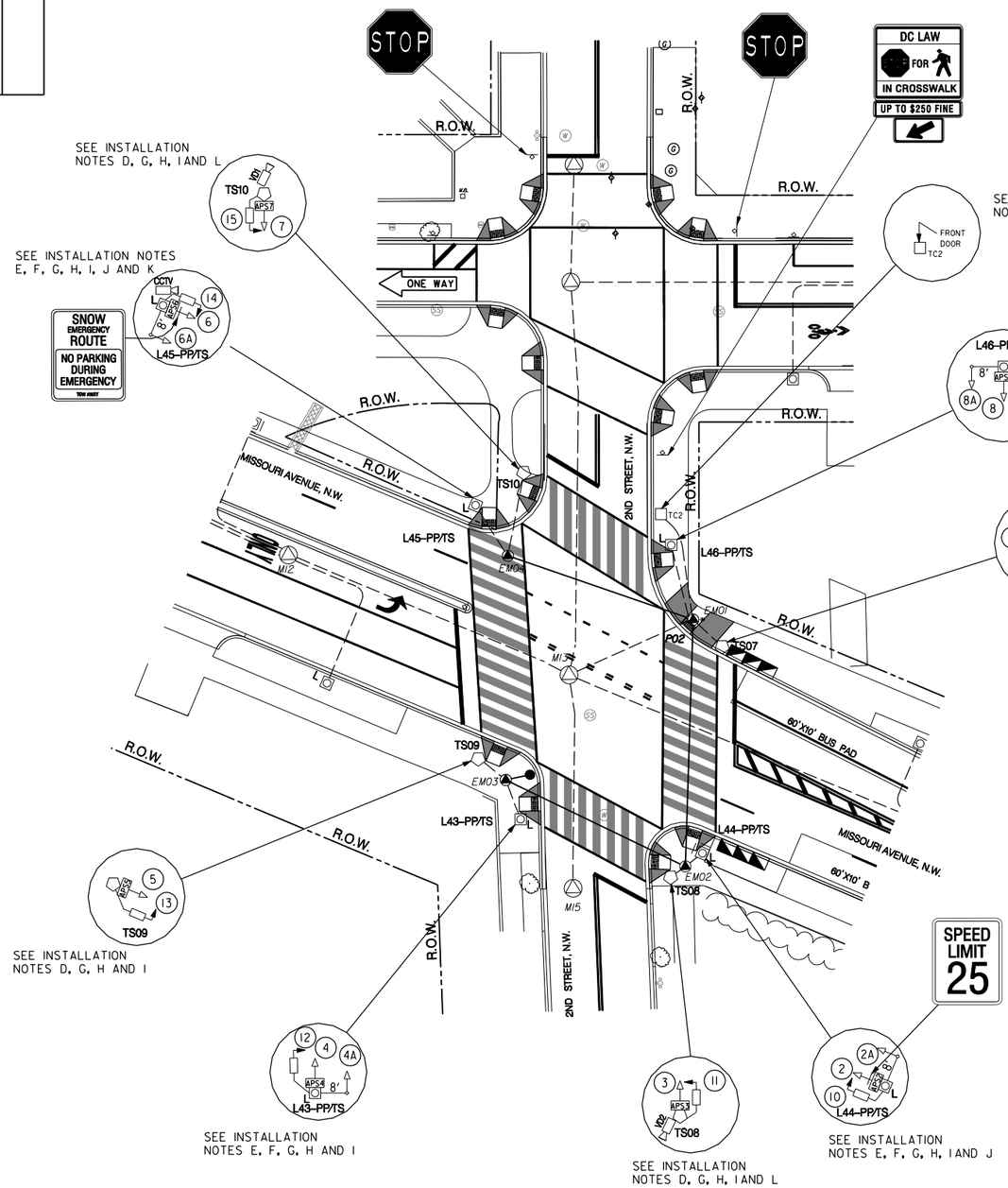

LEGEND:

- PROPOSED TYPE 170E TRAFFIC SIGNAL CONTROLLER WITH A MODEL 336SS CABINET AND AN EXTERNAL UNINTERRUPTED POWE SUPPLY SYSTEM
- EXISTING WOOD POLE
- PROPOSED 28-FOOT PENDANT POST STREETLIGHT POLE WITH A TRANSFORMER BASE AND LUMINAIRE
- PROPOSED 20-FOOT STEEL TRAFFIC SIGNAL POLE WITH A TRANSFORMER BASE
- PROPOSED 3-SECTION LED TRAFFIC SIGNAL HEAD CONVENTIONAL (ALL LENSES 12 INCHES)
- PROPOSED 5-SECTION LED TRAFFIC SIGNAL HEAD CONVENTIONAL (ALL LENSES 12 INCHES)
- PROPOSED 2-SECTION LED COUNT-DOWN PEDESTRIAN SIGNAL HEAD
- PROPOSED CCTV CAMERA
- PROPOSED VIDEO DETECTION CAMERA
- PROPOSED ACCESSIBLE PEDESTRIAN SIGNAL (APS)
- PROPOSED 8-FOOT MAST ARM WITH CAP AND CLAMP
- PROPOSED ADA COMPLIANT WHEELCHAIR RAMP
- PROPOSED CATCH BASINS
- EXISTING TRAFFIC SIGN
- EXISTING UNKNOWN MANHOLE
- EXISTING SANITARY SEWER MANHOLE
- EXISTING WATER MANHOLE
- PROPOSED STORM DRAINAGE MANHOLE
- EXISTING FIRE HYDRANT
- EXISTING PEPCO ELECTRICAL MANHOLE
- EXISTING GAS VALVE
- EXISTING GAS METER
- EXISTING WATER METER
- EXISTING TREE
- EXISTING DDOT MANHOLE
- PROPOSED DDOT MANHOLE (4'X4'X4')
- PROPOSED DDOT MANHOLE (3'X3'X3')
- PROPOSED LOCATION FOR PEPCO POWER CONNECTIONE
- TRENCH DRAIN
- EXISTING DDOT ELECTRICAL CONDUIT
- PROPOSED DDOT ELECTRICAL PVC CONDUIT
- R.O.W. RIGHT OF WAY LINE

SEQUENCE OF OPERATION DRAWING NO. TS-1661-C

SG-06

Precision Systems, Inc.
Engineers, Planners and Architects
WASHINGTON, D.C.

S.L.F. NO.

APPROVED BY DATE

DISTRICT OF COLUMBIA
DEPARTMENT OF TRANSPORTATION
INFRASTRUCTURE PROJECT MANAGEMENT ADMINISTRATION

2ND STREET AND MISSOURI AVENUE, N.W.
TRAFFIC SIGNAL MODIFICATION

SUBMITTED BY PROJECT ENGINEER DATE
RECOMMENDED GROUP MANAGER DATE
APPROVED ITS, SYSTEMS SUPPORT BRANCH MANAGER DATE
William W. Mc Quish 4/8/2015
SAFETY, STANDARDS AND DATA ANALYSIS, MANAGER DATE
DEPUTY PROGRAM MANAGER DATE
William W. Mc Quish 4/8/2015
PROGRAM MANAGER DATE

	FINAL
FIELD CHECKED BY	AYY/WZ
DESIGNED BY	AYY
DRAWN BY	WZ/YZ
REVIEWED BY	AYY
DATE	02 /15
SCALE	1" = 20'
SHEET / OF	1 / 3
DRAWING NO.	S-2196-B

p:\60570\for printing\signal\plans\2-2nd Street and Missouri Avenue NW\pSG-P101-60570-2.dgn
Tuesday, July 28, 2015 AT 04:59 PM

REVISION								
DESCRIPTION	DATE	COR.	CHK.	APP.	APP.	APP.	APP.	APP.

REG	STATE	PROJECT	SHEET NO.	TOTAL SHEETS
3	D.C.	FAP No. STP-8888(480)	167	173

PROPOSED TRAFFIC SIGNAL HEAD CABLE SCHEMATIC

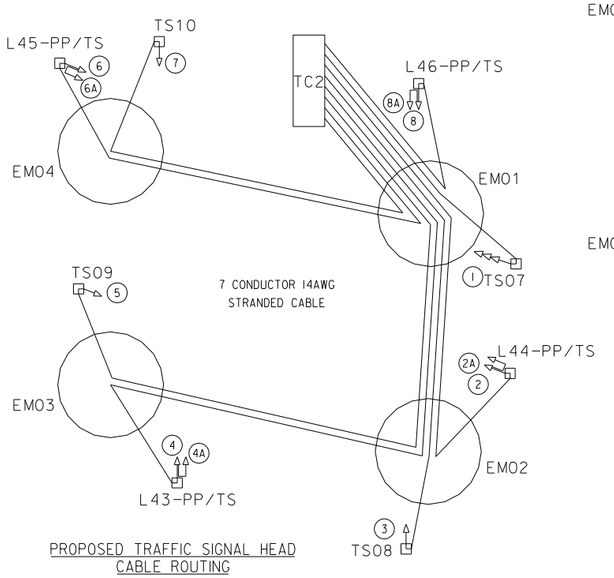

PROPOSED TRAFFIC SIGNAL HEAD CABLE ROUTING

TC2 - EM01 - TS07 - 1
TC2 - EM01 - EM02 - L44-PP/TS - 2
2 - 2A
TC2 - EM01 - EM02 - TS08 - 3
TC2 - EM01 - EM02 - EM03 - L43-PP/TS - 4
4 - 4A
TC2 - EM01 - EM02 - EM03 - TS09 - 5
TC2 - EM01 - EM04 - L45-PP/TS - 6
6 - 6A
TC2 - EM01 - EM04 - TS10 - 7
TC2 - EM01 - L46-PP/TS - 8
8 - 8A

PROPOSED PEDESTRIAN SIGNAL HEAD CABLE SCHEMATIC

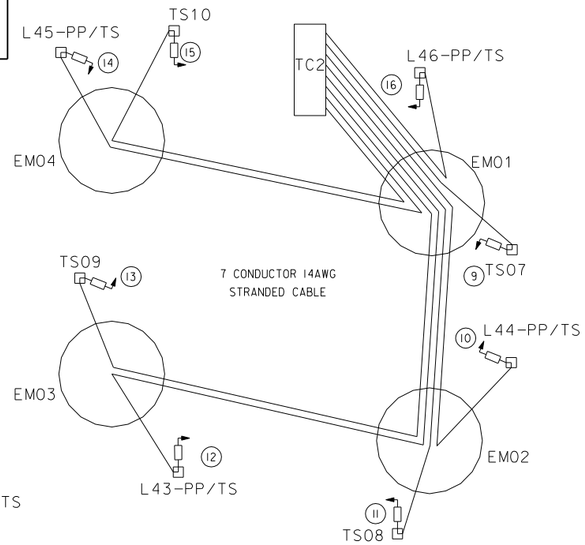

PROPOSED PEDESTRIAN SIGNAL HEAD CABLE ROUTING

TC2 - EM01 - TS07 - 9
TC2 - EM01 - EM02 - L44-PP/TS - 10
TC2 - EM01 - EM02 - TS08 - 11
TC2 - EM01 - EM02 - EM03 - L43-PP/TS - 12
TC2 - EM01 - EM02 - EM03 - TS09 - 13
TC2 - EM01 - EM04 - L45-PP/TS - 14
TC2 - EM01 - EM04 - TS10 - 15
TC2 - EM01 - L46-PP/TS - 16

PROPOSED ACCESSIBLE PEDESTRIAN SIGNAL (APS) CABLE SCHEMATIC

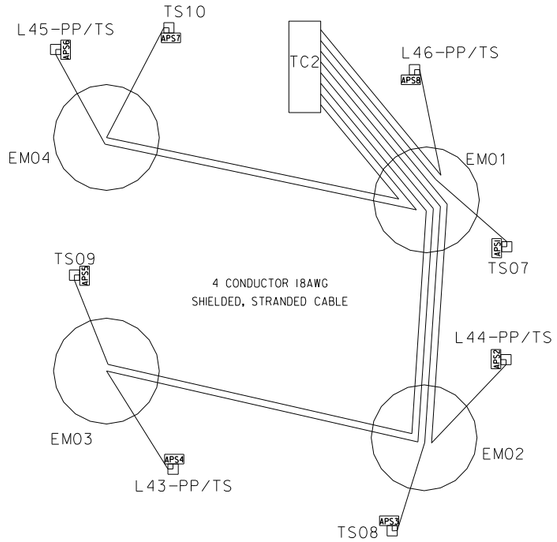

PROPOSED ACCESSIBLE PEDESTRIAN SIGNAL (APS) CABLE ROUTING

TC2 - EM01 - TS07 - APS1
TC2 - EM01 - EM02 - L44-PP/TS - APS2
TC2 - EM01 - EM02 - TS08 - APS3
TC2 - EM01 - EM02 - EM03 - L43-PP/TS - APS4
TC2 - EM01 - EM02 - EM03 - TS09 - APS5
TC2 - EM01 - EM04 - L45-PP/TS - APS6
TC2 - EM01 - EM04 - TS10 - APS7
TC2 - EM01 - L46-PP/TS - APS8

PROPOSED STREETLIGHT CABLE SCHEMATIC

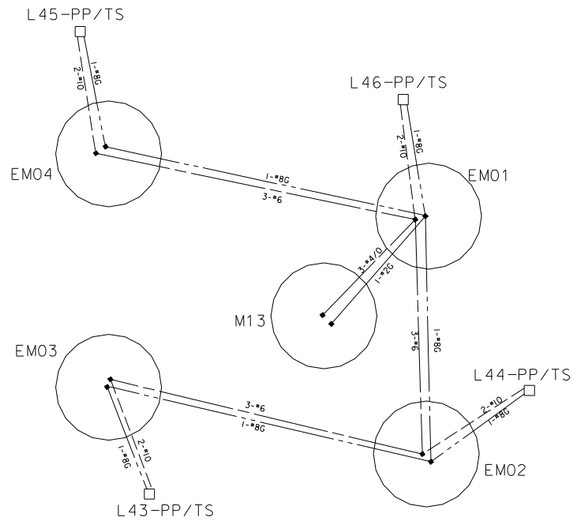

PROPOSED STREETLIGHT CABLE ROUTING

MI3 - EM01 - EM02 - EM03 - L43-PP/TS
MI3 - EM01 - EM02 - L44-PP/TS
MI3 - EM01 - EM04 - L45-PP/TS
MI3 - EM01 - L46-PP/TS

PROPOSED STREETLIGHT CABLE LEGEND

- NO. 8 STRANDED BARE COPPER GROUND WIRE
- NO. 2 STRANDED BARE COPPER GROUND WIRE
- TWO NO. 10 STRANDED CABLES
- THREE NO. 6 STRANDED CABLES
- THREE NO. 4/0 STRANDED CABLES
- ◆ SPLICE POINT

PROPOSED CCTV CAMERA CABLE SCHEMATIC

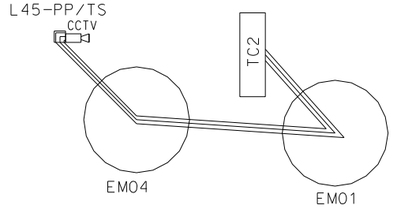

PROPOSED CCTV CAMERA CABLE ROUTING

TC2 - EM01 - EM04 - L45-PP/TS - CCTV

7 CONDUCTOR 14 AWG STRANDED CABLE
3 PAIR DIRECT BURIAL 19 AWG TWISTED PAIR
RG-6 FLOODED DIRECT BURIAL VIDEO COAX
FROM POWER SUPPLY - TC - CCTV CAMERA
COMPOSITE CABLE

NOTES:
1. MOUNT POWER SUPPLY ON POLE AT APPROPRIATE LOCATION 12' TO 14' FROM GROUND.
2. MOUNT CAMERA DOME ON MAST ARM AS IS SPECIFIED ON CCTV MOUNTING DETAILS (DDOT STANDARD DRAWING).

PROPOSED VIDEO DETECTION CAMERA CABLE SCHEMATIC

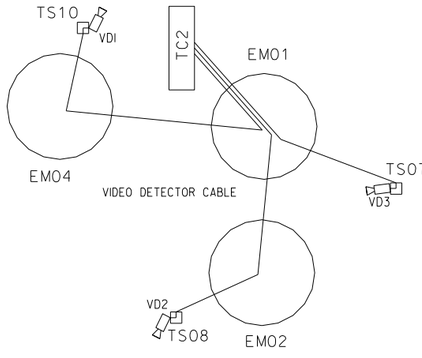

PROPOSED VIDEO DETECTION CAMERA CABLE ROUTING

TC2 - EM01 - EM04 - TS10 - VDI
TC2 - EM01 - EM02 - TS08 - VD2
TC2 - EM01 - TS07 - VD3

STATION SCHEDULE		
STATION	STATUS	DESCRIPTION
TC2	PROPOSED	TYPE 170E TRAFFIC SIGNAL CONTROLLER WITH A MODEL 336SS CABINET
EM01(P02)	EXISTING	DDOT TRAFFIC SIGNAL MANHOLE (4'x4'x4')
EM02	EXISTING	DDOT TRAFFIC SIGNAL MANHOLE (4'x4'x4')
EM03	EXISTING	DDOT TRAFFIC SIGNAL MANHOLE (4'x4'x4')
EM04	EXISTING	DDOT TRAFFIC SIGNAL MANHOLE (4'x4'x4')
MI3	PROPOSED	DDOT TRAFFIC SIGNAL MANHOLE (4'x4'x4')
TS07	PROPOSED	20-FOOT TRAFFIC SIGNAL POLE WITH A TRANSFORMER BASE
TS08	PROPOSED	20-FOOT TRAFFIC SIGNAL POLE WITH A TRANSFORMER BASE
TS09	PROPOSED	20-FOOT TRAFFIC SIGNAL POLE WITH A TRANSFORMER BASE
TS10	PROPOSED	20-FOOT TRAFFIC SIGNAL POLE WITH A TRANSFORMER BASE
L43-PP/TS	PROPOSED	28-FOOT STEEL PENDANT POST STREETLIGHT POLE WITH LUMINAIRE, AN 8-FOOT MAST ARM AND A TRANSFORMER BASE
L44-PP/TS	PROPOSED	28-FOOT STEEL PENDANT POST STREETLIGHT POLE WITH LUMINAIRE, AN 8-FOOT MAST ARM AND A TRANSFORMER BASE
L45-PP/TS	PROPOSED	28-FOOT STEEL PENDANT POST STREETLIGHT POLE WITH LUMINAIRE, AN 8-FOOT MAST ARM AND A TRANSFORMER BASE
L46-PP/TS	PROPOSED	28-FOOT STEEL PENDANT POST STREETLIGHT POLE WITH LUMINAIRE, AN 8-FOOT MAST ARM AND A TRANSFORMER BASE

STREETLIGHT CABLE SUMMARY							
SCHEDULE			QUANTITY				
			CABLE			GROUNDING	
FROM STA.	TO STA.	DISTANCE	#4/0	#6	#10	#2	#8
EM01	MI3	37	141			47	
EM01	EM02	69		237			79
EM02	EM03	56		198			66
EM01	EM04	55		195			65
EM03	L43-PP/TS	12			44		22
EM02	L44-PP/TS	6			32		16
EM04	L45-PP/TS	17			54		27
EM01	L46-PP/TS	22			64		32
TOTAL		N/A	141	630	194	47	307

STREETLIGHT POLE INFORMATION (POLE INSTALLATION)						
DRAWING LIGHT NO.	MARYLAND GRID PLAT	LOCATION	TYPE OF POLE	LIGHT SOURCE	LAMP WATTS	DATE IN SERVICE
L43-PP/TS		SW COR. OF 2ND ST. AND MISSOURI AVE.	PEND POST	LED	150W	
L44-PP/TS		SE COR. OF 2ND ST. AND MISSOURI AVE.	PEND POST	LED	150W	
L45-PP/TS		NW COR. OF 2ND ST. AND MISSOURI AVE.	PEND POST	LED	150W	
L46-PP/TS		NE COR. OF 2ND ST. AND MISSOURI AVE.	PEND POST	LED	150W	

STREETLIGHT POLE INFORMATION (POLE REMOVAL)						
DRAWING LIGHT NO.	MARYLAND GRID PLAT	LOCATION	TYPE OF POLE	LIGHT SOURCE	LAMP WATTS	DATE IN SERVICE
R41-PP/TS		SE COR. OF 2ND ST. AND MISSOURI AVE.	PEND POST	HPS	400W	
R42-PP/TS		NW COR. OF 2ND ST. AND MISSOURI AVE.	PEND POST	HPS	400W	

CONDUIT SUMMARY				
LOCATION TO LOCATION	STATUS	SIZE (DIA.) (IN)	NUMBER OF CONDUITS	QUANTITY (FT)
EM01 - TC2	PROPOSED	2.4	2.2	33
EM01 - MI3	PROPOSED	4	4	37
EM01 - EM02	EXISTING	4	4	69
EM02 - EM03	EXISTING	4	4	56
EM01 - EM04	EXISTING	4	4	55
EM01 - TS07	PROPOSED	2.4	1.1	12
EM02 - TS08	PROPOSED	2.4	1.1	6
EM03 - TS09	PROPOSED	2.4	1.1	10
EM04 - TS10	PROPOSED	2.4	1.1	24
EM03 - L43-PP/TS	PROPOSED	2.4	1.1	12
EM02 - L44-PP/TS	PROPOSED	2.4	1.1	6
EM04 - L45-PP/TS	PROPOSED	2.4	1.1	17
EM01 - L46-PP/TS	PROPOSED	2.4	1.1	22

SEQUENCE OF OPERATION DRAWING NO. TS-1661-C

SG-07

Precision Systems, Inc.
Engineers, Planners and Architects
WASHINGTON, D.C.

S.L.F. NO.

APPROVED BY _____ DATE

DISTRICT OF COLUMBIA
DEPARTMENT OF TRANSPORTATION
INFRASTRUCTURE PROJECT MANAGEMENT ADMINISTRATION

2ND STREET AND MISSOURI AVENUE, N.W.
TRAFFIC SIGNAL MODIFICATION

SUBMITTED BY _____ PROJECT ENGINEER _____ DATE
RECOMMENDED _____ GROUP MANAGER _____ DATE
APPROVED _____ ITS, SYSTEMS SUPPORT BRANCH MANAGER William W. Mc Gish 4/8/2015 DATE
SAFETY, STANDARDS AND DATA ANALYSIS, MANAGER _____ DATE
DEPUTY PROGRAM MANAGER _____ DATE
PROGRAM MANAGER William W. Mc Gish 4/8/2015 DATE

FINAL	
FIELD CHECKED BY	AYY/WZ
DESIGNED BY	AYY
DRAWN BY	WZ/YZ
REVIEWED BY	AYY
DATE	02 /15
SCALE	N.T.S.
SHEET	2 OF 3
DRAWING NO.	S-2196-B

p:\60570\for printing\signal\plans\2-2nd Street and Missouri Avenue NW\pSG-PI02-60570-2.dgn
Tuesday, July 28, 2015 AT 05:00 PM

REVISION								
DESCRIPTION	DATE	COR.	CHK.	APP.	APP.	APP.	APP.	APP.

REG	STATE	PROJECT	SHEET NO.	TOTAL SHEETS
3	D.C.	FAP No. STP-8888(480)	168	173

GENERAL NOTES:

1. THE LOCATION OF UTILITIES SHOWN ON THE PLANS ARE BASED ON FIELD SURVEY DATA AND/OR RECORD DRAWINGS. THE LOCATION OF UTILITIES SHOWN IS APPROXIMATE AND THE INFORMATION SHOWN IS NOT NECESSARILY COMPLETE. IT SHALL BE THE RESPONSIBILITY OF THE CONTRACTOR TO VERIFY THE EXISTENCE OF ALL UTILITIES WELL IN ADVANCE OF CONDUCTING CONSTRUCTION OPERATIONS WHICH COULD DAMAGE THESE FACILITIES. IN AREAS WHERE PROPOSED CONSTRUCTION MAY CONFLICT WITH EXISTING UTILITIES, THE CONTRACTOR SHALL TAKE ALL NECESSARY PRECAUTIONS TO AVOID DAMAGE TO EXISTING UTILITIES. IF A UTILITY IS DAMAGED, THE CONTRACTOR SHALL IMMEDIATELY NOTIFY THE ENGINEER AND THE OWNER OF SAID UTILITY. ANY DAMAGE SUSTAINED TO UTILITIES ABOVE OR BELOW THE GROUND SHALL BE REPAIRED BY OR UNDER THE DIRECTION OF THE OWNER AT CONTRACTOR'S EXPENSE. UNDER NO CIRCUMSTANCE SHALL THE CONTRACTOR BACKFILL AN EXCAVATION AFFECTING SAID UTILITY WITHOUT FIRST RECEIVING PERMISSION FROM THE UTILITY OWNER.
2. THE CONTRACTOR SHALL EXCAVATE AND LOCATE VERTICALLY AND HORIZONTALLY ALL UTILITIES IN CLOSE PROXIMITY TO THE PROPOSED TRAFFIC SIGNAL WORK AREA AS NECESSARY FOR CONSTRUCTION.
3. THE CONTRACTOR SHALL NOTIFY MISS UTILITY AT 1-800-257-7777, 48 HOURS PRIOR TO EXCAVATING.
4. THE CONTRACTOR SHALL MAINTAIN A MINIMUM 2 FOOT HORIZONTAL CLEARANCE TO ALL UTILITIES DURING CONSTRUCTION.
5. CONTRACTOR SHALL FURNISH AND INSTALL ALL PROPOSED CONDUITS.

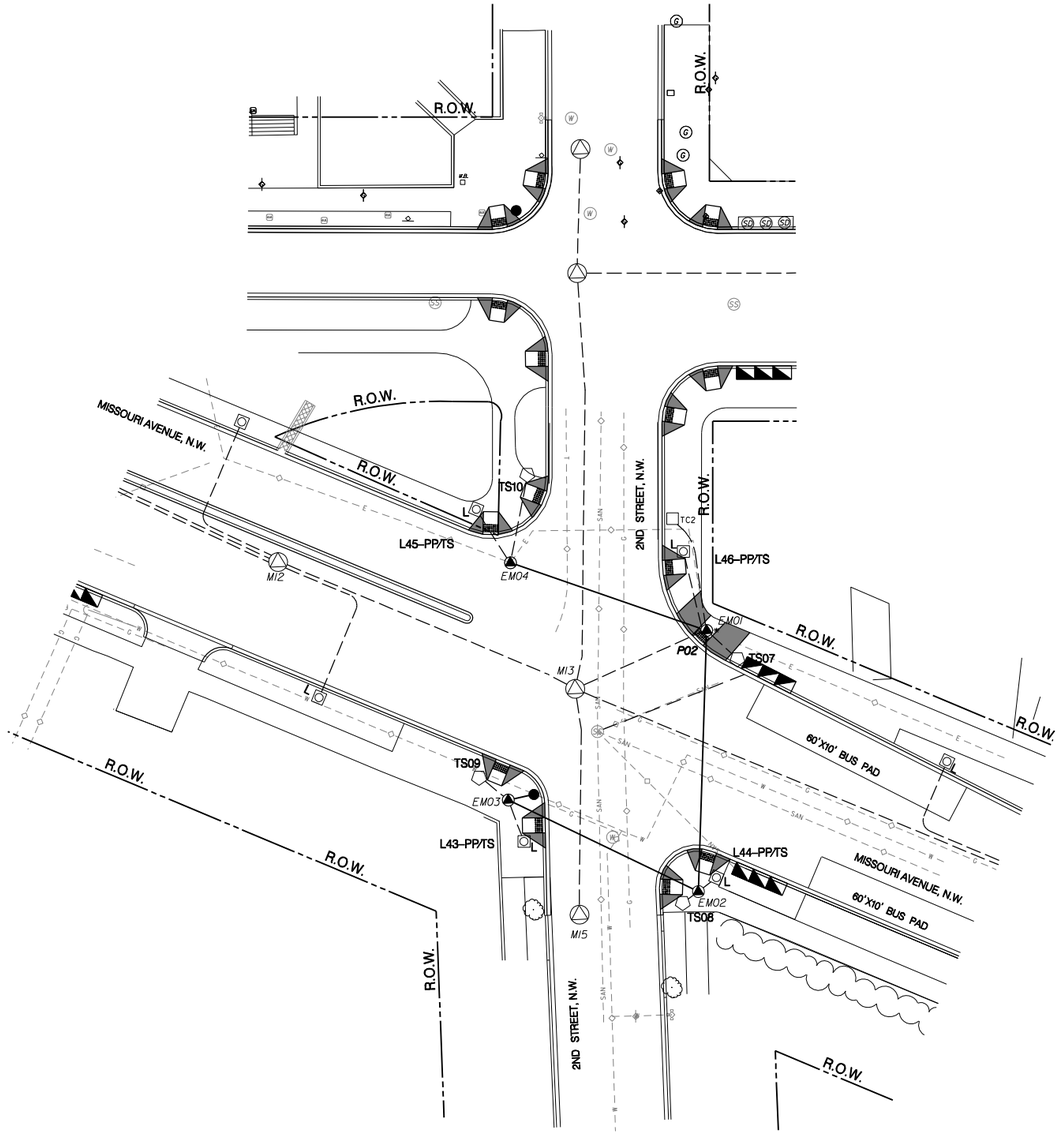

LEGEND:

- PROPOSED TYPE 170E TRAFFIC SIGNAL CONTROLLER WITH A MODEL 336SS CABINET AND AN EXTERNAL UNINTERRUPTED POWER SUPPLY SYSTEM
- EXISTING WOOD POLE
- PROPOSED 28-FOOT PENDANT POST STREETLIGHT POLE WITH A TRANSFORMER BASE AND LUMINAIRE
- PROPOSED 20-FOOT STEEL TRAFFIC SIGNAL POLE WITH A TRANSFORMER BASE
- PROPOSED ADA COMPLIANT WHEELCHAIR RAMP
- PROPOSED CATCH BASINS
- EXISTING TRAFFIC SIGN
- EXISTING UNKNOWN MANHOLE
- EXISTING SANITARY SEWER MANHOLE
- EXISTING WATER MANHOLE
- PROPOSED STORM DRAINNAGE MANHOLE
- EXISTING FIRE HYDRANT
- EXISTING PEPCO ELECTRICAL MANHOLE
- EXISTING GAS VALVE
- EXISTING GAS METER
- EXISTING WATER METER
- EXISTING TREE
- EXISTING DDOT MANHOLE
- PROPOSED DDOT MANHOLE (4'X4'X4')
- PROPOSED DDOT MANHOLE (3'X3'X3')
- PROPOSED LOCATION FOR PEPCO POWER CONNECTION
- TRENCH DRAIN
- EXISTING PEPCO ELECTRICAL LINE (FROM RECORD)
- EXISTING SANITARY LINE (FROM RECORD)
- EXISTING WATER LINE (FROM RECORD)
- EXISTING TELEPHONE LINE (FROM RECORD)
- EXISTING GAS LINE (FROM RECORD)
- PROPOSED STORMDRAIN CONNECTION PIPE
- EXISTING DDOT ELECTRICAL CONDUIT
- PROPOSED DDOT ELECTRICAL PVC CONDUIT
- RIGHT OF WAY LINE

GRAPHIC SCALE

20 10 0 20 40

1" = 20'-0" HORIZ.

N

SEQUENCE OF OPERATION DRAWING NO. TS-1661-C

SG-08

Precision Systems, Inc.
Engineers, Planners and Architects
WASHINGTON, D.C.

S.L.F. NO.

APPROVED BY _____ DATE

DISTRICT OF COLUMBIA
DEPARTMENT OF TRANSPORTATION
INFRASTRUCTURE PROJECT MANAGEMENT ADMINISTRATION

2ND STREET AND MISSOURI AVENUE, N.W.
TRAFFIC SIGNAL MODIFICATION

FINAL

FIELD CHECKED BY AYY/WZ
DESIGNED BY AYY
DRAWN BY WZ/YZ
REVIEWED BY AYY
DATE 02 /15
SCALE 1" = 20'
SHEET 3 OF 3
DRAWING NO. S-2196-B

SUBMITTED BY _____ PROJECT ENGINEER _____ DATE
RECOMMENDED _____ GROUP MANAGER _____ DATE
APPROVED _____ ITS, SYSTEMS SUPPORT BRANCH MANAGER William W. Mc Gush 4/8/2015 DATE
SAFETY, STANDARDS AND DATA ANALYSIS, MANAGER _____ DATE
DEPUTY PROGRAM MANAGER _____ DATE
PROGRAM MANAGER William W. Mc Gush 4/8/2015 DATE

p:\60570\for printing\signal\plans\2-2nd Street and Missouri Avenue NW\pSG-PI03-60570-2.dgn
Tuesday, July 28, 2015 AT 05:00 PM

REVISION								
DESCRIPTION	DATE	COR.	CHK.	APP.	APP.	APP.	APP.	APP.

REG	STATE	PROJECT	SHEET NO.	TOTAL SHEETS
3	D.C.	FAP No. STP-8888(480)	169	173

EXISTING COMMUNICATION CABLE PLAN-1

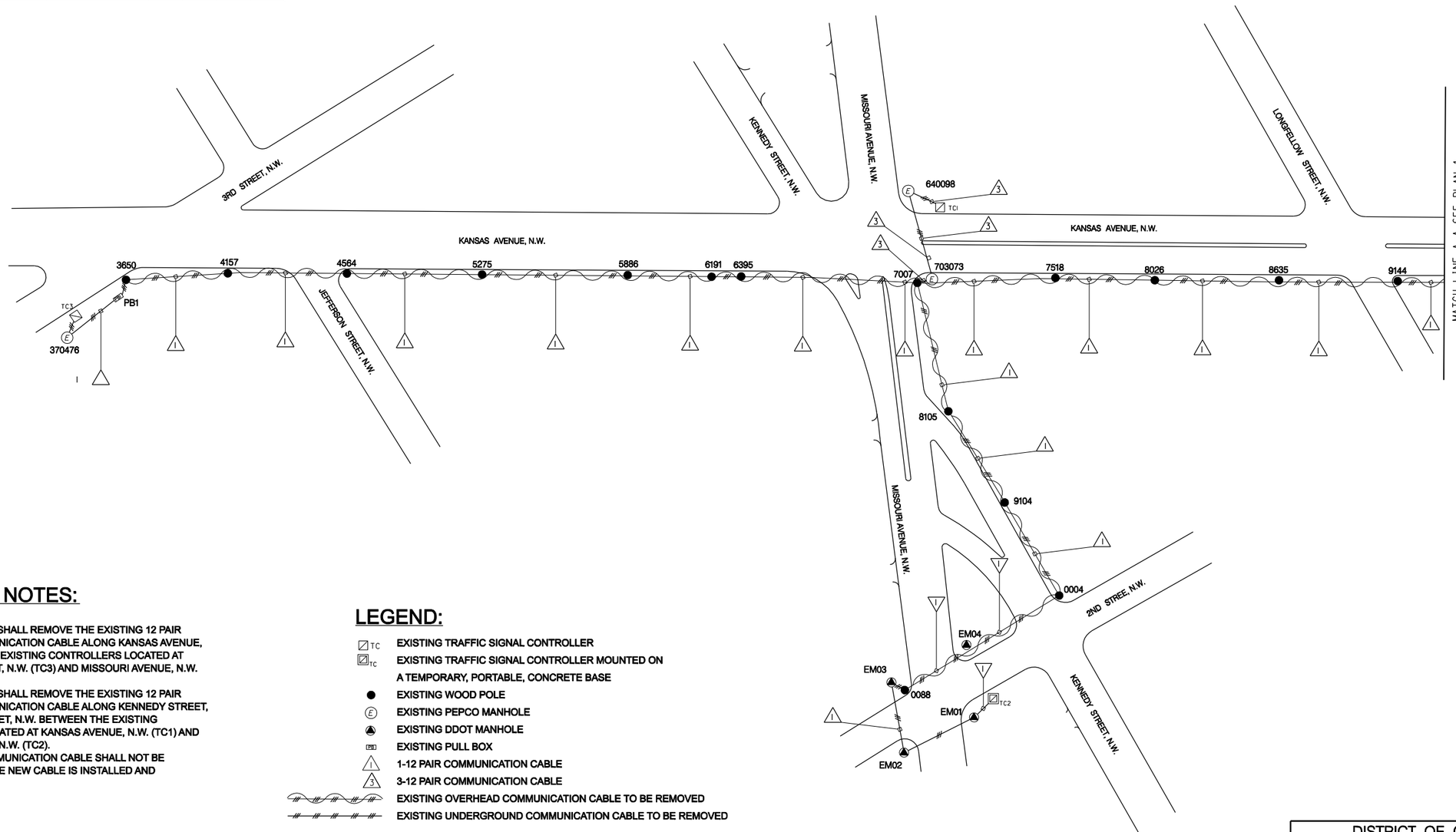

REMOVAL NOTES:

1. THE CONTRACTOR SHALL REMOVE THE EXISTING 12 PAIR OVERHEAD COMMUNICATION CABLE ALONG KANSAS AVENUE, N,W, BETWEEN THE EXISTING CONTROLLERS LOCATED AT JEFFERSON STREET, N.W. (TC3) AND MISSOURI AVENUE, N.W. (TC1).
2. THE CONTRACTOR SHALL REMOVE THE EXISTING 12 PAIR OVERHEAD COMMUNICATION CABLE ALONG KENNEDY STREET, N.W. AND 2ND STREET, N.W. BETWEEN THE EXISTING CONTROLLERS LOCATED AT KANSAS AVENUE, N.W. (TC1) AND MISSOURI AVENUE, N.W. (TC2).
3. THE EXISTING COMMUNICATION CABLE SHALL NOT BE REMOVED UNTIL THE NEW CABLE IS INSTALLED AND OPERATIONAL.

LEGEND:

- TC — EXISTING TRAFFIC SIGNAL CONTROLLER
- TC — EXISTING TRAFFIC SIGNAL CONTROLLER MOUNTED ON A TEMPORARY, PORTABLE, CONCRETE BASE
- EXISTING WOOD POLE
- (E) EXISTING PEPCO MANHOLE
- EXISTING DDOT MANHOLE
- PB EXISTING PULL BOX
- 1 — 1-12 PAIR COMMUNICATION CABLE
- 3 — 3-12 PAIR COMMUNICATION CABLE
- EXISTING OVERHEAD COMMUNICATION CABLE TO BE REMOVED
- EXISTING UNDERGROUND COMMUNICATION CABLE TO BE REMOVED

GRAPHIC SCALE

50 25 0 50 100

1" = 50'-0" HORIZ.

Precision Systems, Inc.
Engineers, Planners and Architects
WASHINGTON, D.C.

APPROVED BY _____ DATE _____

SG-09

DISTRICT OF COLUMBIA
DEPARTMENT OF TRANSPORTATION
INFRASTRUCTURE PROJECT MANAGEMENT ADMINISTRATION

KENNEDY STREET, N.W. IMPROVEMENT
FROM GEORGIA AVENUE TO NORTH CAPITOL STREET
EXISTING COMMUNICATION CABLE PLAN – 1

SUBMITTED BY _____ PROJECT ENGINEER _____ DATE
RECOMMENDED _____ GROUP MANAGER _____ DATE
APPROVED _____ ITS, SYSTEMS SUPPORT BRANCH MANAGER _____ DATE 4/8/2015
William W. McGuirk
SAFETY, STANDARDS AND DATA ANALYSIS, MANAGER _____ DATE
DEPUTY PROGRAM MANAGER _____ DATE 4/8/2015
William W. McGuirk
PROGRAM MANAGER _____ DATE

STAGE	1
FIELD CHECKED BY	AYY/WZ
DESIGNED BY	AYY
DRAWN BY	WZ/YZ
REVIEWED BY	AYY
DATE	02 /15
SCALE	1" = 50'
SHEET / OF	1 / 5
DRAWING NO.	

p:\60570\for printing\signal\plans\Comm\pCM-E001-60570.dgn
Tuesday, July 28, 2015 AT 05:00 PM

REVISION								
DESCRIPTION	DATE	COR.	CHK.	APP.	APP.	APP.	APP.	APP.

REG	STATE	PROJECT	SHEET NO.	TOTAL SHEETS
3	D.C.	FAP No. STP-8888(480)	170	173

EXISTING COMMUNICATION CABLE PLAN-2

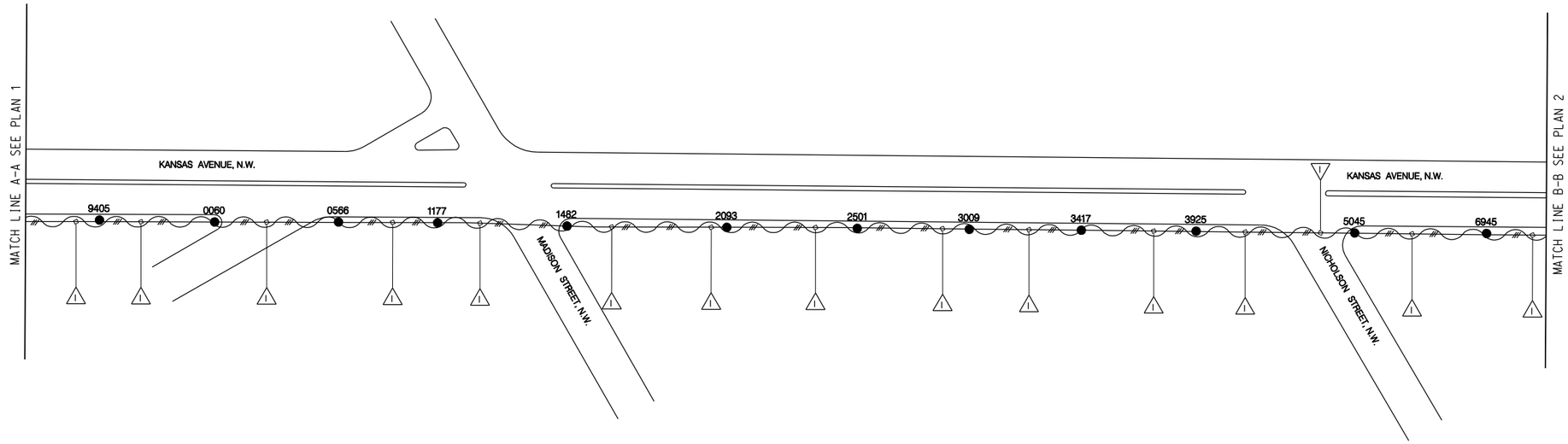

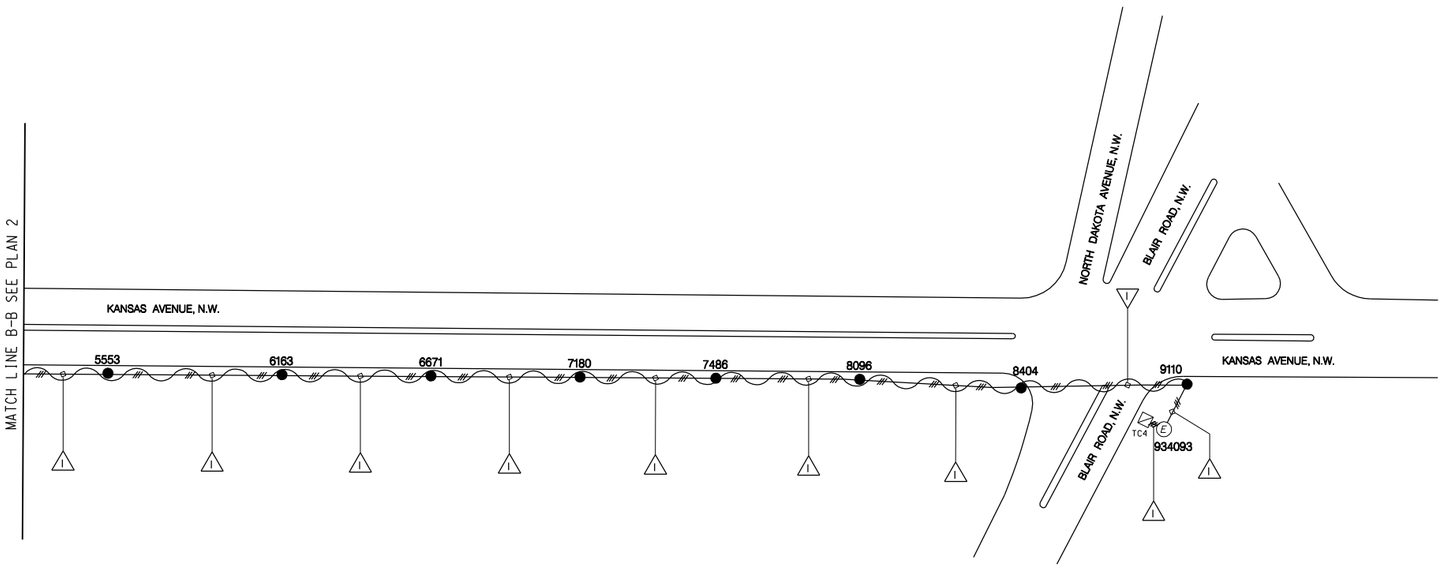

REMOVAL NOTE:

1. THE CONTRACTOR SHALL REMOVE THE EXISTING 12 PAIR OVERHEAD COMMUNICATION CABLE ALONG KANSAS AVENUE, N,W, BETWEEN THE EXISTING CONTROLLERS LOCATED AT MISSOURI AVENUE, N.W. (TC1) AND BLAIR ROAD, N.W. (TC4).
2. THE EXISTING COMMUNICATON CABLE SHALL NOT BE REMOVED UNTIL THE NEW CABLE IS INSTALLED AND OPERATIONAL.

LEGEND:

- TC — EXISTING TRAFFIC SIGNAL CONTROLLER
- EXISTING WOOD POLE
- (E) — EXISTING PEPCO MANHOLE
- 1-12 PAIR COMMUNICATION CABLE
- EXISTING OVERHEAD COMMUNICATION CABLE TO BE REMOVED
- EXISTING UNDERGROUND COMMUNICATION CABLE TO BE REMOVED

GRAPHIC SCALE
50 25 0 50 100
1" = 50'-0" HORIZ.

Precision Systems, Inc.
Engineers, Planners and Architects
WASHINGTON, D.C.

APPROVED BY _____ DATE _____

SG-10

DISTRICT OF COLUMBIA
DEPARTMENT OF TRANSPORTATION
INFRASTRUCTURE PROJECT MANAGEMENT ADMINISTRATION

KENNEDY STREET, N.W. IMPROVEMENT
FROM GEORGIA AVENUE TO NORTH CAPITOL STREET
EXISTING COMMUNICATION CABLE PLAN – 2

SUBMITTED BY _____ PROJECT ENGINEER _____ DATE
RECOMMENDED _____ GROUP MANAGER _____ DATE
APPROVED _____ ITS, SYSTEMS SUPPORT BRANCH, MANAGER William W. McGuirk 4/8/2015 DATE
SAFETY, STANDARDS AND DATA ANALYSIS, MANAGER _____ DATE
DEPUTY PROGRAM MANAGER _____ DATE
William W. McGuirk 4/8/2015
PROGRAM MANAGER _____ DATE

STAGE	1
FIELD CHECKED BY	AYYWZ
DESIGNED BY	AYY
DRAWN BY	WZYZ
REVIEWED BY	AYY
DATE	02 /15
SCALE	1" = 50'
SHEET	2 OF 5
DRAWING NO.	

p:\60570\for printing\signal\plans\Comm\pCM_E002_60570.dgn
Tuesday, July 28, 2015 AT 05:01 PM

REVISION								
DESCRIPTION	DATE	COR.	CHK.	APP.	APP.	APP.	APP.	APP.

REG	STATE	PROJECT	SHEET NO.	TOTAL SHEETS
3	D.C.	FAP No. STP-8888(480)	171	173

PROPOSED COMMUNICATION CABLE PLAN - 1

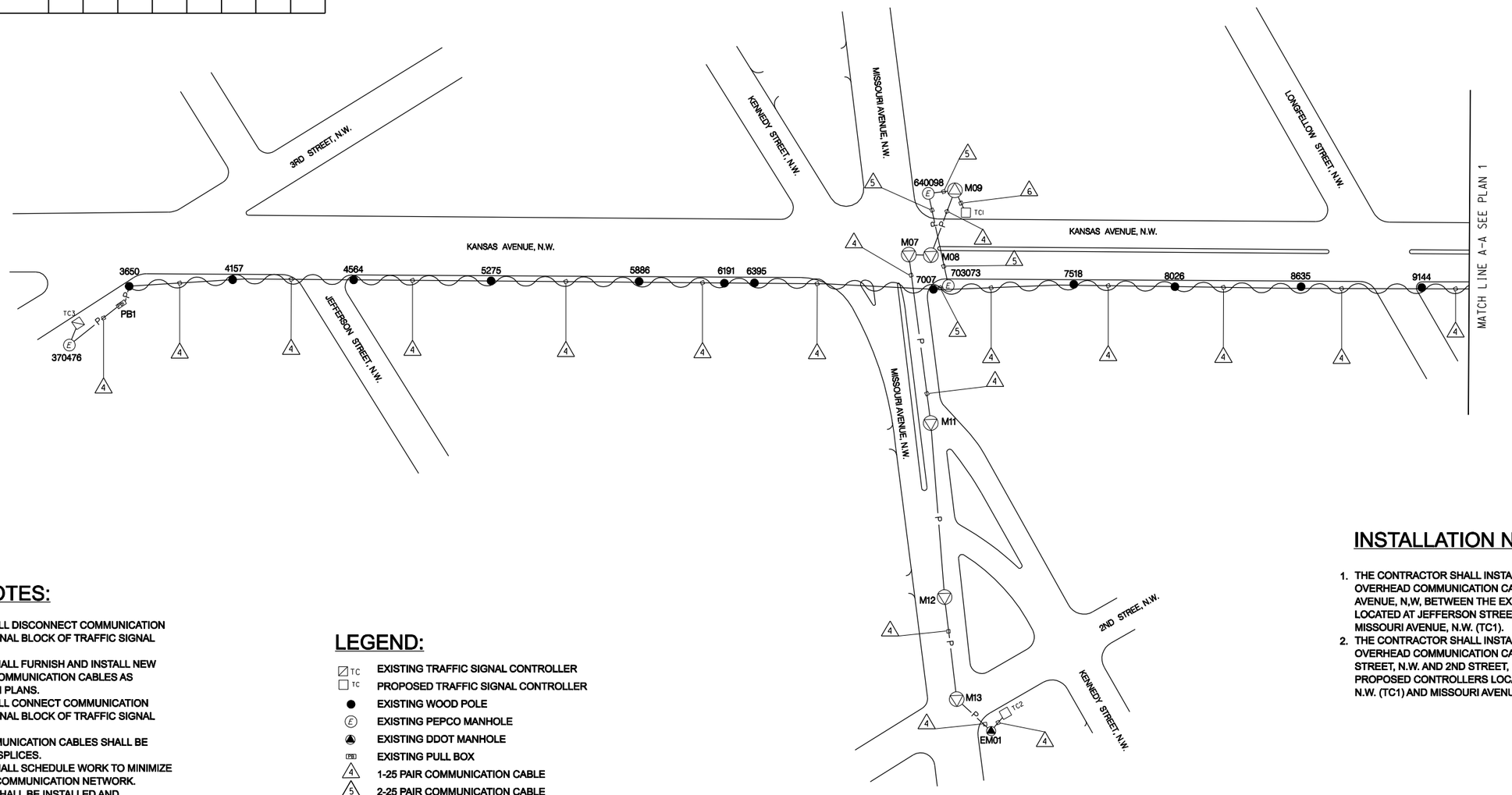

INSTALLATION NOTES:

1. THE CONTRACTOR SHALL INSTALL PROPOSED 25 PAIR OVERHEAD COMMUNICATION CABLE ALONG KANSAS AVENUE, N,W, BETWEEN THE EXISTING CONTROLLERS LOCATED AT JEFFERSON STREET, N.W. (TC3) AND MISSOURI AVENUE, N.W. (TC1).
2. THE CONTRACTOR SHALL INSTALL PROPOSED 25 PAIR OVERHEAD COMMUNICATION CABLE ALONG KENNEDY STREET, N.W. AND 2ND STREET, N.W. BETWEEN THE PROPOSED CONTROLLERS LOCATED AT KANSAS AVENUE, N.W. (TC1) AND MISSOURI AVENUE, N.W. (TC2).

GENERAL NOTES:

1. DDOT PERSONNEL WILL DISCONNECT COMMUNICATION CABLES IN THE TERMINAL BLOCK OF TRAFFIC SIGNAL CONTROLLERS.
2. THE CONTRACTOR SHALL FURNISH AND INSTALL NEW UNSPLICED 25 PAIR COMMUNICATION CABLES AS PROPOSED SHOWN IN PLANS.
3. DDOT PERSONNEL WILL CONNECT COMMUNICATION CABLES IN THE TERMINAL BLOCK OF TRAFFIC SIGNAL CONTROLLERS.
4. ALL PROPOSED COMMUNICATION CABLES SHALL BE INSTALLED WITHOUT SPLICES.
5. THE CONTRACTOR SHALL SCHEDULE WORK TO MINIMIZE DISRUPTION TO THE COMMUNICATION NETWORK. PROPOSED CABLES SHALL BE INSTALLED AND CONNECTED IMMEDIATELY AFTER EXISTING CABLES ARE DISCONNECTED.
6. INSTALLATION DIMENSIONS SHOWN ARE APPROXIMATE. MODIFICATIONS SHALL BE MADE AS REQUIRED UNDER APPROVAL FROM THE ENGINEER.
7. THE EXISTING COMMUNICATION CABLE SHALL NOT BE REMOVED UNTIL THE NEW CABLE IS INSTALLED AND OPERATIONAL.

LEGEND:

- TC — EXISTING TRAFFIC SIGNAL CONTROLLER
- TC — PROPOSED TRAFFIC SIGNAL CONTROLLER
- EXISTING WOOD POLE
- EXISTING PEPCO MANHOLE
- EXISTING DDOT MANHOLE
- PB — EXISTING PULL BOX
- 4 — 1-25 PAIR COMMUNICATION CABLE
- 5 — 2-25 PAIR COMMUNICATION CABLE
- 6 — 3-25 PAIR COMMUNICATION CABLE
- PROPOSED OVERHEAD COMMUNICATION CABLES TO BE INSTALLED
- P — PROPOSED UNDERGROUND COMMUNICATION CABLES TO BE INSTALLED

GRAPHIC SCALE

50 25 0 50 100

1" = 50'-0" HORIZ.

PSI

Precision Systems, Inc.
Engineers, Planners and Architects
WASHINGTON, D.C.

APPROVED BY _____ DATE

SG-11

DISTRICT OF COLUMBIA
DEPARTMENT OF TRANSPORTATION
INFRASTRUCTURE PROJECT MANAGEMENT ADMINISTRATION

KENNEDY STREET, N.W. IMPROVEMENT
FROM GEORGIA AVENUE TO NORTH CAPITOL STREET
PROPOSED COMMUNICATION CABLE PLAN – 1

SUBMITTED BY _____ PROJECT ENGINEER _____ DATE
RECOMMENDED _____ GROUP MANAGER _____ DATE
APPROVED _____ ITS SYSTEMS SUPPORT BRANCH MANAGER _____ DATE
William W. McGuirk 4/8/2015
SAFETY, STANDARDS AND DATA ANALYSIS, MANAGER _____ DATE
DEPUTY PROGRAM MANAGER _____ DATE
William W. McGuirk 4/8/2015
PROGRAM MANAGER _____ DATE

FINAL
FIELD CHECKED BY AYY/WZ
DESIGNED BY AYY
DRAWN BY WZ/YZ
REVIEWED BY AYY
DATE 02 /15
SCALE 1" = 50'
SHEET 3 OF 5
DRAWING NO.

p:\60570\for printing\signal\plans\Comm\pCM_P001_60570.dgn
Tuesday, July 28, 2015 AT 05:01 PM

REVISION								
DESCRIPTION	DATE	COR.	CHK.	APP.	APP.	APP.	APP.	APP.

REG	STATE	PROJECT	SHEET NO.	TOTAL SHEETS
3	D.C.	FAP No. STP-8888(480)	172	173

PROPOSED COMMUNICATION CABLE PLAN-2

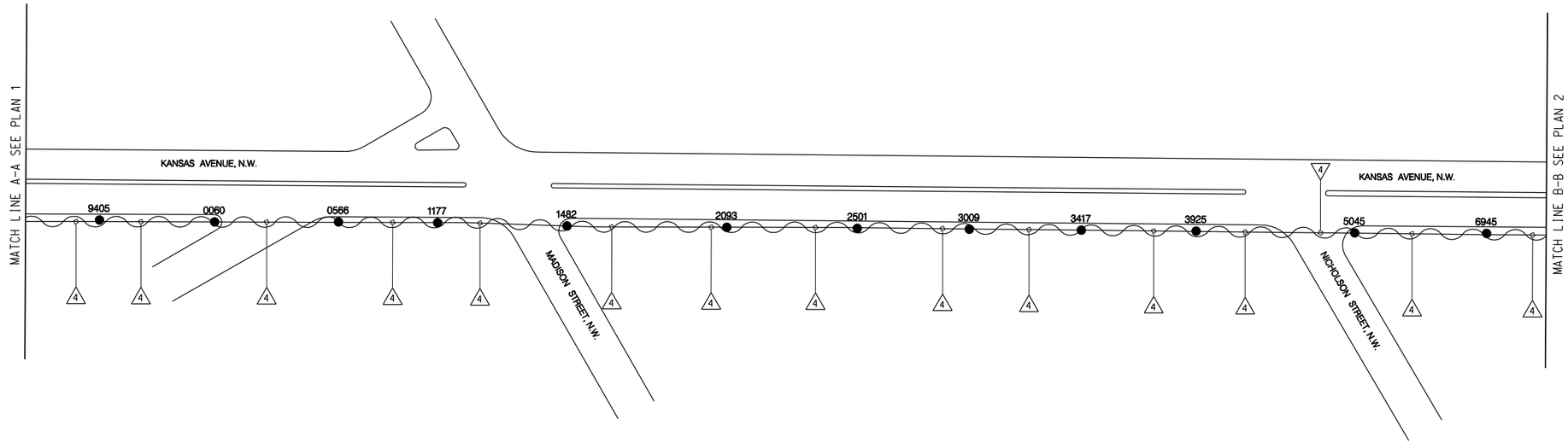

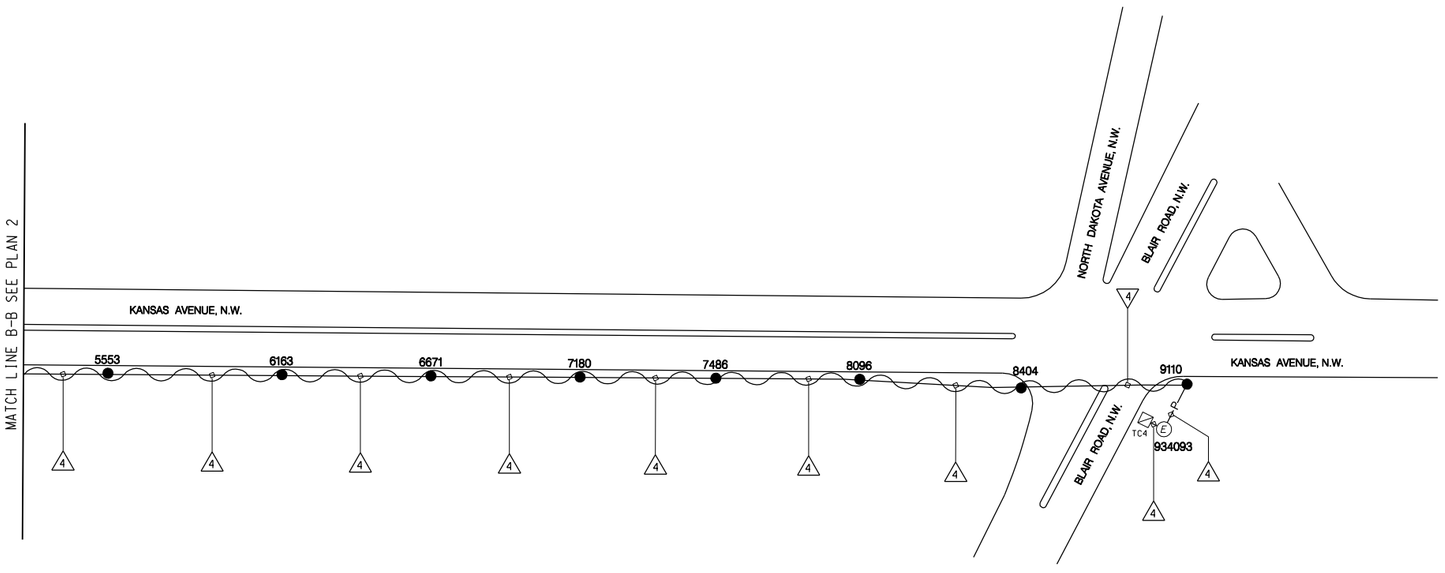

GENERAL NOTES:

1. DDOT PERSONNEL WILL DISCONNECT COMMUNICATION CABLES IN THE TERMINAL BLOCK OF TRAFFIC SIGNAL CONTROLLERS.
2. THE CONTRACTOR SHALL FURNISH AND INSTALL NEW UNSPLICED 25 PAIR COMMUNICATION CABLES AS PROPOSED SHOWN IN PLANS.
3. DDOT PERSONNEL WILL CONNECT COMMUNICATION CABLES IN THE TERMINAL BLOCK OF TRAFFIC SIGNAL CONTROLLERS.
4. ALL PROPOSED COMMUNICATION CABLES SHALL BE INSTALLED WITHOUT SPLICES.
5. THE CONTRACTOR SHALL SCHEDULE WORK TO MINIMIZE DISRUPTION TO THE COMMUNICATION NETWORK. PROPOSED CABLES SHALL BE INSTALLED AND CONNECTED IMMEDIATELY AFTER EXISTING CABLES ARE DISCONNECTED.
6. INSTALLATION DIMENSIONS SHOWN ARE APPROXIMATE. MODIFICATIONS SHALL BE MADE AS REQUIRED UNDER APPROVAL FROM THE ENGINEER.
7. THE EXISTING COMMUNICATION CABLE SHALL NOT BE REMOVED UNTIL THE NEW CABLE IS INSTALLED AND OPERATIONAL.

INSTALLATION NOTE:

1. THE CONTRACTOR SHALL INSTALL PROPOSED 25 PAIR OVERHEAD COMMUNICATION CABLE ALONG KANSAS AVENUE, N,W, BETWEEN THE PROPOSWED CONTROLLER LOCATED AT MISSOURI AVENUE, N.W. (TC1) AND THE EXISTING CONTROLLER LOCATED AT BLAIR ROAD, N.W. (TC4).

LEGEND:

- EXISTING TRAFFIC SIGNAL CONTROLLER
- PROPOSED TRAFFIC SIGNAL CONTROLLER
- EXISTING WOOD POLE
- EXISTING PEPCO MANHOLE
- 1-25 PAIR COMMUNICATION CABLE
- PROPOSED OVERHEAD COMMUNICATION CABLES TO BE INSTALLED
- PROPOSED UNDERGROUND COMMUNICATION CABLES TO BE INSTALLED

SG-12

GRAPHIC SCALE
50 25 0 50 100
1" = 50'-0" HORIZ.

Precision Systems, Inc.
Engineers, Planners and Architects
WASHINGTON, D.C.

APPROVED BY _____ DATE _____

DISTRICT OF COLUMBIA
DEPARTMENT OF TRANSPORTATION
INFRASTRUCTURE PROJECT MANAGEMENT ADMINISTRATION

KENNEDY STREET, N.W. IMPROVEMENT
FROM GEORGIA AVENUE TO NORTH CAPITOL STREET
PROPOSED COMMUNICATION CABLE PLAN – 2

SUBMITTED BY _____ PROJECT ENGINEER _____ DATE
RECOMMENDED _____ GROUP MANAGER _____ DATE
APPROVED _____ ITS, SYSTEMS SUPPORT BRANCH MANAGER William W. McGuirk DATE 4/8/2015
SAFETY, STANDARDS AND DATA ANALYSIS, MANAGER _____ DATE
DEPUTY PROGRAM MANAGER _____ DATE
PROGRAM MANAGER William W. McGuirk DATE 4/8/2015

FINAL	
FIELD CHECKED BY	AYY/WZ
DESIGNED BY	AYY
DRAWN BY	WZYZ
REVIEWED BY	AYY
DATE	02 /15
SCALE	1" = 50'
SHEET / OF	4 / 5
DRAWING NO.	

p:\60570\for printing\signal\plans\Comm\pCM_P002_60570.dgn
Tuesday, July 28, 2015 AT 05:02 PM

REVISION								
DESCRIPTION	DATE	COR.	CHK.	APP.	APP.	APP.	APP.	APP.

REG	STATE	PROJECT	SHEET NO.	TOTAL SHEETS
3	D.C.	FAP No. STP-8888(480)	173	173

PROPOSED COMMUNICATION CABLE SCHEMATIC

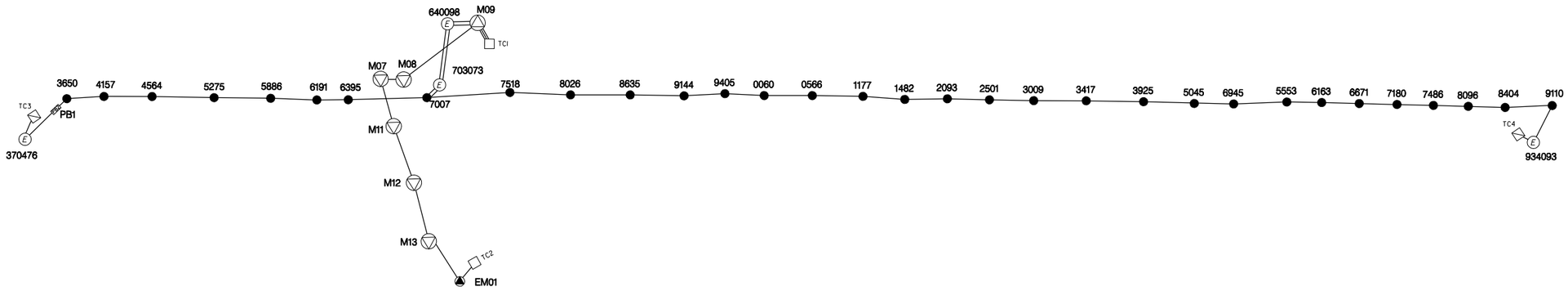

PROPOSED COMMUNICATION CABLE ROUTING

TC3 - 370476 - PB1 - 3650 - 4157 - 4564 - 5275 - 5886 - 6191 - 6395 - 7007 - 703073- 640098 - M09 - TC1 (25 PAIR)

TC1 - M09 - M08 - M07 - M11 - M12 - M13 - EM01 - TC2 (25 PAIR)

TC1 - M09 - 640098 - 703073 - 7007 - 7518 - 8026 - 8635 - 9144 - 9405 - 0060 - 0566 - 1177 - 1482 - 2093 - 2501 - 3009 - 3417 - 3925 - 5045 - 6945 - 5553 - 6163 - 6671 - 7180 - 7486 - 8096 - 8404 - 9110 - 934093 - TC4(25 PAIR)

SG-13

GRAPHIC SCALE

50 25 0 50 100

1" = 50'-0" HORIZ.

Precision Systems, Inc.
Engineers, Planners and Architects
WASHINGTON, D.C.

APPROVED BY _____ DATE _____

DISTRICT OF COLUMBIA
DEPARTMENT OF TRANSPORTATION
INFRASTRUCTURE PROJECT MANAGEMENT ADMINISTRATION

KENNEDY STREET, N.W. IMPROVEMENT
FROM GEORGIA AVENUE TO NORTH CAPITOL STREET
PROPOSED COMMUNICATION CABLE PLAN – 3

SUBMITTED BY _____ PROJECT ENGINEER _____ DATE
RECOMMENDED _____ GROUP MANAGER _____ DATE
APPROVED _____ ITS, SYSTEMS SUPPORT BRANCH MANAGER _____ DATE 4/8/2015
_____ SAFETY, STANDARDS AND DATA ANALYSIS, MANAGER _____ DATE
_____ DEPUTY PROGRAM MANAGER _____ DATE
_____ PROGRAM MANAGER _____ DATE 4/8/2015

FINAL	
FIELD CHECKED BY	AYY/WZ
DESIGNED BY	AYY
DRAWN BY	WZ/YZ
REVIEWED BY	AYY
DATE	02 /15
SCALE	N.T.S.
SHEET / OF	5 / 5
DRAWING NO.	

p:\60570\for printing\signal\plans\Comm\pCM_P003_60570.dgn
Tuesday, July 28, 2015 AT 05:02 PM