ATTACHMENT J.4 PEPCO STANDARD DETAILS AND DRAWINGS

PEPCO STANDARD DETAILS AND DRAWINGS (130 Sheets)

- PVC & FIBERGLASS CONCRETE ENCASEMENT 2-2-0480.1.1 (1 PAGE)
- BUILT-UP METHOD FOR FIBERGLASS AND PVC CONDUIT 2-2-0468.1.1 (1 PAGE)
- DUCT TRANSPOSITION SEQUENCE AND SPACER REQUIREMENTS 4-2-1099.1.4 - 4.4 (4 PAGES)
- CONDUIT STOCK LIST 1365.1.4 - 4.4 (4 PAGES)
- CABLE PULLING – IN IRON 0227.1.1 (1 PAGE)
- GROUNDING FOR STANDARD MANHOLE 2-2-1096.1.1 (1 PAGE)
- INSERTS FOR PRECAST MANHOLES 6’ X ‘6 – 6’ X 22’ 4-2-1244 (1 PAGE)
- SUMP PIT FOR STANDARD MANHOLE 2-2-1060.1.1 (1 PAGE)
- CONCRETE REQUIRED FOR MANHOLES 2-2-0730.1.1 (1 PAGE)
- METHOD OF SHORING FOR MANHOLE CONSTRUCTION 2-2-0460.1.1 (1 PAGE)
- METHOD OF INSTALLING MANHOLE FLOORS 2-2-0461.1.1 (1 PAGE)
- METHOD OF INSTALLING MANHOLE FRAME & COVER 0474.1.2 – 2.2 (2 PAGES)
- MANHOLE RECESS 0733.1.2 (1 PAGE)
- MANHOLE CORNER RECESS 0733.2.2 (1 PAGE)
- 4’- 6” X 6’-0” ROADWAY MANHOLE 2-2-0709 (1 PAGE)
- PRECAST ROADWAY ROOF FOR 4’- 6” X 6’-0” MANHOLE 2-2-0718.1.2 & 2.2 (2 PAGES)
- PRECAST SIDEWALK ROOF FLUSH TYPE FOR 4’-6” X 6’ 2-2-1146.1.2 & 2.2 (2 PAGES)
- GILLESPIE 4’-6” X 6’-0” PRECAST MANHOLE CUTSHEET (1 PAGE)
- 28” MANHOLE COVER RING FRAME SIDEWALK TYPE 2-2-0428.1.2 & 2.2 (2 PAGES)
- 28” MANHOLE 1-1/2” ADJUSTING RING FRAME 2-2-0429.1.2 & 2.2 (2 PAGES)
- 28” MANHOLE 2” ADJUSTING RING FRAME 2-2-043.1.2 & 2.2 (2 PAGES)
- 28” MANHOLE COVER 2-2-0431.1.2 & 2.2 (2 PAGES)
- 28” MANHOLE COVER FRAME – ROADWAY TYPE 2-2-0432.1.2 & 2.2 (2 PAGES)
- 28” MANHOLE COVER FRAME SIDEWALK TYPE 0433.1.3 – 3.3 (3 PAGES)
- 6’ X 12’ MANHOLE (CAST IN PLACE) 0418_1.6 (1 PAGE)
- NOTES FOR 6’-0” X 12’-0” MANHOLE 0418_2.6 (1 PAGE)
- REINFORCEMENT FOR 6’ X 12’ MANHOLE 0418_3.5 & 4.6 (2 PAGES)
- 6’ X 12’ MH ROOF 0418_5.6 & 6.6 (2 PAGES)
- GILLESPIE 6’-0” X 12’-0” X 7’-0” PRECAST MH BASE PEPCO LINE OR BUSS MH CUTSHEET (2 PAGES)
- GILLESPIE 6’-0” X 12’-0” X 3’-0” PRECAST MH PRECAST MH RISER PEPCO LINE VAULT – 10’-0” H.R. CUTSHEET (1 PAGE)
- GILLESPIE 6’-0” X 12’-0” X 5’-0” PRECAST MH PRECAST MH RISER PEPCO LINE VAULT – 12’-0” H.R. CUTSHEET (1 PAGE)
- 6’-0” X 14’-0” MANHOLE (CAST IN PLACE) 0333_1.6 (1 PAGE)
- NOTES FOR 6’-0” X 14’-0” MANHOLE 0333.2.6 (1 PAGE)
- REINFORCEMENT FOR 6’ X 14’ MANHOLE 0333_3.6 & 4.6 (2 PAGES)
- 6’-0” X 14’-0” MH ROOFS 0333_5.6 (1 PAGE)
- 6’ X 14’ MH ENGINEERING ASSEMBLIES BREAKDOWN 0333.6.6 (1 PAGE)

- ROOF DETAIL & TOP VIEW OF ONE 3-WAY SWITCH TWO FUSEBOX, 8KV SUBWAY INSTALLATION 1352.1.6 – 6.6 (6 PAGES)
- GILLESPIE 6’-0” X 14’-0” PRECAST MANHOLE BASE CUTSHEET (1 PAGE)
- GILLESPIE 6’-0” X 14’-0” PRECAST MANHOLE RISER CUTSHEET (1 PAGE)
- 40” MANHOLE COVER FRAME FOR DOUBLE COVER – SIDEWALK TYPE 2-2-0423.1.3 – 3.3 (3 PAGES)
- 40” MANHOLE COVER FRAME FOR DOUBLE COVER – ROADWAY TYPE 2-2-0427.1.2 & 2.2 (2 PAGES)
- 40” MANHOLE RING COVER 2-2-0434.1.2 & 2.2 (2 PAGES)
- 40” MANHOLE COVER RING FRAME FOR DOUBLE COVER – SIDEWALK TYPE 2-2-1081.1.2 & 2.2 (2 PAGES)
- PRECAST CONCRETE COLLAR FOR U.G. TO O.H. CONNECTION 2-2-0471.1.1 (1 PAGE)
- POLE RISER SHIELD U.G. TO O.H. CONNECTION ASSEMBLY CONSTRUCTION 4-2-0727.1.2. (1 PAGE)
- OVERHEAD REFERENCE FOR SWEEP BEND INSTALLATION 4-2-0727.2.2 (1 PAGE)
- 1PH SUBSURFACE TRANSFORMER INSTALLATIONS 0887.1.3 & 2.3 (2 PAGES)
- SUBSURFACE TRANSFORMER INSTALLATION WITH ROADWAY GRATINGS (PEPCO COMPATIBLE UNITS) 0887.3.3 (1 PAGE)
- CONCRETE WELL CASING W/ K.O.’S 36” I.D. X 24” 0889.1.1 (1 PAGE)
- SUBSURFACE TAMPER SHIELD & CHIMNEY BAFFLE 2-7-0890.1.1 (1 PAGE)
- CONCRETE GRATING FRAME FOR URD SUBSURFACE ENCLOSURE 2-7-0927.1.1 (1 PAGE)
- URD WELL GRATING 2-7-0930.1.1 (1 PAGE)
- 3.5’ X 3.5’ URD RECTANGULAR CASING 2-2-1084.1.1 (1 PAGE)
- BILCO DOOR SDWK ROOF FOR 3.5’ X 3.5’ URD RECTANGULAR CASING 2-2-1129.1.1 (1 PAGE)
- MOUNTING PADS FOR THREE PHASE PADMOUNT TRANSFORMERS 0983_1.4-4.4 (4 PAGES)
- CLEARANCES OF OIL FILLED EQUIPMENT TO BUILDINGS, WINDOWS, ETC. AND PROTECTION OF EQUIPMENT EXPOSED TO TRAFFIC J-380 – J-380.3 (4 PAGES)
- SPLICE BOX DETAILS 1695.1.3 – 3.3 (3 PAGES)
- SINGLE PHASE LOW PROFILE PADMOUNT TRANSFORMER INSTALLATION 1252.1.4-4.4 (4 PAGES)
- TYPICAL BRIDGING FOR 6’-0” X 10’-0” ROADWAY MANHOLE 2-2-0655.1 (1 PAGE)
- DRAINAGE DUCT BETWEEN ADJACENT MANHOLES 2-2-1097.1.1 (1 PAGE)
- STEEL FORM FOR 4’-6” X 6’-0” MANHOLE 2-2-0493.1.1 (1 PAGE)
- STEEL FORM FOR 6’-0” X 14’-0” MANHOLE 2-2-0496.1 (1 PAGE)
- STEEL FORM FOR 6’-0” X 12’-0” MANHOLE 2-2-1171.1.1 (1 PAGE)
- SPACERS FOR SIDEWALK AND ROADWAY MANHOLE REMOVABLE ROOFS 2-2-1386.1.2 & 2.2 (2 PAGES)
- 2’-0” X 6’-10” FLUSH TYPE ROOF SCABS FOR SIDEWALK MANHOLES 2-2-1177.1.5 (5 PAGES)
- 4’-0” X 6’-10” FLUSH TYPE ROOD SLABS FOR SIDEWALK MANHOLES 2-2-1327.1.14-14.14 (14 PAGES)
- PRECAST ROADWAY ROOF FOR 6’X6’ MANHOLE 2-2-1141.1.1 (1 PAGE)
- FRAMES FOR FLUSH TYPE MANHOLE FOR SIDEWALK AND ROADWAY 2-2-1184.1.2 & 2.2 (2 PAGES)
- SCHEDULE OF FABRICATED WALER FRAMING 4-2-0729.1.1 (1 PAGE)

2-2-0480.1.1

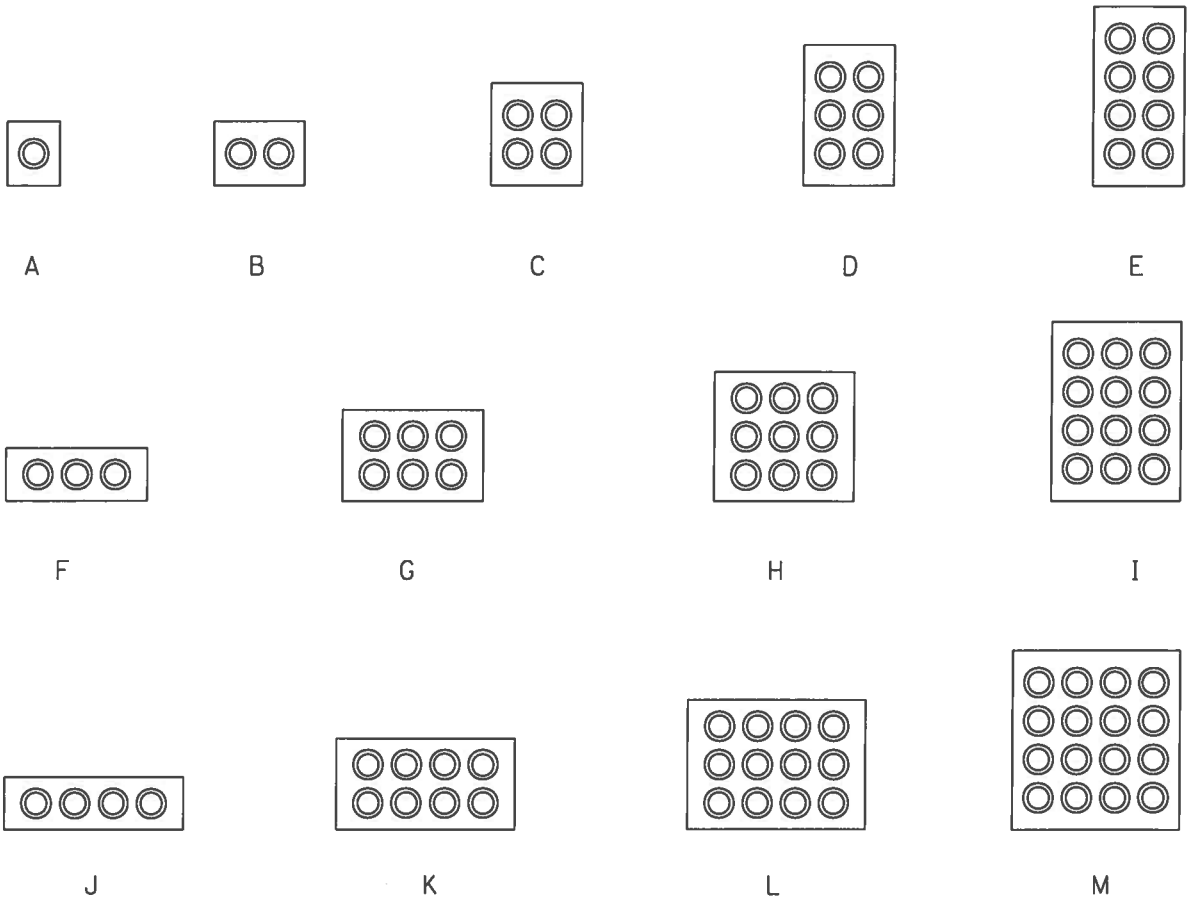

TABLE OF APPROXIMATE CUBIC YARDS OF CONCRETE FOR 100 FEET OF CONDUIT WITH 3 INCHES OF CONCRETE ENVELOPE ON TOP AND THE BASE, AND 2 INCHES OF CONCRETE ON BOTH SIDES WITH 1½ INCHES SEPARATION OF DUCT.

DUCT FORMATION	NO. OF DUCTS	SIZE OF DUCTS			
		3"	4"	5"	6"
			6" C/C	7" C/C	8"C/C
A	1	1.6	1.9	2.2	3.2
B	2	2.6	3.1	3.6	5.2
C	4		4.5	5.3	7.4
D	6		5.9	7.0	9.6
E	8		7.4	8.7	11.8
F	3		4.3	5.1	7.0
G	6		6.2	7.4	10.0
H	9		8.2	9.7	13.2
I	12		10.1	12.0	16.2
J	4		5.5	6.5	9.0
K	8		8.0	9.4	12.8
L	12		10.4	12.4	16.6
M	16		12.9	15.4	20.4

NOTE:
REV A: CHANGED DWG FORMAT.

DRAWN: DPJ	DVLPED: FM DATE: 07-01-84	REVIEWED: TWM DATE: 10-15-08	APPRVD: MDW DATE: 10-29-08	NEXT REVIEW: 10-11	REV: A

PHI PEPCO

POWER DISTRIBUTION STANDARDS

PVC & FIBERGLASS CONCRETE ENCASEMENT

2-2-0468.1.1

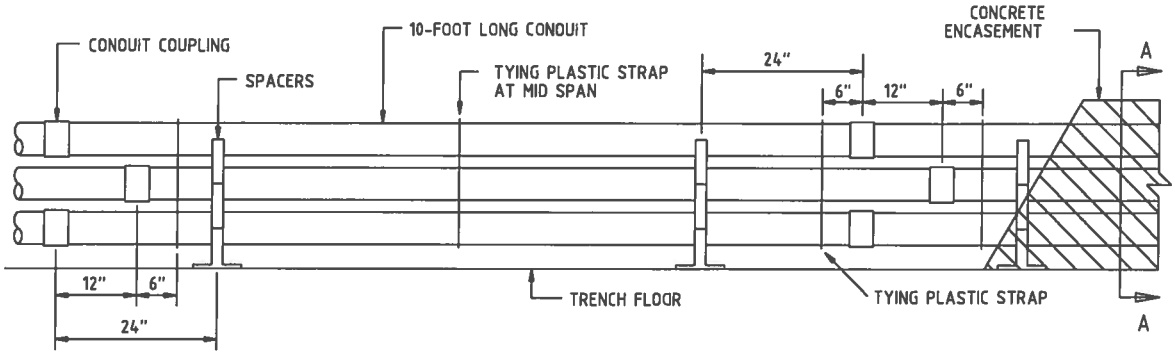

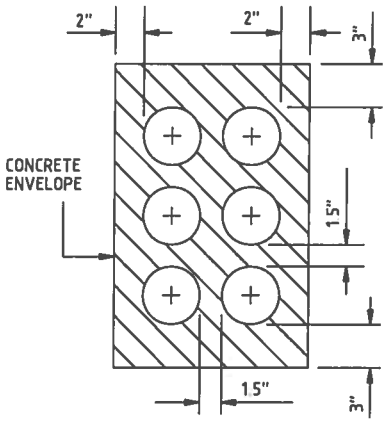

SECTION A-A
(TYPICAL 6-WAY)

INTERMEDIATE SPACERS

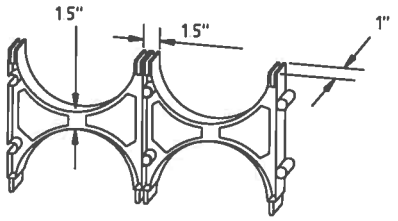

BASE SPACERS

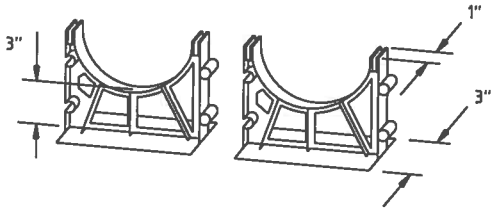

STOCK NO.:	DESCRIPTION:
9721-0147	SPACER, PLASTIC, 4", BASE
9721-0150	SPACER, PLASTIC, 4", INTERMEDIATE
9721-0148	SPACER, PLASTIC, 5", BASE
9721-0152	SPACER, PLASTIC, 5", INTERMEDIATE
9721-0154	SPACER, PLASTIC, 6", BASE
9721-0155	SPACER, PLASTIC, 6", INTERMEDIATE

NOTES:

1. THE CONDUIT SHALL BE PLACED IN SUCH A WAY AS TO STAGGER THE LOCATION OF THE COUPLINGS BOTH HORIZONTALLY AND VERTICALLY.
2. BASE AND INTERMEDIATE SPACERS ARE TO BE INTERLOCKED BOTH VERTICALLY AND HORIZONTALLY.
3. BASE SPACERS PROVIDE A 3" SEPARATION BETWEEN BOTTOM ROW OF DUCTS AND TRENCH FLOOR. INTERMEDIATE SPACERS PROVIDE A 1-1/2" SEPARATION BETWEEN ADJACENT DUCTS.
4. SPACERS FROM DIFFERENT MANUFACTURERS MAY NOT BE COMPATIBLE WITH EACH OTHERS. IT IS IMPORTANT TO USE THE CORRECT SPACERS FOR PROPER INTERLOCK.
5. FOR 20-FOOT LONG CONDUIT, ONE ADDITIONAL SPACER IS REQUIRED AT THE MID SPAN.
6. WHEN TYING THE DUCT BANK, USE PLASTIC TYING STRAP.
7. THE FULL HEIGHT OF THE CONDUIT FORMATION SHALL BE CONSTRUCTED BEFORE ENCASEMENT.
8. REFER TO DRAWING 2-2-0480 FOR INSTRUCTIONS ON PVC & FIBERGLASS CONCRETE ENCASEMENT.

DRAWN: DPJ	DVLPED: JC DATE: 10/25/93	REVIEWED: TWM DATE: 10-15-08	APPRVD: MDW DATE: 10-29-08	NEXT REVIEW: 10-11	REV: A

PHI PEPCO

POWER DISTRIBUTION STANDARDS

BUILT-UP METHOD FOR FIBERGLASS AND PVC CONDUIT

4-2-1099.1.4

INTERMEDIATE SPACER

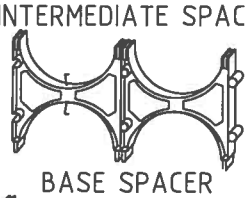

BASE SPACER

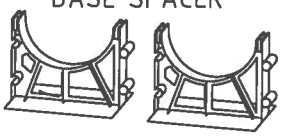

SEE NOTE 1 ON SHEET 4

SPACER STOCK NUMBERS

Intermediate:
4" = 9721-0150
5" = 9721-0152
6" = 9721-0155

Base:
4" = 9721-0147
5" = 9721-0148
6" = 9721-0154

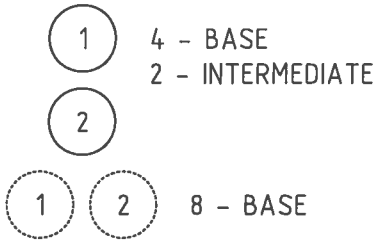

4 - BASE
2 - INTERMEDIATE

8 - BASE

2-WAY

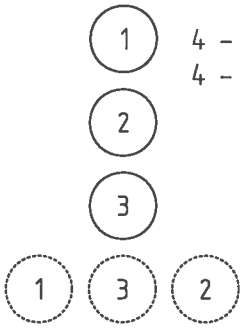

4 - BASE
4 - INTERMEDIATE

12 - BASE

3-WAY

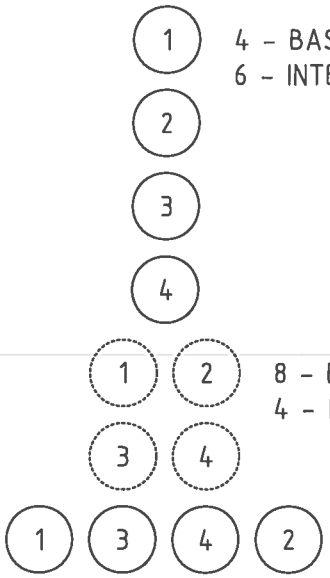

4 - BASE
6 - INTERMEDIATE

8 - BASE
4 - INTERMEDIATE

16 - BASE

4-WAY

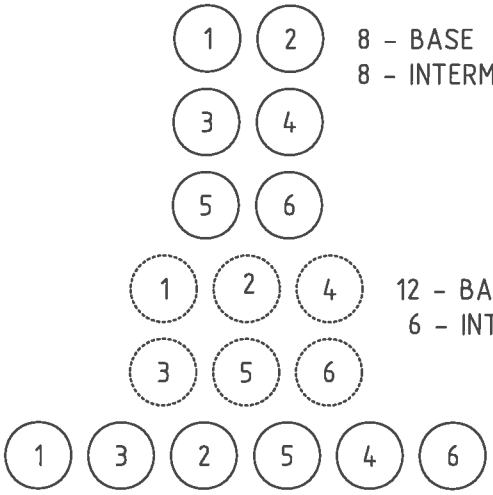

8 - BASE
8 - INTERMEDIATE

12 - BASE
6 - INTERMEDIATE

24 - BASE

6-WAY

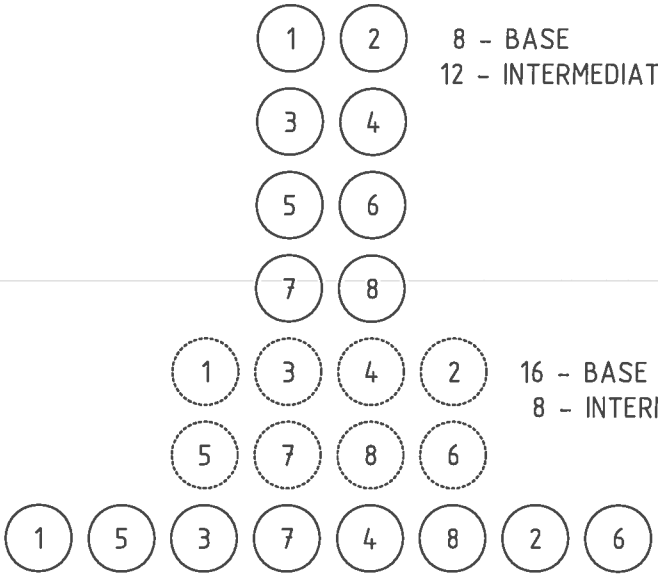

8 - BASE
12 - INTERMEDIATE

16 - BASE
8 - INTERMEDIATE

32 - BASE

8-WAY

NOTE: REV A: CHANGED FORMAT AND STOCK NO'S PER WMIS.
ALL SPACERS ARE BASED ON A 10 FOOT CONDUIT SECTION LENGTH; FRONT & BACK.

DRAWN: LKD	DVLPED: JC DATE: 09-01-92	REVIEWED: RLH DATE: 07-31-07	APPRVD: MDW DATE: 08-09-07	NEXT REVIEW: 05-09	REV: B

PHI PEPCO

POWER DISTRIBUTION STANDARDS

DUCT TRANSPOSITION SEQUENCE AND SPACER REQUIREMENTS

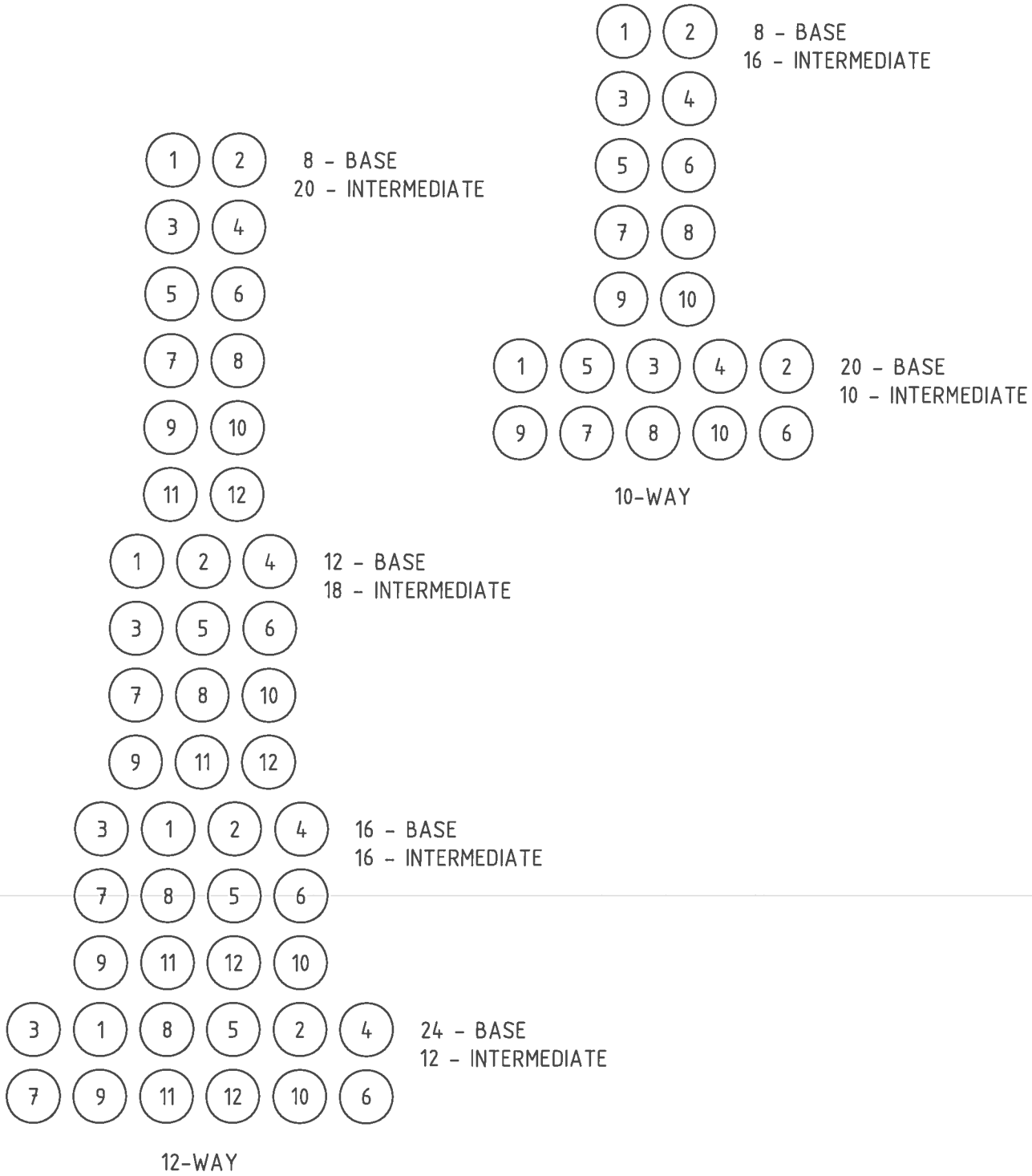

NOTE: REV A: CHANGED FORMAT AND STOCK NO'S PER WMIS.
ALL SPACERS ARE BASED ON A 10 FOOT CONDUIT SECTION LENGTH; FRONT & BACK.

DRAWN: LKD	DVLPED: JC DATE: 09-01-92	REVIEWED:RLH DATE: 07-31-07	APPRVD: MDW DATE: 08-09-07	NEXT REVIEW: 05-09	REV: B

PHI PEPCO

POWER DISTRIBUTION STANDARDS

DUCT TRANSPOSITION SEQUENCE AND SPACER REQUIREMENTS

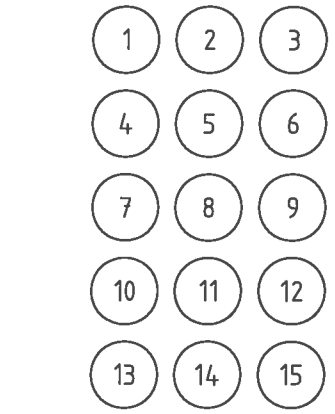

12 - BASE
24 - INTERMEDIATE

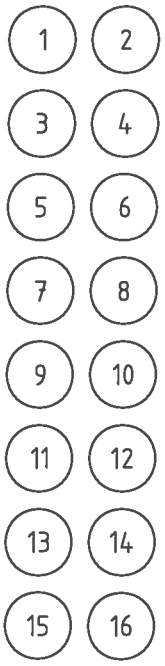

8 - BASE
28 - INTERMEDIATE

20 - BASE
20 - INTERMEDIATE

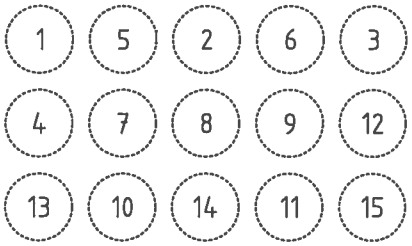

15-WAY

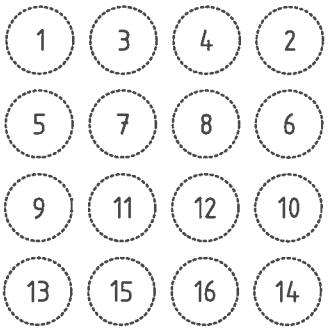

16 - BASE
24 - INTERMEDIATE

32 - BASE
16 - INTERMEDIATE

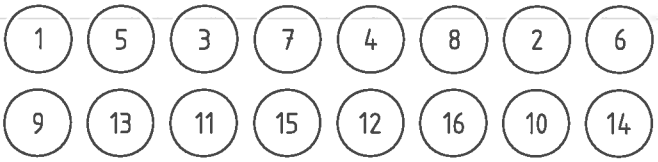

16-WAY

NOTE: REV A: CHANGED FORMAT AND STOCK NO'S PER WMIS.
ALL SPACERS ARE BASED ON A 10 FOOT CONDUIT SECTION LENGTH; FRONT & BACK.

DRAWN: LKD	DVLPED: JC DATE: 09-01-92	REVIEWED: RLH DATE: 07-31-07	APPRVD: MDW DATE: 08-09-07	NEXT REVIEW: 05-09	REV: B

PHI PEPCO

POWER DISTRIBUTION STANDARDS

DUCT TRANSPOSITION SEQUENCE AND SPACRE REQUIREMENTS

4-2-1099.4.4

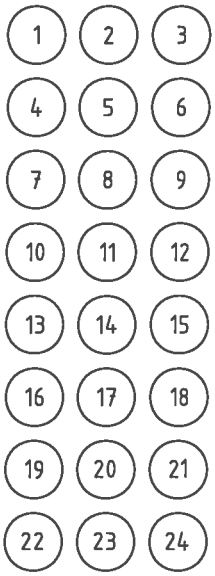

12 - BASE
42 - INTERMEDIATE

STOCK NO	COMP UNIT	DESCRIPTION
9721-0147	4BSPACERMY	4" BASE SPACER
9721-0148	5BSPACERMY	5" BASE SPACER
9721-0154	6BSPACERMY	6" BASE SPACER
9721-0150	4ISPACERMY	4" INTERMEDIATE SPACER
9721-0152	5ISPACERMY	5" INTERMEDIATE SPACER
9721-0155	6ISPACERMY	6" INTERMEDIATE SPACER

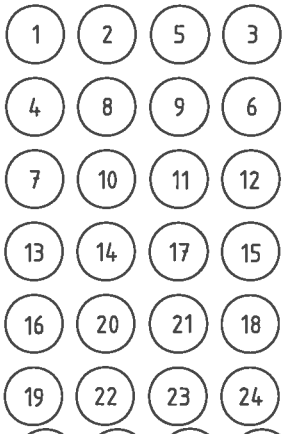

16 - BASE
40 - INTERMEDIATE

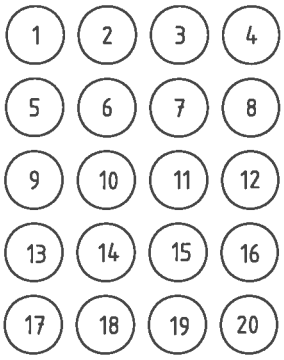

16 - BASE
32 - INTERMEDIATE

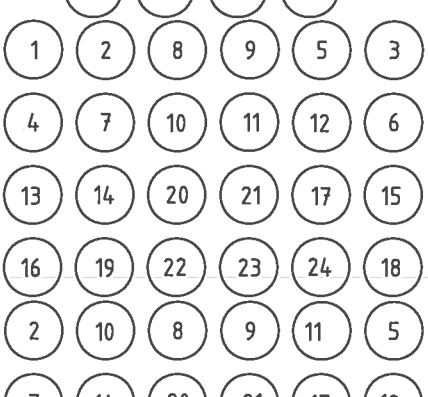

24 - BASE
36 - INTERMEDIATE

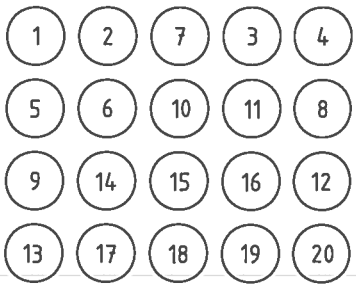

20 - BASE
30 - INTERMEDIATE

20-WAY

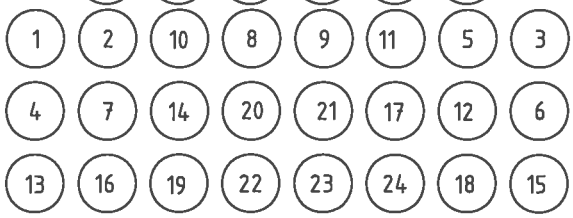

32 - BASE
32 - INTERMEDIATE

24-WAY

NOTE:

1. REFERENCE DRAWING 2-2-0468 FOR BUILT UP METHOD FOR FIBERGLASS AND PVC CONDUIT.
2. REV A: CHANGED DWG FORMAT AND STOCK NO PER WMIS.
3. ALL SPACERS ARE BASED ON A 10 FOOT CONDUIT SECTION LENGTH; FRONT & BACK.

DRAWN: LKD	DVLPED: JC DATE: 09-01-92	REVIEWED:RLH DATE: 07-31-07	APPRVD: MDW DATE: 08-09-07	NEXT REVIEW: 05-09	REV: B

PHI PEPCO

POWER DISTRIBUTION STANDARDS

DUCT TRANSPOSITION SEQUENCE AND SPACER REQUIRMENTS

FIBERGLASS CONDUIT RIGID

STOCK NO.	DESCRIPTION	COMPATIBLE UNIT	WALL THICKNESS
9721-0719*	CONDUIT, FG, 4"X10' LONG, IPS	4F1WEMY	0.070"
9721-0724	CONDUIT, FG, 5"X10' LONG, IPS	5F1WEMY	0.095"
9721-0728	CONDUIT, FG, 5"X20' LONG, IPS	5F1WLMY	0.095"
9721-0725	CONDUIT, FG, 6"X10' LONG, IPS	6F1WEMY	0.110"
9721-0729	CONDUIT, FG, 6"X20' LONG, IPS	6F1WLMY	0.110"

IPS - IRON PIPE SIZE
COMPATIBLE UNITS ALSO EXIST FOR DIFFERENT DEPARTMENTS, FUNCTIONS AND CONDUIT CONFIGURATIONS.

* - 4" FG conduit is being phased out, after stock is depleted, use 5" FG conduit instead.

PVC CONDUIT RIGID

STOCK NO.	DESCRIPTION	COMPATIBLE UNIT
9721-0701	CONDUIT, PVC, 2"X10' LONG, DB 120	2C1WELY
9721-0714	CONDUIT, PVC, 2"X10' LONG, SCH 40	-------
9721-0708	CONDUIT, PVC, 3"X10' LONG, DB 60	-------
9721-0704	CONDUIT, PVC, 3½"X10' LONG, SCH 40	-------
9721-0710	CONDUIT, PVC, 4"X10' LONG, EB 35	4C1WMY
9721-0511	PIPE, PVC, 4"X10' LONG, SCH 40, SEWER	4PVC40SPMY

TO BE SUPPLIED WITH AN INTEGRAL BELL OR WITH AN ATTACHED COUPLING ON ONE END
MINIMUM MODULUS 500,000 PSI.
COMPATIBLE UNITS ALSO EXIST FOR DIFFERENT DEPARTMENTS, FUNCTIONS AND CONDUIT CONFIGURATIONS.

H STRIP FOR SPLIT CONDUIT

STOCK NO.	DESCRIPTION
9721-0721	H STRIP FOR 4" CONDUIT, 10' LONG

CONDUIT IS SPLIT BY THE CONDUIT DEPT.

PVC CONDUIT FLEXIBLE

STOCK NO.	DESCRIPTION
9721-0799	CONDUIT, PVC, 1½", FLEXIBLE, 250'/ROLL

DRAWN: DPJ	DVLPED: ___ DATE: _____	REVIEWED:RLH DATE: 11-30-11	APPRVD: JKP DATE: 11-30-11	NEXT REVIEW: 11-14	REV: C

PHI DISTRIBUTION STANDARDS

CONDUIT STOCK LIST

END BELLS

STOCK NO.	DESCRIPTION	COMPATIBLE UNIT
9721-0775	END BELL, PVC, 4", END	4CEBMY
9721-0772	END BELL, PVC, 5", END	5CEBMY
9721-0773	END BELL, PVC, 6", END	6CEBMY

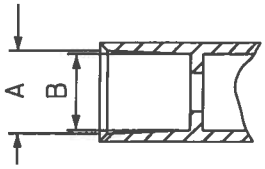

PVC STRAIGHT COUPLINGS

STOCK NO.	DESCRIPTION	A	B	COMPATIBLE UNIT
9721-0715	COUPLING, PVC, 2", STRAIGHT	2.39	2.37	2CCPLLY
9721-0730	COUPLING, PVC, 3", STRAIGHT	3.52	3.49	-------
9721-0723	COUPLING, PVC, 4", STRAIGHT	4.70	4.48	4CCPLMY
9721-0780	COUPLING, PVC, 5", STRAIGHT	5.76	5.54	5CCPLMY
9721-0781	COUPLING, PVC, 6", STRAIGHT	6.78	6.53	6CCPLMY

TO BE USED FOR CONNECTING FIBERGLASS, PVC, AND KORDUCT.
COMPATIBLE UNITS ALSO EXIST FOR DIFFERENT DEPARTMENTS AND FUNCTIONS.

PVC NO STOP COUPLINGS

STOCK NO.	DESCRIPTION
9721-0746	COUPLING, PVC, 4", NO STOP, IPS
9721-0747	COUPLING, PVC, 5", NO STOP, IPS

TO BE USED FOR SPLICING EXISTING CONDUIT

FIBERGLASS COUPLING STRAIGHT

STOCK NO.	DESCRIPTION	COMPATIBLE UNIT
9721-0742	COUPLING, FIBERGLASS, 5" IPS, STRAIGHT	5FCPLMY

TO BE USED FOR BRIDGE CROSSINGS.

FIBERGLASS EXPANSION COUPLING

STOCK NO.	DESCRIPTION	COMPATIBLE UNIT
9721-0741	COUPLING, FIBERGLASS, 5", EXPANSION	5FEJMY

TO BE USED FOR BRIDGE CROSSINGS.

DRAWN: DPJ	DVLPED: ___ DATE: _____	REVIEWED:RLH DATE: 11-30-11	APPRVD: JKP DATE: 11-30-11	NEXT REVIEW: 11-14	REV: C

PHI

DISTRIBUTION STANDARDS

CONDUIT STOCK LIST

TILE ADAPTERS

STOCK NO.	DESCRIPTION	COMPATIBLE UNIT
9721-0702	MULTIPLE TILE, 3½" X 18" LONG, 4-WAY	3SPLITMTDMY

FIBERGLASS BENDS

STOCK NO.	DESCRIPTION	COMPATIBLE UNIT
9721-0877	BEND, FG, 4", 22.5 DEGREE X 144" RADIUS.	4F22X144MY
9721-0878	BEND, FG, 5", 22.5 DEGREE X 144" RADIUS.	5F22X144MY
9721-0736	BEND, FG, 5", 90 DEGREE X 36" RADIUS.	5F90X36MY
9721-0810	BEND, FG, 6", 22.5 DEGREE X 72" RADIUS.	6F22X72MY
9721-0808	BEND, FG, 6", 22.5 DEGREE X 144" RADIUS.	6F22X144MY

TO BE SUPPLIED WITH AN INTEGRAL BELL OR WITH AN ATTACHED COUPLING ON ONE END.

PVC BENDS

STOCK NO.	DESCRIPTION	COMPATIBLE UNIT
9721-0801	BEND, PVC, 2", 45 DEGREE X 18" RADIUS	---------
9721-0812	BEND, PVC, 2", 90 DEGREE X 14" RADIUS	---------
9721-0803	BEND, PVC, 2", 90 DEGREE X 24" RADIUS	2C90X24LY
9721-0847	BEND, PVC, 3", 90 DEGREE X 24" RADIUS	----------
9721-0851	BEND, PVC, 3", 90 DEGREE X 18" RADIUS	----------
9721-0872	BEND, PVC, 4", 11.5 DEGREE X 36" RADIUS	4C11X36MY
9721-0870	BEND, PVC, 4", 22.5 DEGREE X 36" RADIUS	4C22X36MY
9721-0809	BEND, PVC, 4", 30 DEGREE X 48" RADIUS	4C30X48MY
9721-0811	BEND, PVC, 4", 90 DEGREE X 24" RADIUS	4C90X24MY
9721-0869	BENO, PVC, 4", 90 DEGREE X 36" RADIUS	4C90X36MY
9721-0879	BEND, PVC, 5", 90 DEGREE X 24" RADIUS	5C90X24MY
9721-0896	BEND, PVC, 5", 90 DEGREE X 48" RADIUS	5C90X48MY
9721-0894	BEND, PVC, 6", 22.5 DEGREE X 48" RADIUS	6C22X48MY
9721-0860	BEND, PVC, 6", 90 DEGREE X 48" RADIUS	6C90X48MY

TO BE SUPPLIED WITH AN INTEGRAL BELL OR WITH AN ATTACHED COUPLING ON ONE END.
CONPATIBLE UNITS ALSO EXIST FOR DIFFERENT DEPARTMENTS AND FUNCTIONS.

Rev. D: Remove 22.5 degree bend stock # 9721-0890

DRAWN: DPJ DVLPED: ___ DATE: _____	REVIEWED:MRS DATE: 08/15/13	APPRVD: TAA DATE: 08/16/13	NEXT REVIEW: 08-16	REV: D

PHI DISTRIBUTION STANDARDS

CONDUIT STOCK LIST

ADAPTERS

STOCK NO.	DESCRIPTION	COMPATIBLE UNIT
9721-0712	ADAPTER, PVC, 4" IPS TO 4" KORDUCT, INTERNAL	4CCPLKIPSMY

DUCT PLUGS

STOCK NO.	DESCRIPTION
9721-0740	PLUG, PVC, 2", TAPERED
9721-0784	PLUG, PVC, 3", TAPERED
9721-0785	PLUG, PVC, 4", TAPERED
9721-0794	PLUG, PVC, 5", TAPERED
9721-0795	PLUG, PVC, 6", TAPERED

SPACERS

STOCK NO.	DESCRIPTION
9721-0147	SPACER, PLASTIC, 4", BASE
9721-0150	SPACER, PLASTIC, 4", INTERMEDIATE
9721-0148	SPACER, PLASTIC, 5", BASE
9721-0152	SPACER, PLASTIC, 5", INTERMEDIATE
9721-0154	SPACER, PLASTIC, 6", BASE
9721-0155	SPACER, PLASTIC, 6", INTERMEDIATE

0227.1.1

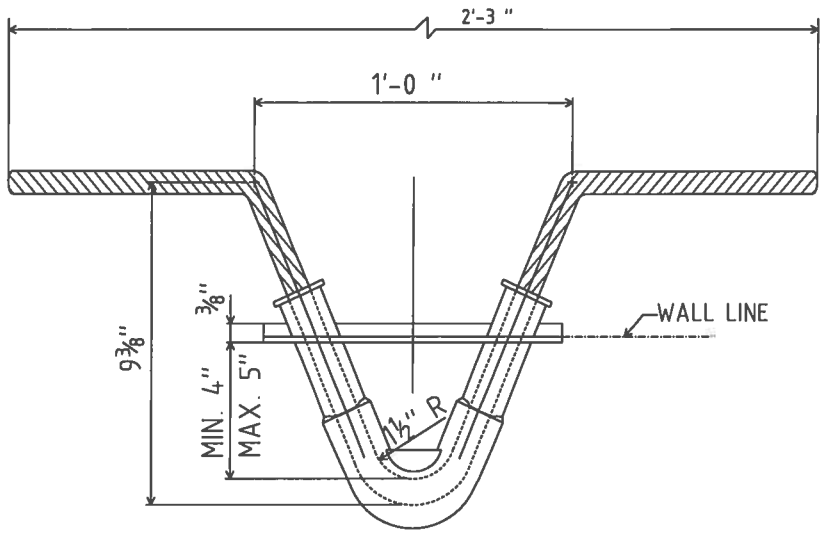

PLAN

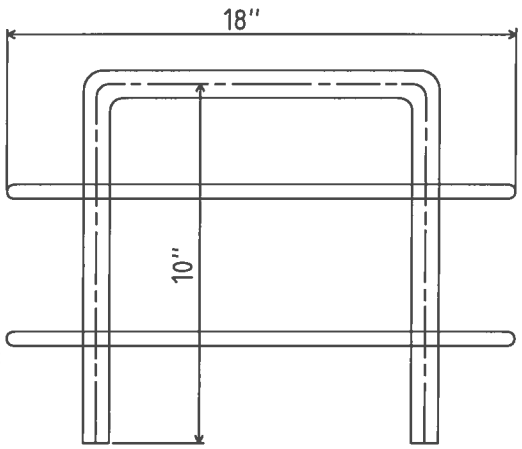

FRONT VIEW

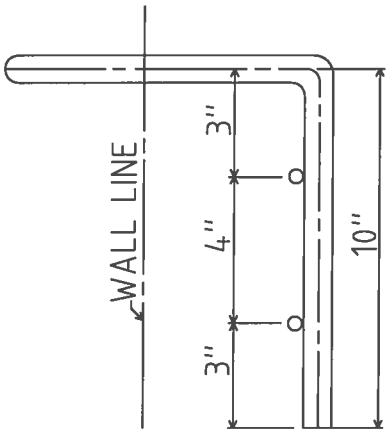

SIDE VIEW

NOTES:

1. FABRICATE FROM #6 DEFORMED REINFORCING STEEL.

2. ALL MATERIAL TO BE GALVANIZED AFTER SHOP WORK & SHALL CONFORM TO A.S.T.M. DESIGNATION 123-33 WITH ANY REVISION THERE OF.

3. STOCK NO. 9712-0718.

4. INSTALL 2 - #4 DEFORMED REINFORCING STEEL BARS 18"L AS SHOWN.

DRAWN: AVI	DVLPED: AF DATE: 07-08-68	REVIEWED: JKP DATE: 8/20/10	APPRVD: MDW DATE: 8/20/10	NEXT REVIEW: 8/13	REV: C

PHI

DISTRIBUTION STANDARDS

CABLE PULLING-IN IRON

2-2-1096.1.1

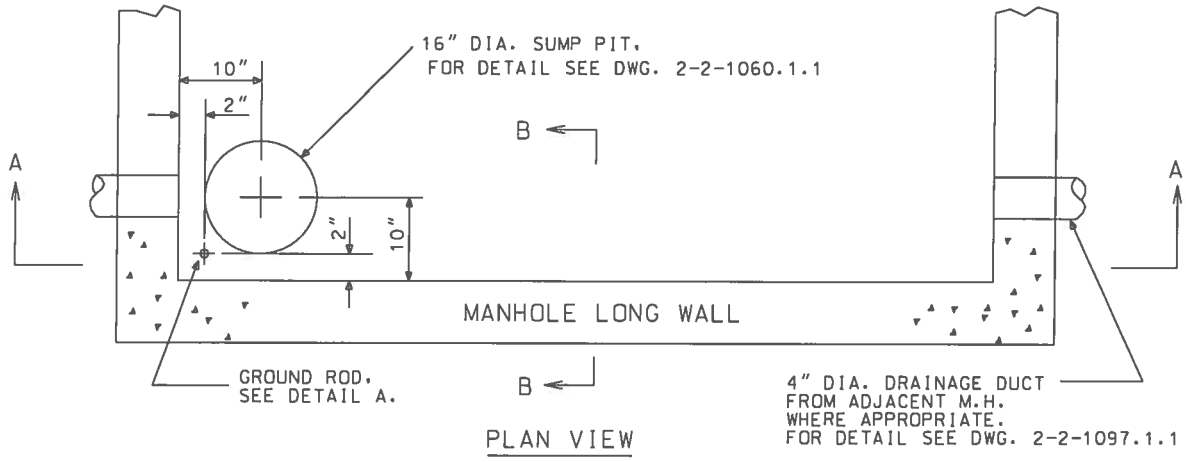

PLAN VIEW

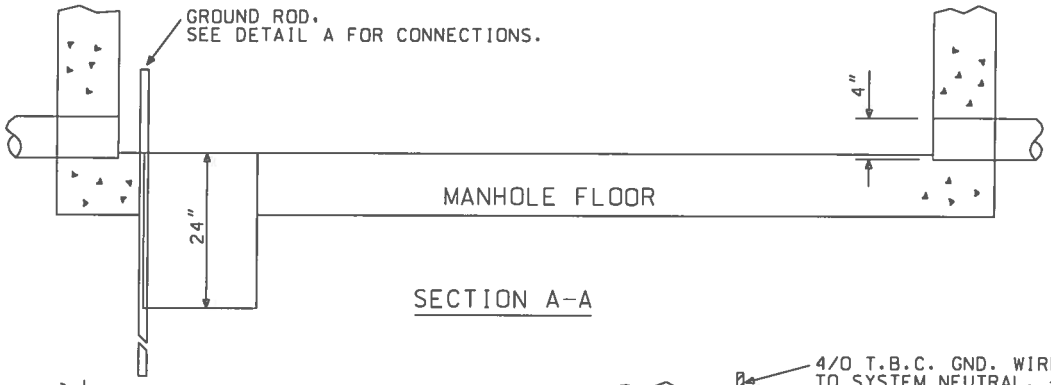

SECTION A-A

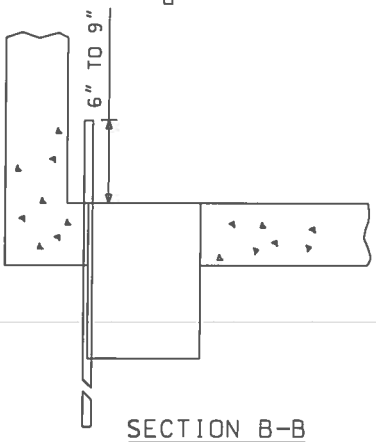

SECTION B-B

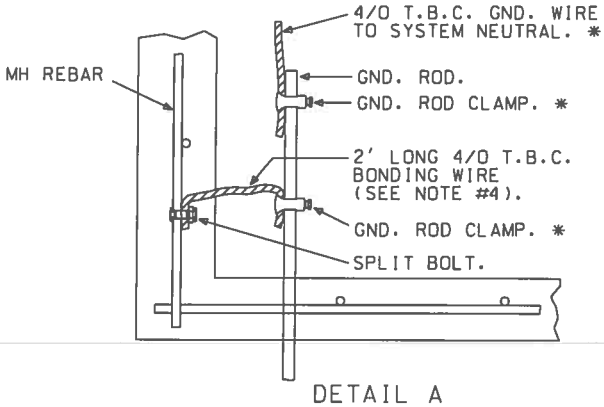

DETAIL A

(SUMP PIT OMITTED FOR CLEARITY)
* TO BE INSTALLED BY UGL.

NOTES:

1. T.B.C. = TINNED BARE COPPER.
2. THE 2' LONG, 4/O T.B.C. REBAR BONDING WIRE CONNECTS TO THE REBAR BY USING A 4/O SPLIT BOLT CONNECTOR (STOCK #9713-1509)
3. CONNECT THE 4/O T.B.C. TO REBAR BEFORE POURING THE MANHOLE
4. CONNECT THE 4/O T.B.C. TO THE GROUND ROD BY A 5/8" GROUND ROD CLAMP (STOCK #9713-0113)
5. IN PRE-CASTED MANHOLE, CONNECT THE 4/O T.B.C. TO THE REBARS IN THE POCKET ON THE WALL NEAR THE SUMP PIT.
6. REFER TO DWG. 2-2-1060.1.1 FOR SUMP PIT CONSTRUCTION.
7. REFER TO DWG. 2-2-1097.1.1 FOR DRAINAGE DUCT BETWEEN MANHOLES.
8. REV. A: CHANGED DWG FORMAT; CHANGED STOCK NO. FOR WMIS.
9. REV. B: REMOVED GUTTER AND CHANGED SIZE OF THE SUMP PIT OPENING AND DRAWING NUMBERS.

DRAWN: RLH	DVLPED: JC DATE: 08/08/91	REVIEWED:RLH DATE: 10/15/08	APPRVD: MDW DATE: 10/15/08	NEXT REVIEW: 10/11	REV: B

PHI PEPCO

POWER DISTRIBUTION STANDARDS

GROUNDING FOR STANDARD MANHOLE

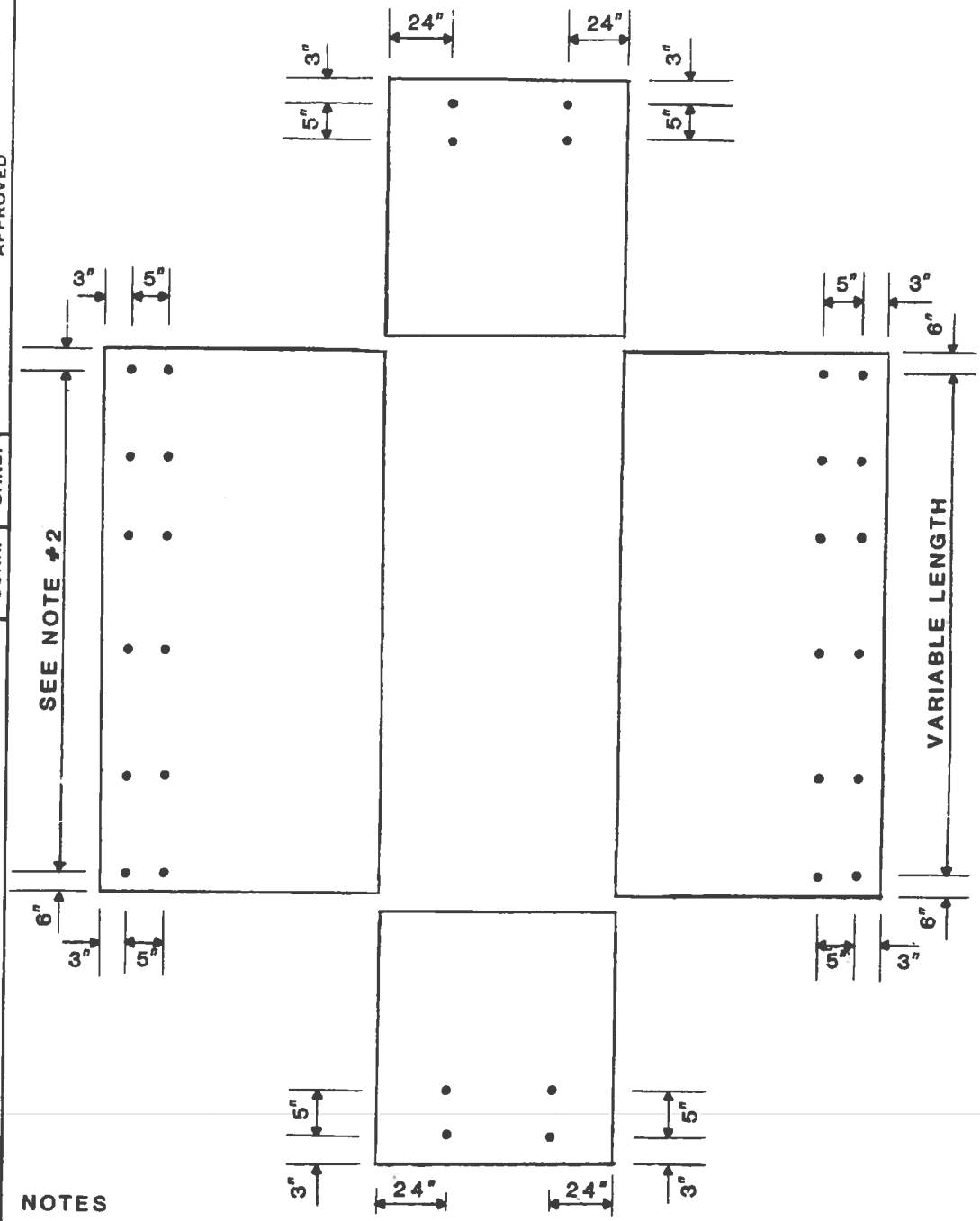

NOTES

1. 1/2"-13THD. X 2" CONC. INSERTS IN ALL WALLS OF MANHOLES WITHOUT ROOFS.
2. SPAN BETWEEN INSERTS NOT TO EXCEED 4 FT.

INSERTS FOR PRECAST MANHOLES
6'X6' - 6'X22'

POTOMAC ELECTRIC POWER CO.
ELECTRICAL ENGINEERING DEPARTMENT
DATE 10/13/86 DWG. NO. 4-2-1224

APPD			
DR BY PLW	CHKD		
SCALE NOT TO SCALE			

REVISIONS | CORR. | CHKD. | APPROVED

GRAPHIC CONTROLS CORP., BROOKLYN, N. Y. 11217 ASTROFILM 675.3M

2-2-1060.1.1

NOTES:

1. REFER TO CUSTOMER ENGINEERING DEFINITIVE DESIGN CE05.12 FOR MANHOLE SUMP PUMP AND SEWER CONNECTIONS.
2. REFER TO DWG. 2-2-1096.1.1 FOR GROUNDING IN MANHOLE.
3. REV. A :REMOVED 1 21/32" HOLES FOR PIPE CONNECTION AND DRAINAGE; CHANGED DWG FORMAT; CHANGED STOCK NO'S PER WMIS.
   REV. B: CHANGED DESCRIPTION AND DESIGN OF THE SUMP PIT COVER.

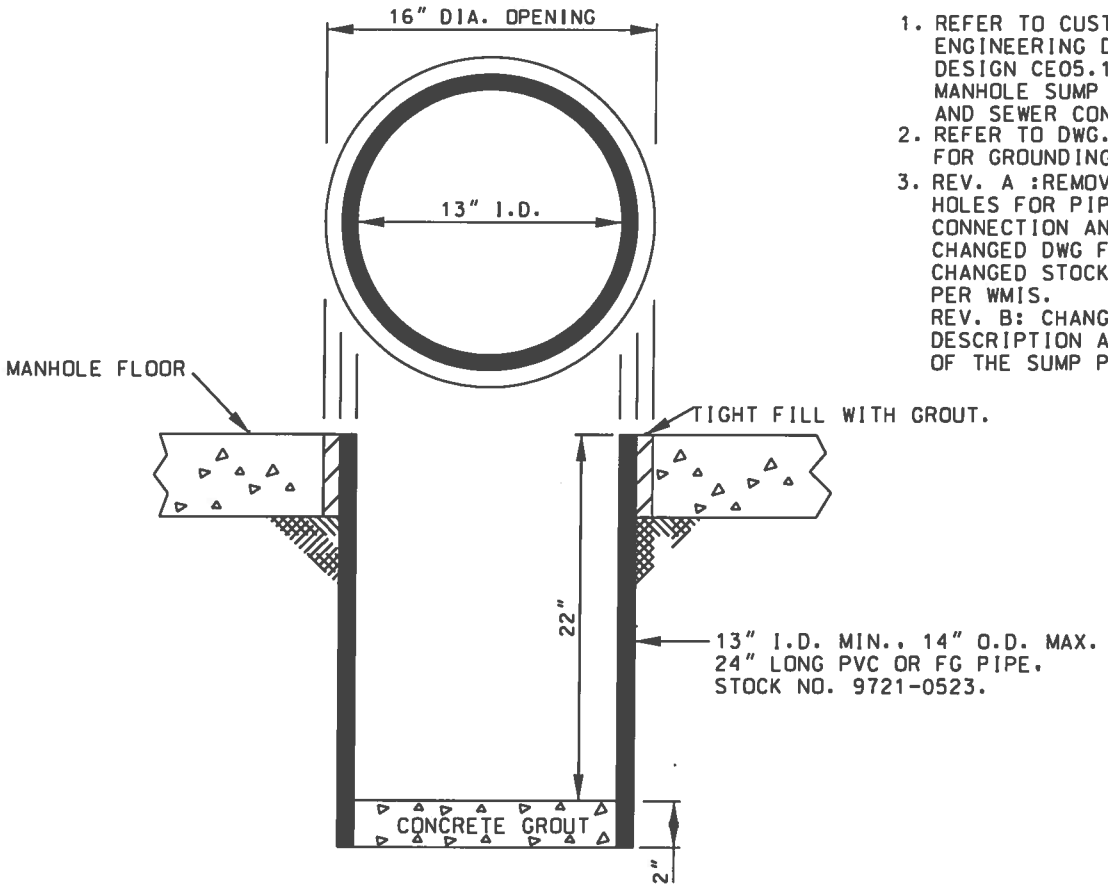

SUMP PIT COVER

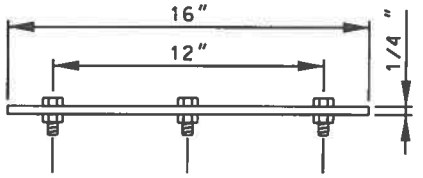

(4) 3/8" X 1 1/2" BOLTS (STOCK NO. 9725-2103) WITH (4) 3/8" NUTS (STOCK NO. 9725-2140).

SECTION A-A

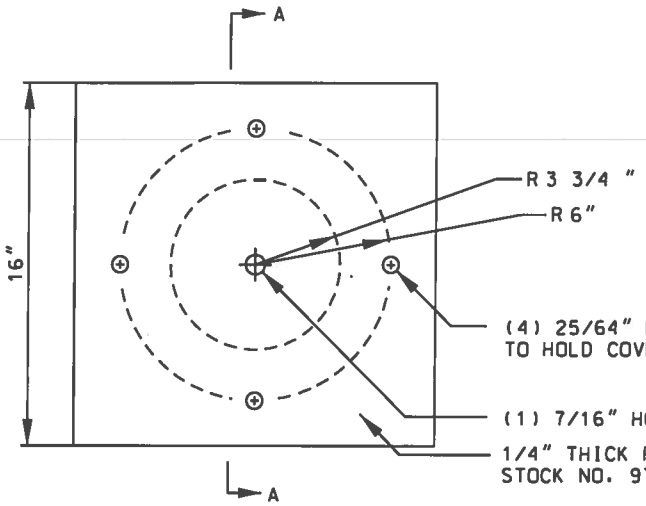

DRAWN: RLH	DVLPED: JC DATE: 09-20-93	REVIEWED:RLH DATE: 10/15/08	APPRVD: MDW DATE: 10-15-08	NEXT REVIEW: 10-11	REV: B

pepco DISTRIBUTION STANDARDS

SUMP PIT FOR STANDARD MANHOLE

...\2-2-1060.1.1.DGN 10/16/2008 9:53:23 AM

THIS DRAWING SUPERSEDES DRAWING 2-2-0730, DATED 6-1-61

CONCRETE REQUIRED FOR MANHOLES-CU. YDS

	SIZE OF MANHOLE												
FLOOR THICKNESS	24"X24"	3'X3'	4'X4'	4.5'X6'	6'X6'	6'X8'	6'X10'	6'X12'	6'X14'	6'X16'	6X18'	6'X20'	6'X22'
4"	0.11	0.2	0.36	0.53	0.65	0.84	1.03	1.14	1.39	1.55	1.73	1.91	2.09
5"	0.14	0.25	0.45	0.66	0.83	1.1	1.29	1.52	1.74	1.97	2.2	2.43	2.66
6"	0.16	0.3	0.54	0.79	1.0	1.3	1.54	1.8	2.08	2.35	2.62	2.89	3.6
7"	0.19	0.35	0.62	0.92	1.2	1.5	1.8	2.1	2.43	2.77	3.1	3.41	3.73
8"	0.22	0.4	0.71	1.06	1.3	1.7	2.06	2.4	2.78	3.15	3.5	3.87	4.24
WALL THICKNESS	6"	6"	8"	8"	8"	8"	8"	8"	8"	8"	8"	8"	8"
WALL HEIGHT													
0'-1"	0.02	0.02	0.04	0.04	0.05	0.06	0.06	0.07	0.09	0.09	0.10	0.11	0.12
0'-2"	0.04	0.04	0.08	0.09	0.10	0.12	0.15	0.15	0.18	0.18	0.20	0.21	0.23
0'-3"	0.05	0.06	0.12	0.13	0.16	0.17	0.22	0.22	0.27	0.27	0.30	0.32	0.35
0'-4"	0.06	0.09	0.15	0.17	0.22	0.23	0.29	0.3	0.36	0.36	0.40	0.43	0.46
0'-5"	0.08	0.11	0.2	0.21	0.27	0.29	0.36	0.37	0.44	0.45	0.49	0.53	0.58
0'-6"	0.09	0.13	0.23	0.26	0.33	0.35	0.43	0.44	0.53	0.54	0.59	0.64	0.69
0'-7"	0.11	0.15	0.27	0.3	0.38	0.4	0.5	0.52	0.62	0.63	0.69	0.75	0.81
0'-8"	0.12	0.17	0.31	0.34	0.44	0.46	0.58	0.60	0.71	0.72	0.79	0.85	0.92
0'-9"	0.14	0.19	0.35	0.38	0.5	0.52	0.65	0.67	0.79	0.81	0.89	0.96	1.04
0'.10"	0.15	0.22	0.39	0.43	0.55	0.58	0.72	0.74	0.88	0.91	0.99	1.07	1.15
0'-11"	0.17	0.24	0.43	0.47	0.6	0.63	0.79	0.81	0.97	0.99	1.0	1.18	1.28
0'-12"	0.19	0.26	0.47	0.51	0.66	0.69	0.86	0.90	1.06	1.08	1.09	1.28	1.38
2'-0"	0.37	0.52	0.93	1.02	1.3	1.4	1.72	1.78	2.11	2.17	2.37	2.57	2.77
3'-0"	0.56	0.78	1.39	1.53	2.0	2.1	2.57	2.67	3.16	3.26	3.56	3.85	4.15
4'-0"	0.74	1.04	1.84	2.04	2.6	2.8	3.43	3.56	4.22	4.35	4.74	5.14	5.53
5'-0"			2.31	2.55	3.3	3.5	4.28	4.44	5.27	5.43	5.93	6.42	6.91
6'-0"			2.77	3.06	4.0	4.1	5.14	5.33	6.33	6.52	7.11	7.70	8.30
6'-6"			2.97	3.31	4.3	4.5	5.5	5.78	6.77	7.06	7.70	8.35	9.00
7'-0"			3.24	3.57	4.6	4.8	6.00	6.22	7.39	7.6	8.3	8.99	9.68
8'-0"			3.68	4.08	5.3	5.5	6.86	7.11	8.44	8.70	9.48	10.27	11.06
9'-0"			4.16	4.59	6.0	6.2	7.71	8.0	9.49	9.78	10.67	11.56	12.44
10'-0"			4.62	5.10	6.6	7	8.56	8.89	10.54	10.86	11.85	12.84	13.38
ROOF THICKNESS			8"	9"	9"	9"	9"						
F&C			0.34	0.7	1.1	1.4	1.8						

NOTES:

1. REV A: CHANGED DRAWING FORMAT.

DRAWN: AIPL	DVLPED: ___ DATE: _____	REVIEWED: TDY DATE: 10/2/08	APPRVD: MDW DATE: 10/9/08	NEXT REVIEW: 11/11	REV: A

pepco DISTRIBUTION STANDARDS

CONCRETE REQUIRED FOR MANHOLES

2-2-0460.1.1

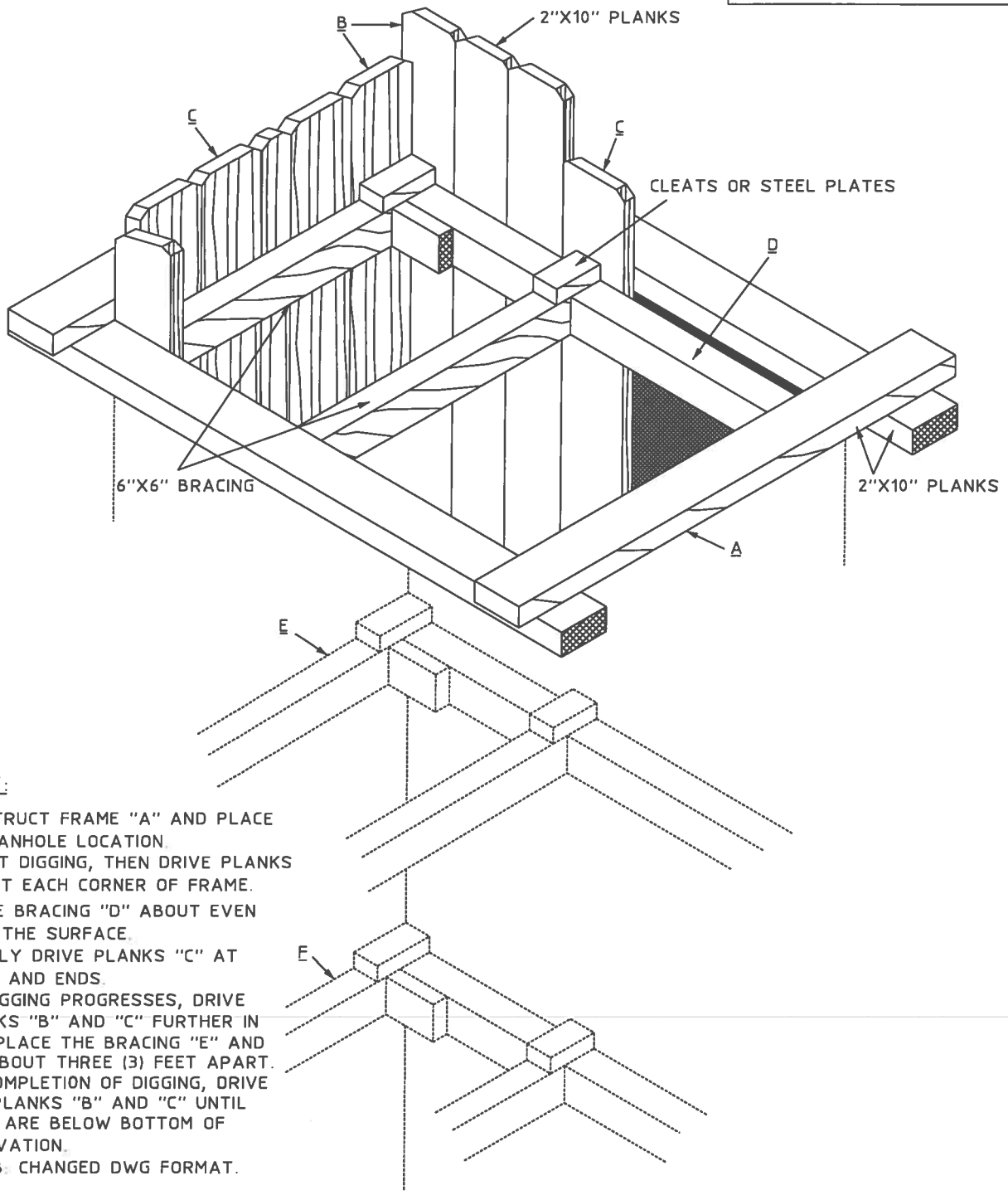

NOTES:

1. CONSTRUCT FRAME "A" AND PLACE AT MANHOLE LOCATION.
2. START DIGGING, THEN DRIVE PLANKS "B" AT EACH CORNER OF FRAME.
3. PLACE BRACING "D" ABOUT EVEN WITH THE SURFACE.
4. PARTLY DRIVE PLANKS "C" AT SIDES AND ENDS.
5. AS DIGGING PROGRESSES, DRIVE PLANKS "B" AND "C" FURTHER IN AND PLACE THE BRACING "E" AND "F" ABOUT THREE (3) FEET APART.
6. AT COMPLETION OF DIGGING, DRIVE ALL PLANKS "B" AND "C" UNTIL THEY ARE BELOW BOTTOM OF EXCAVATION.
7. REV B: CHANGED DWG FORMAT.

REFERENCE

1. PAGE F-1: SCHEDULE OF FABRICATED WALER FRAMING.

DRAWN: AIPL	DVLPED: GPS DATE: 11-15-45	REVIEWED: TDY DATE: 9/30/08	APPRVD: MDW DATE: 10/7/08	NEXT REVIEW: 11/11	REV: B

PHI PEPCO

POWER DISTRIBUTION STANDARDS

METHOD OF SHORING FOR MANHOLE CONSTRUCTION

2-2-0461.1.1

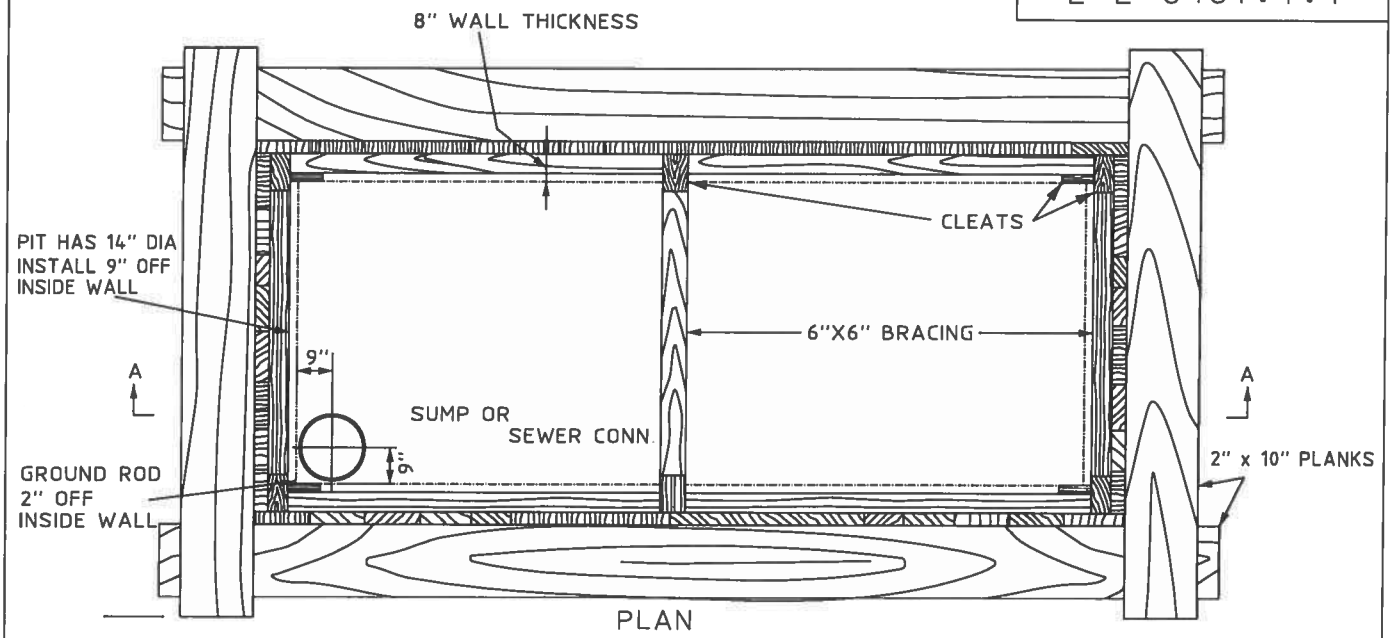

PLAN

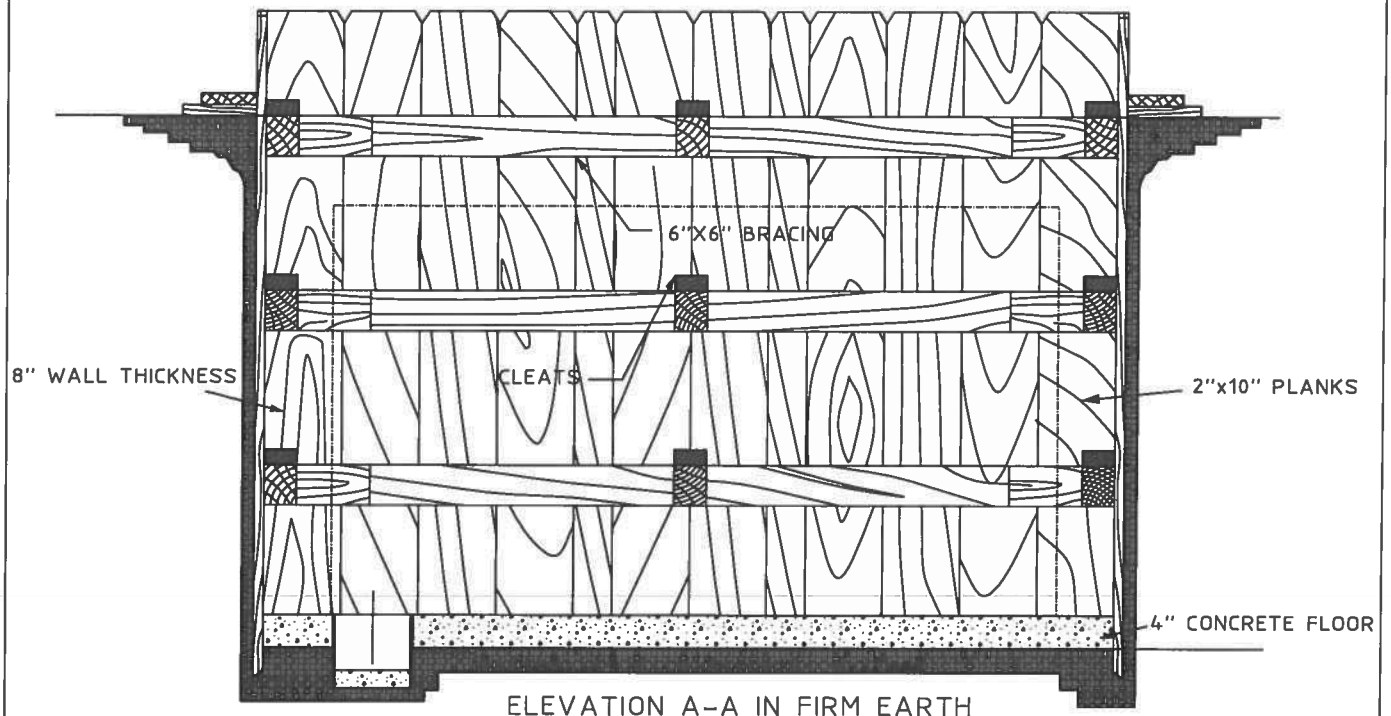

ELEVATION A-A IN FIRM EARTH

ELEVATION A-A IN WET EXCAVATION

NOTES:

1. REV. B: GROUNDING ROD AND SUMP PIT RELOCATION
2. REV A: CHANGED DRAWING FORMAT.

DRAWN: AIPL	DVLPED: JD DATE: 11-29-80	REVIEWED: TDY DATE: 9/30/08	APPRVD: MDW DATE: 10/7/08	NEXT REVIEW: 11/11	REV: B

PHI PEPCO

POWER DISTRIBUTION STANDARDS

METHOD OF INSTALLING MANHOLE FLOOR

0474.1.2

PLAN SHOWING FRAME REMOVED

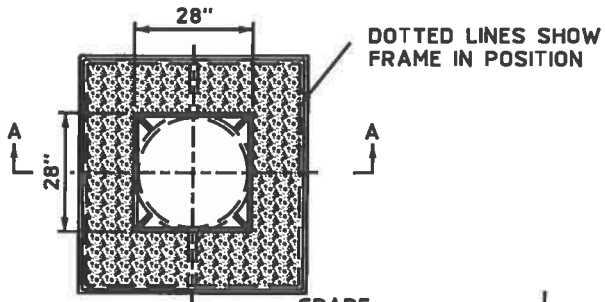

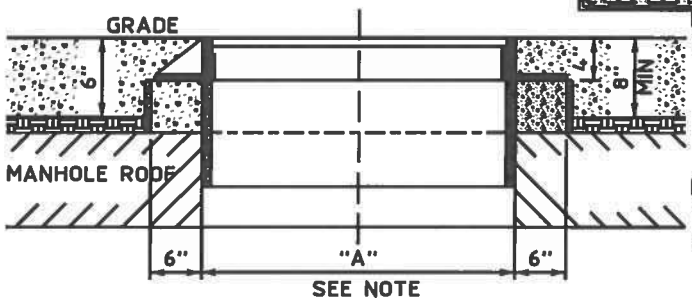

SECTION A-A
SIDEWALK FRAME-LEVEL GRADE

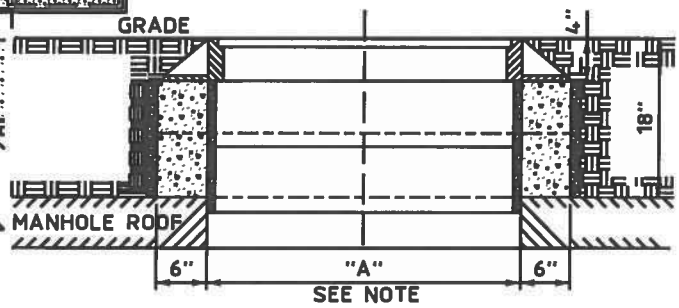

SECTION A-A
SIDEWALK FRAME IN LAWNS

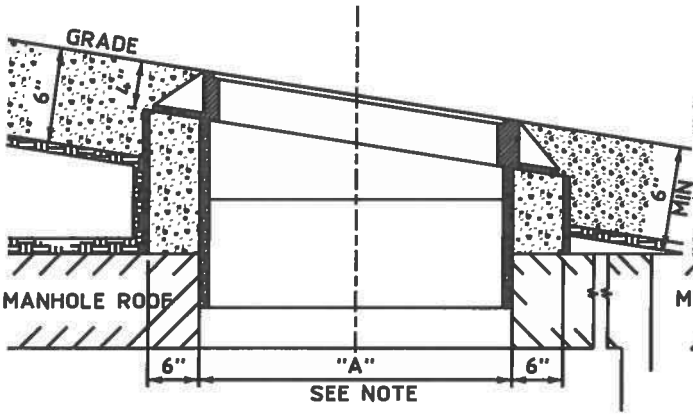

SECTION A-A
SIDEWALK FRAME-INCLINED GRADE

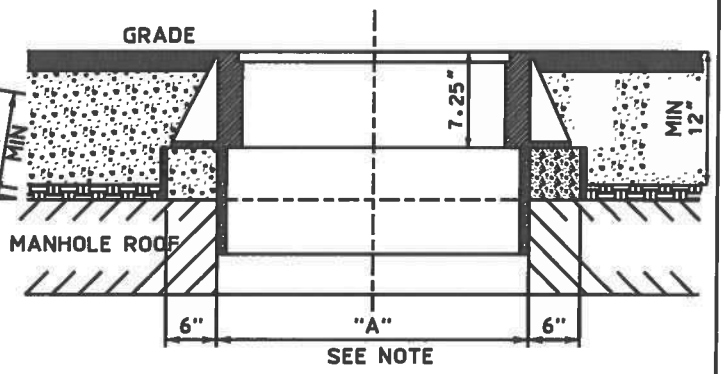

SECTION A-A
ROADWAY FRAME-LEVEL GRADE

NOTES:

1. FOR ROADWAY FRAME IN INCLINED GRADES USE DIMENSIONS SHOWN FOR ROADWAY FRAME, LEVEL GRADES, AND CONSTRUCTION AS SHOWN FOR SIDEWALK FRAME,INCLINED GRADE
2. DIMENSION "A"
   28" FOR SINGLE COVER & FRAME
   40" FOR DOUBLE ACTING COVER & FRAME
3. REMOVE FORMS AFTER SETTING FRAMES AND GRATINGS
4. PAVING OR GRADING OUTSIDE OF HEAVY LINE TO BE FURNISHED BY OTHERS.
5. REV B CHANGED DWG FORMAT
6. VERTICAL DISTANCE FROM MANHOLE CEILING TO FINISHED GRADE IS NOT TO EXCEED 24"
7. CONTRACTORS ARE TO USE 12" OR SMALLER BLADE WHEN SAW CUTTING PAVEMENT

DRAWN: AIPL	DVLPED: JWW DATE: 2/7/52	REVIEWED: RLH DATE: 03/28/14	APPRVD: AAT DATE: 03/28/14	NEXT REVIEW: 03/19	REV: C

PHI PEPCO

POWER DISTRIBUTION STANDARDS

METHOD OF INSTALLING MANHOLE FRAME & COVERS

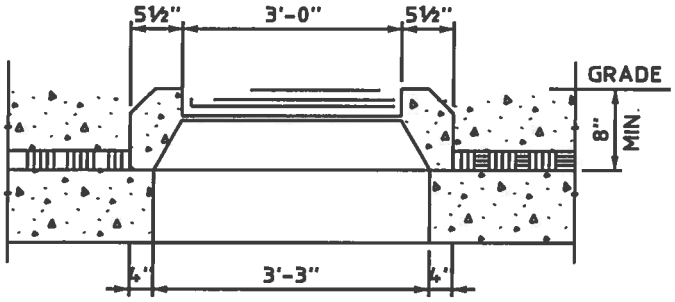

SIDEWALK DOOR GRATING

FOR ST. LT. TRANSF. MANHOLES

SEE DWG.'S No.0279

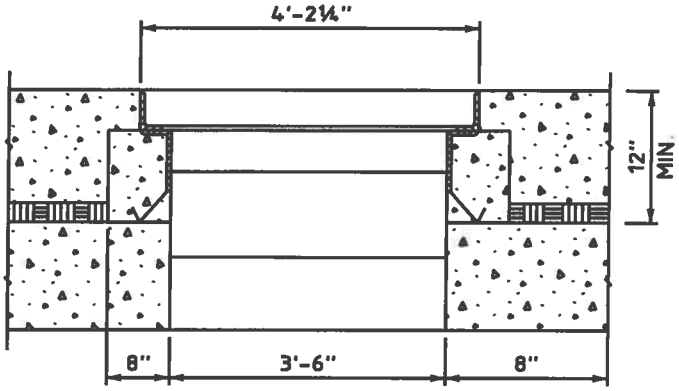

ROADWAY GRATING FRAME

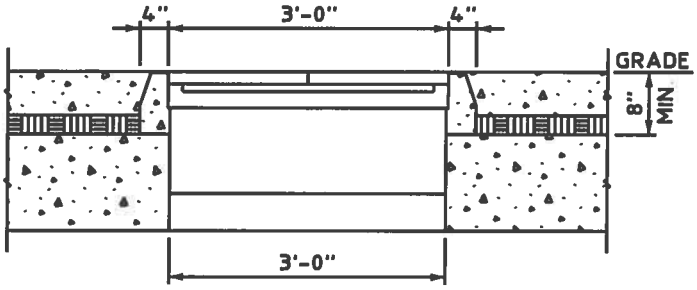

SIDEWALK DOOR GRATING

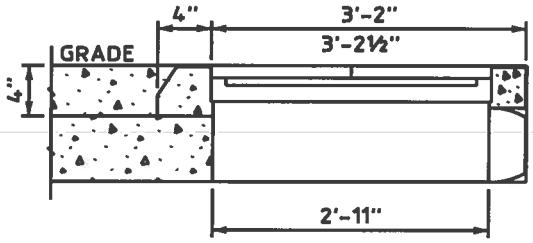

SIDEWALK DOOR GRATING

FOR SIDEWALK NETWORK MANHOLES

NOTES:

1. THIS DWG SUPERSEDES DWG OF SAME NUMBER DATED 10/10/08.
2. REV C: CHANGED DWG FORMAT.

DRAWN: AIPL	DVLPED: JWW DATE: 2/7/52	REVIEWED:RLH DATE: 03/28/14	APPRVD: AAT DATE: 03/28/14	NEXT REVIEW: 03/19	REV: C

PHI PEPCO

POWER DISTRIBUTION STANDARDS

METHOD OF INSTALLING MANHOLE FRAME&COVERS

0733.1.2

NOTES:
1. D: NOMINAL INSIDE DIAMETER

D (IN)	A (IN)	B (IN)	C (IN)	E (IN)	F (IN)	L (IN)	H (IN)
4	5 1/4	6	4 1/4	14 1/2	28 1/2	32	46
5	5 3/4	7	4 3/4	16 1/2	32 1/2	34	50
6	5 1/4	8	5 1/4	18 1/2	36 1/2	36	54

2. ALL DUCT ENTRANCES SHALL BE CONSTRUCT WITH A FULL FLARE AS SHOWN.

3. COMPATIBLE UNIT MHREC8WMY SHALL BE USED WHEN CONSTRUCTION DUCT ENTRANCES 8-WAY AND SMALLER. COMPATIBLE UNIT MHREC9WMY SHALL BE USED WHEN CONSTRUTION DUCT ENTRANCES 9-W AND LARGER.(PEPCO'S CU)

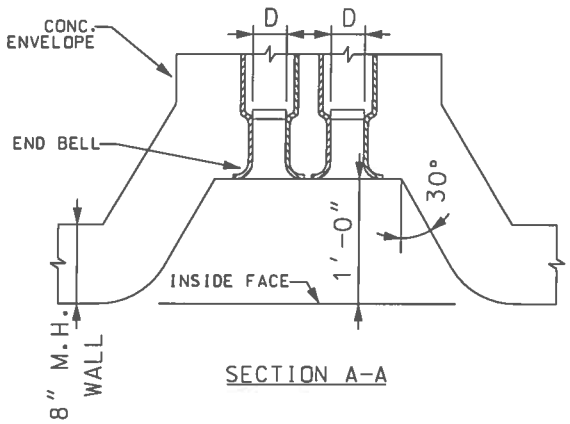

SECTION A-A

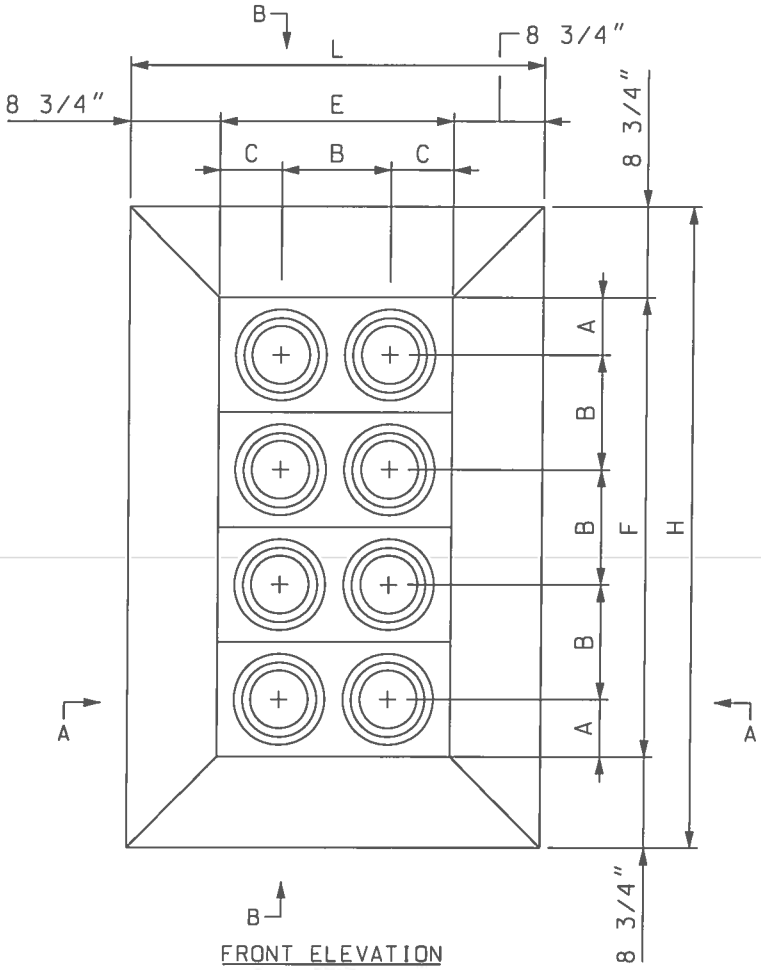

FRONT ELEVATION

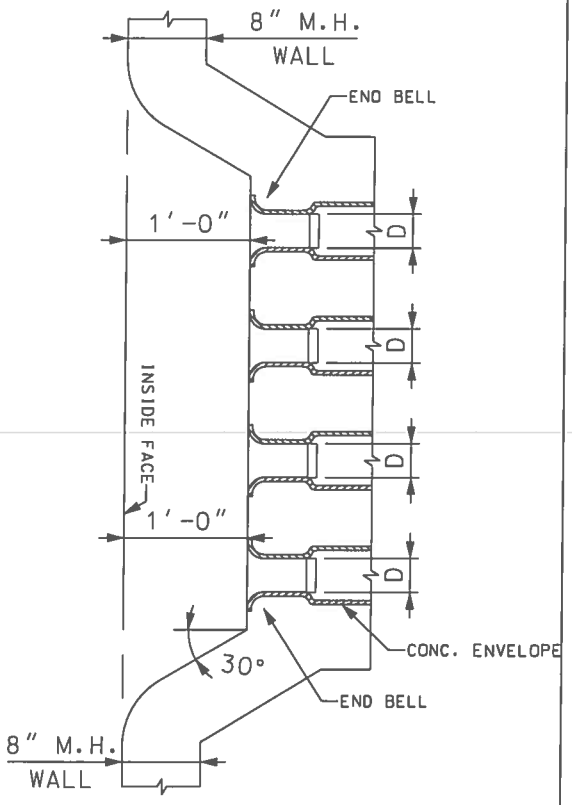

SECTION B-B

DRAWN: DPJ	DVLPED: MDM DATE: 06-31-86	REVIEWED:TDY DATE: 3/23/11	APPRVD: JKP DATE: 3/25/11	NEXT REVIEW: 3/14	REV: B

PHI

DISTRIBUTION STANDARDS

MANHOLE RECESS

0733.2.2

NOTES:
1. D: NOMINAL INSIDE DIAMETER

D (IN)	A (IN)	B (IN)	C (IN)	H (IN)	L (IN)	F (IN)
4	5 1/4	6	4 1/4	34	17 1/4	8 1/4
5	5 3/4	7	4 3/4	36	18 1/4	9 1/4
6	6 1/4	8	5 1/4	38	19 1/4	10 1/2

2. COMPATIBLE UNIT MHREC8WMY SHALL BE USED WHEN CONSTRUCTION DUCT ENTRANCES 8-WAY AND SMALLER. COMPATIBLE UNIT MHREC9WMY SHALL BE USED WHEN CONSTRUCTION DUCT ENTRANCES 9-WAY AND LARGER. (PEPCO'S CU)

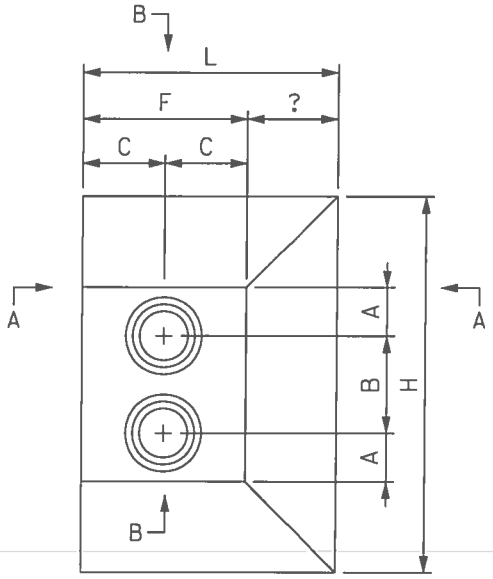

FRONT ELEVATION

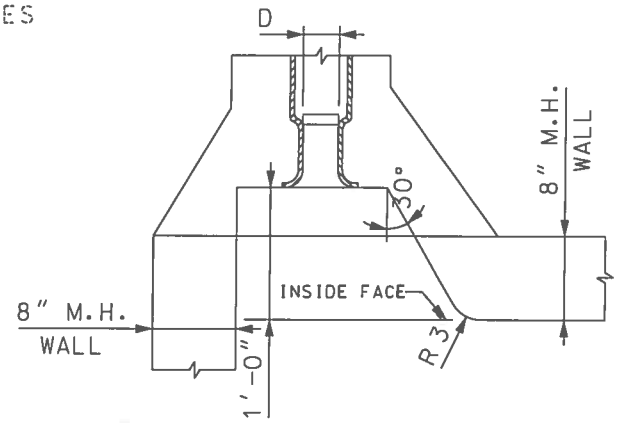

SECTION A-A

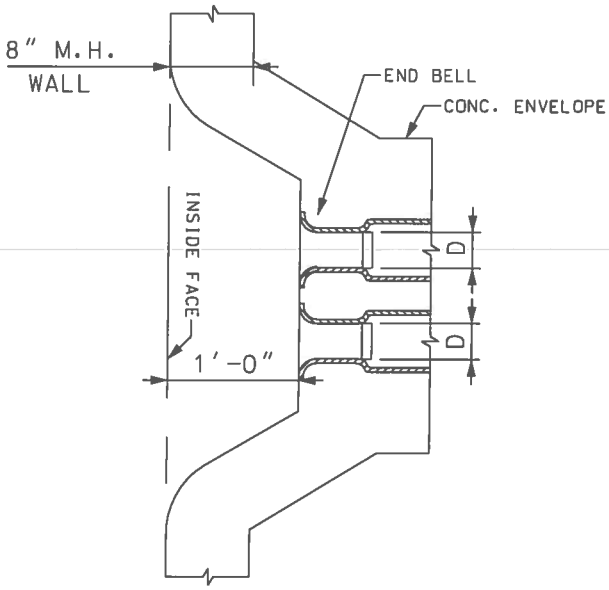

SECTION B-B

DRAWN: DPJ	DVLPED: MDM DATE: 06-31-86	REVIEWED: TDY DATE: 3/23/11	APPRVD: JKP DATE: 3/25/11	NEXT REVIEW: 3/14	REV: B

PHI

DISTRIBUTION STANDARDS

MANHOLE CORNER RECESS

COMPATIBLE UNIT DESIGNATION
MH4506MY

2-2-0709

LOCATION	FLOOR		WALLS																		
STOCK NO.																					
DEPTH = H			6'-6"				7'-0"				8'-0"				9'-0"				10'-0"		
ROD NO.	1	2	3	4	5	6	3	4	5	6	3	4	5	6	3	4	5	6	3	4	5
QUANTITY	5	4	8	8	10	10	8	8	10	10	8	8	12	12	8	8	16	16	8	8	18
SIZE	#3	#3	#4	#4	#4	#4	#4	#4	#4	#4	#4	#4	#4	#4	#4	#4	#4	#4	#4	#4	#4
C/C	18"	18"	18"	18"	18"	18"	15"	18"	18"	18"	18"	18"	18"	18"	18"	18"	15"	15"	18"	18"	15"
LENGTH	5'-6"	7'-0"	6'-9"	6'-9"	5'-6"	7'-0"	7'-3"	7'-3"	5'-6"	7'-0"	8'-3"	8'-3"	5'-6"	7'-0"	9'-3"	9'-3"	5'-6"	7'-0"	10'-3"	10'-3"	5'-6"

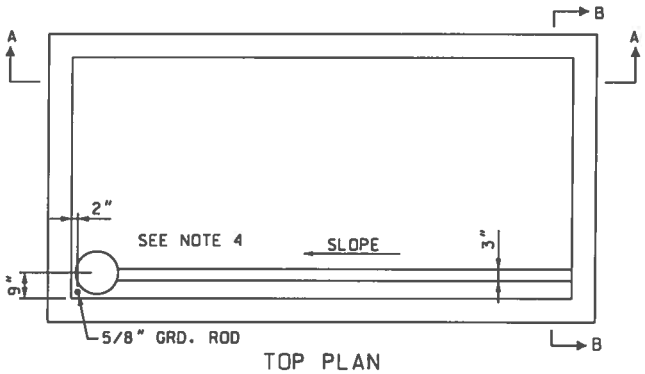

TOP PLAN

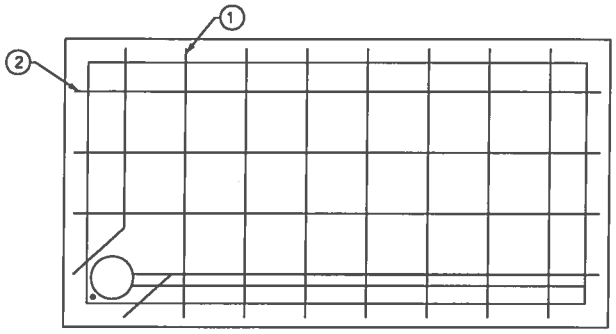

FLOOR PLAN

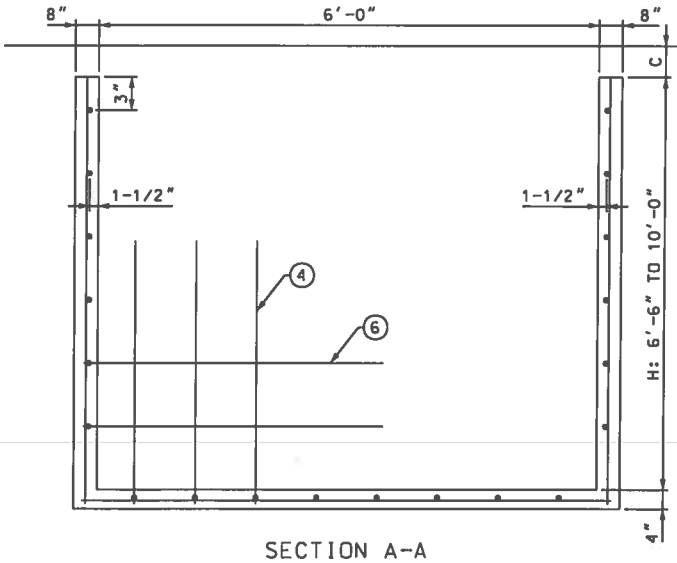

SECTION A-A

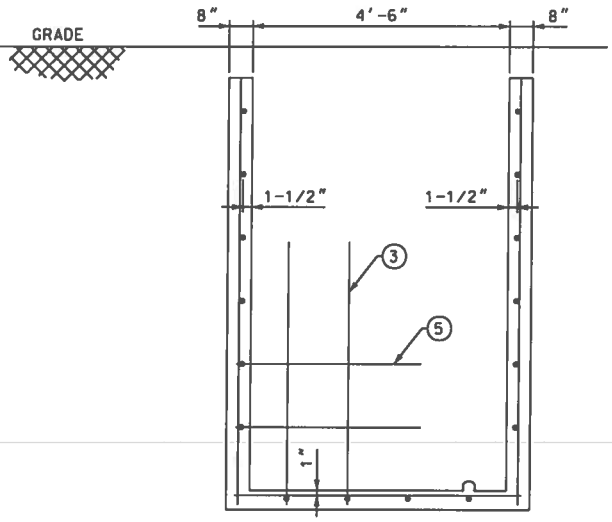

SECTION B-B

NOTES:

C = RDWY. ---------- 21"
= FLUSH SDWK. --------6"
= RECESSED SDWK. --- 18"

2. JOB INSTRUCTIONS WILL DIRECT WHICH ROOF IS TO BE USED.

3. ASSEMBLY STOCK # 9700-2175

4. INSTALL SUMP PUMP PIT, GROUND ROD, AND GUTTER IN MANHOLE PER DWG'S 4-2-1060 AND 4-2-1096. FOR TRANSFORMER MANHOLES, INSTALL SUMP PUMP ON L.V. END.

5. THIS DWG SUPERSEDES DWG 2-2-D685 & 0686. DATED 9-4-59

6. REV A: CHANGED DWG FORMAT; CHANGED STOCK NO'S PER WMIS.

CONCRETE SCHDULE	
FLOOR	13 CU. FT.
WALLS	16 CU. FT. PER VERT FT.

DRAWN: LKD	DVLPED: CEG DATE: 1/13/78	REVIEWED: TDY DATE: 10/2/08	APPRVD: MDW DATE: 10/9/08	NEXT REVIEW: 11/11	REV: A

pepco DISTRIBUTION STANDARDS

4'-6" x 6'-0" ROADWAY MANHOLE

2-2-0718.1.2

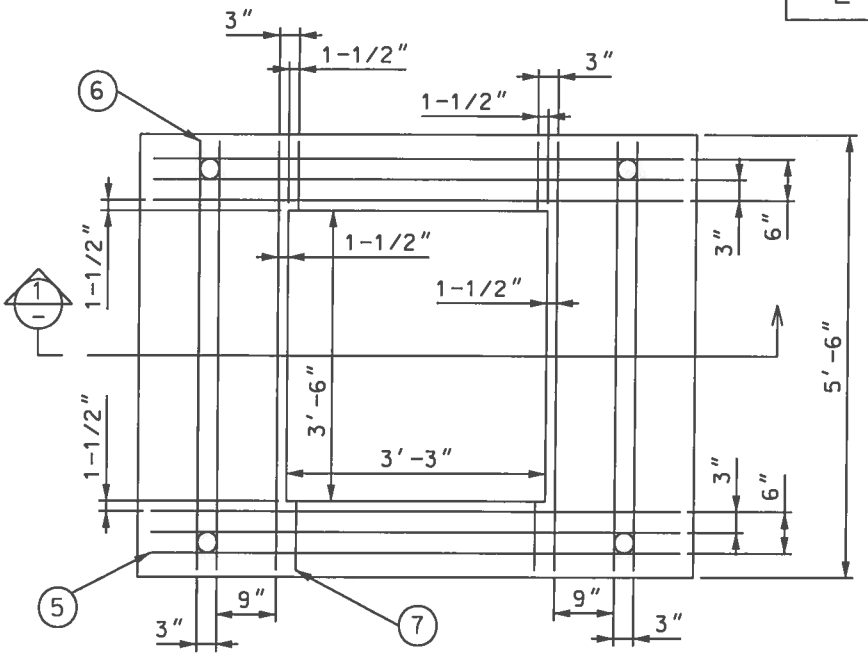

PLAN OF THE TOP REINFORCING

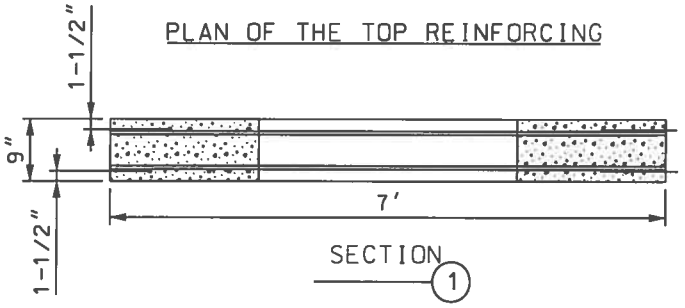

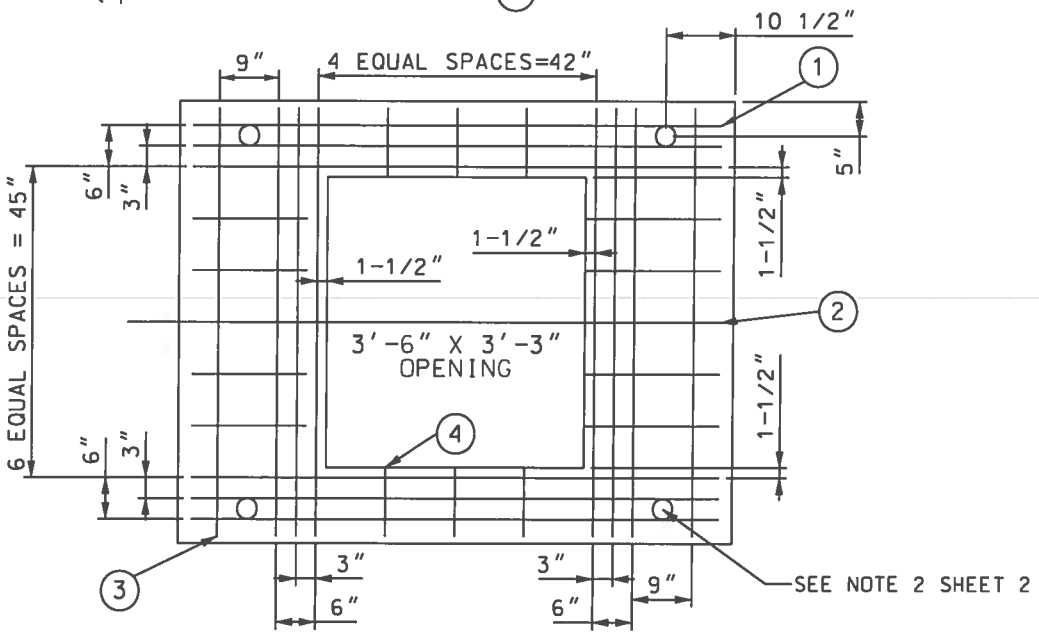

PLAN OF THE BOTTOM REINFORCING

DRAWN: DPJ	DVLPED: CPO DATE: 04-79	REVIEWED: TWM DATE: 10-15-08	APPRVD: MDW DATE: 10-29-08	NEXT REVIEW: 10-11	REV: A

PHI PEPCO

POWER DISTRIBUTION STANDARDS

PRECAST ROADWAY ROOF FOR 4'-6" x 6'-0" MANHOLE

ROD NO	1	2	3	4	5	6	7
QUANTITY	6	10	8	6	6	6	4
SIZE	#6	#6	#4	#4	#3	#3	#3
LENGTH	6'-8"	1'-6"	5'-2"	10"	6'-8"	5'-2"	10"

PRECAST ROADWAY ROOF NOTES:

1: TOTAL WEIGHT 2818LBS.

2: TOTAL CONCRETE 0.70 CU.YD.

3: INSTALL SUPERIOR SINGLE PICK UP (INSERT TYPE 1, 4 REQUIRED PER SLAB)

4: CONCRETE MIX 6 BAG MIX 3500PSI AT 28 DAYS.

5: STOCK NUMBER 9721-0563 SHALL APPEAR ON THE CASTING.

6: ROOF TO BE INSTALLED WITH 12" MINIMUM COVER.

7: THE REBAR SHALL BE EPOXY LOATED AND INSTALLED AS SHOWN.

COMPATIBLE UNIT FOR PRECAST ROADWAY ROOF 4'-6" x 6'-0" MANHOLE

QUANTITY	STOCK #	DESCRIPTION	
55'	P000-0026	REBAR SIZE #6	
47'	P000-0024	REBAR SIZE #4	
75'	P000-0023	REBAR SIZE #3	
0.70	P000-0016	CONCRETE READY MIX	CU. YD.
4	9725-0818	SINGLE PICK UP INSERT CONCRETE TYPE 1	EA

DESIGNATION	DESCRIPTION	STOCK NO.
MHRR4506RMY	MH ROOF CONC 4.5X6 RDWY ML CO	9721-0563

NOTES

REV A: CHANGED DWG FORMAT. CHANGED STOCK NO'S PER WMIS.

DRAWN: DPJ	DVLPED: CPD DATE: 04-79	REVIEWED: TWM DATE: 10-15-08	APPRVD: MDW DATE: 10-29-08	NEXT REVIEW: 10-11	REV: A

PHI PEPCO

POWER DISTRIBUTION STANDARDS

PRECAST ROADWAY ROOF FOR 4'-6" x 6'-0" MANHOLE

2-2-1146.1.2

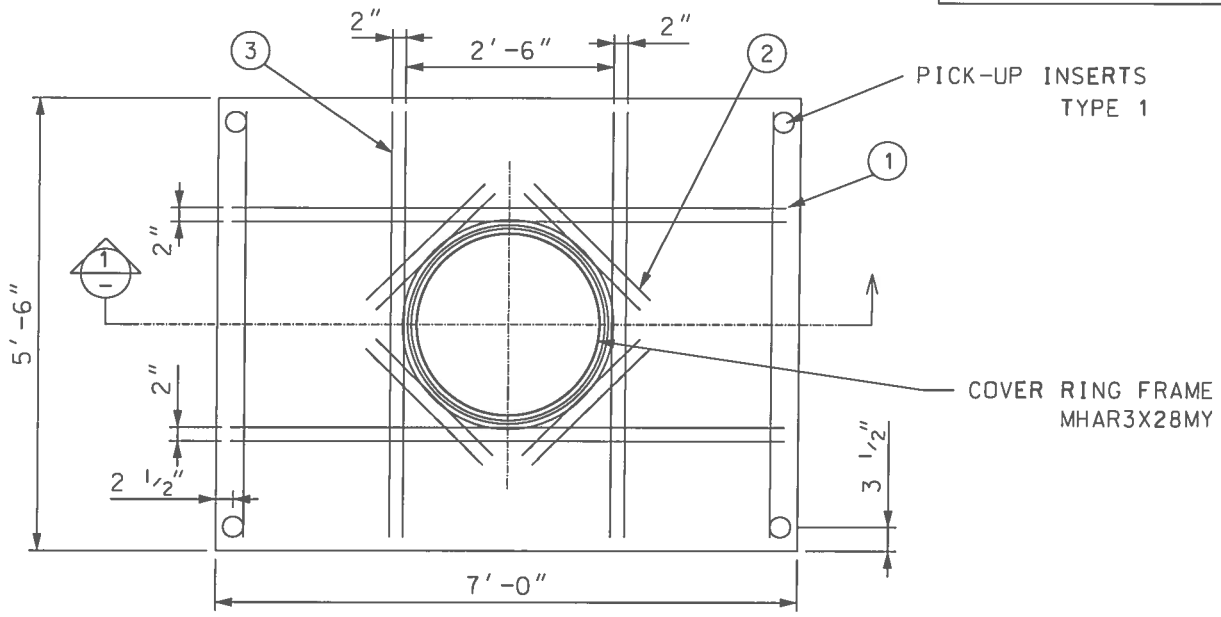

PLAN OF TOP REINFORCING

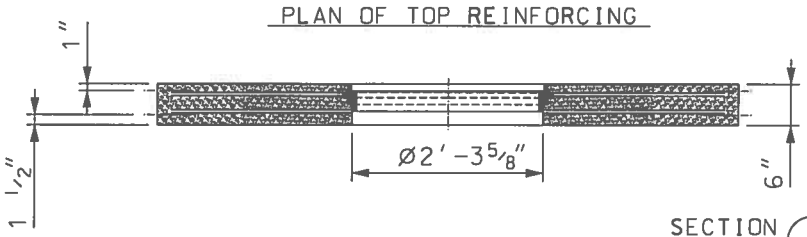

SECTION 1/1

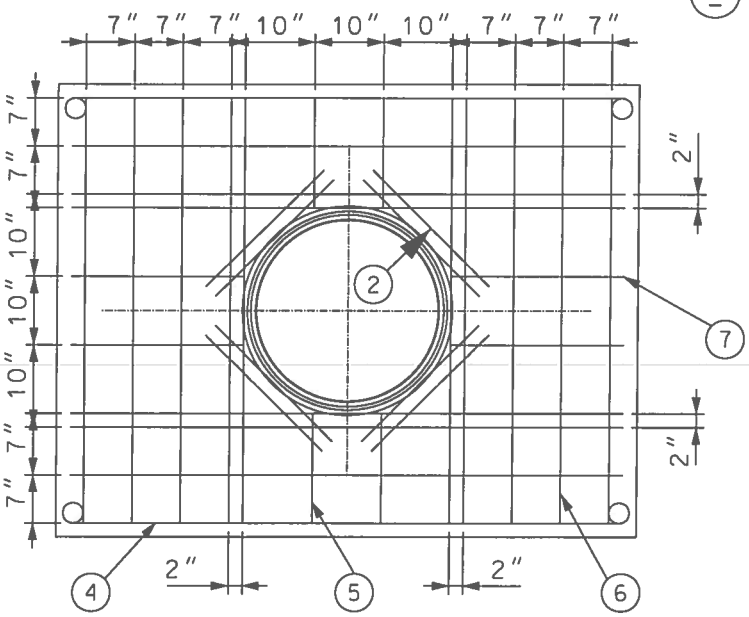

PLAN OF BOTTOM REINFORCING

NOTES:
1. SEE PAGE 2

DRAWN: DPJ	DVLPED: ___ DATE: _____	REVIEWED: TWM DATE: 10-15-08	APPRVD: MDW DATE: 10-29-08	NEXT REVIEW: 10-11	REV: B

PHI PEPCO

POWER DISTRIBUTION STANDARDS

PRECAST SIDEWALK ROOF FLUSH TYPE

ROD NO	1	2	3	4	5	6	7
QUANTITY	4	16	6	8	4	10	4
SIZE	#3	#3	#3	#4	#4	#4	#4
LENGTH	6'-8"	2'-0"	5'-2"	6'-8"	1'-4"	5'-2"	2'-1"

SIDEWALK SLAB NOTES:

1: THE REBAR SHALL BE EPOXY LOATED AND INSTALLED INTO THE FRAME AS SHOWN.
2: CONCRETE SHALL THEN BE TROWL FINISHED FLUSH WITH THE TOP EDGE FRAME.
3: SDWK SLAB WEIGHT = 2018 LBS
4: 12.78 CU.F.T OF 3500PSI CONCRETE AT 28 DAYS. (6 BAGS MIX)
5: THE MANHOLE COVER FRAME SHALL BE SET CENTER OF THE FRAME AS SHOWN.

ENGINEERING ASSEMBLY FOR 4'-6" x 6'-0" SIDEWALK ROOF SLAB WITH 28" ROUND COVER OPENING

QUANTITY	DESIGNATION	DESCRIPTION	REF. DWG
1	MHAR3X28MY	MH CVR ADJ RING FRAME SIDEWALK	2-2-0428
	DESIGNATION	DESCRIPTION	STOCK #
MHR4506SMY		MH RF 4.5' x 6' FLUSH SDWK ML CO	9721-0227

COMPATIBLE UNIT FOR 4'-6" x 6' SIDEWALK ROOF SLAB WITH 28" ROUND COVER OPENING

QUANTITY	ITEM	STOCK #	DESCRIPTION	IU
118'-8"		9700-0024	REBAR SIZE #4	
89'-8"		9700-0023	REBAR SIZE #3	
4		XXXX-XXXX	SINGLE PICK UP INSERT CONCRETE TYPE 1	EA
1		9721-0607	RING 28" MH COVER RING FRAME SDEWALK	EA
			DESCRIPTION	STOCK #
MHR4506SMY			MH RF 4.5 x4' FLUSH SDWK ML CO	9721-0227

DRAWN: DPJ	DVLPED: ___ DATE: _____	REVIEWED: TWM DATE: 10-15-08	APPRVD: MDW DATE: 10-29-08	NEXT REVIEW: 10-11	REV: B

PHI PEPCO

POWER DISTRIBUTION STANDARDS

PRECAST SIDEWALK ROOF FLUSH TYPE FOR 4'-6" X 6"

NOTES:
1. To be manufactured per PEPCO DWG #4-2-119
2. 5,000 psi Concrete at 28 days.
3. Reinforcing - ASTM 615 Grade 60.
4. No concrete in grounding hole or areas around pulling irons.
5. Thickness:
   Walls - 6"
   Floor - 6"
6. Weight: 12,120 lbs.

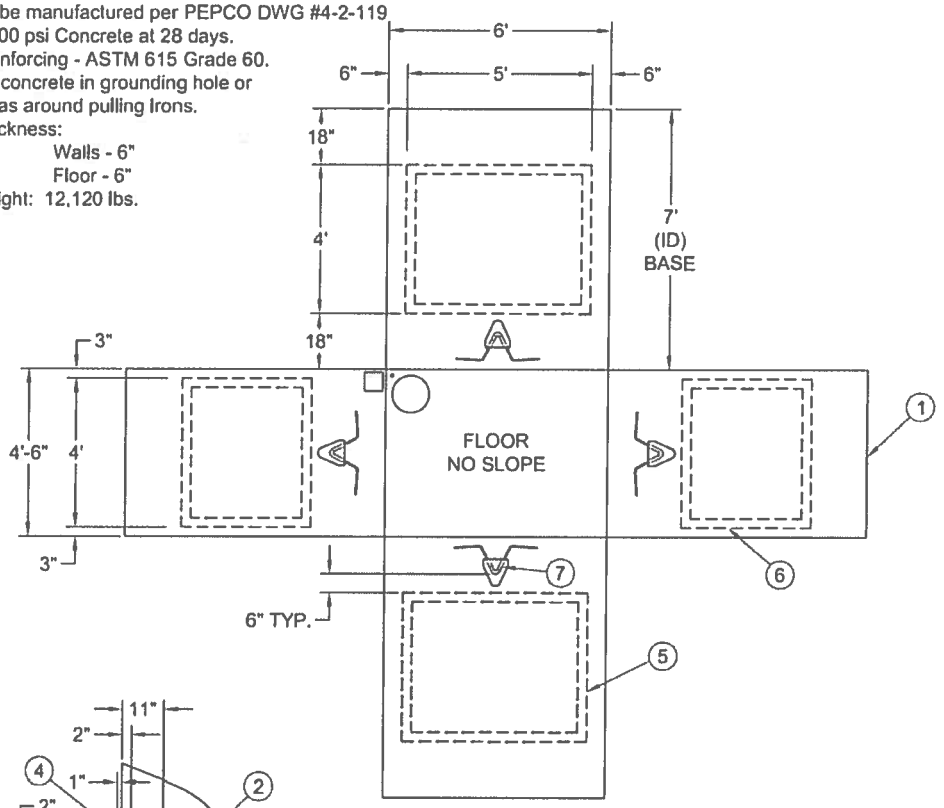

INTERIOR FOLD OUT VIEW
WALLS FOLD UP

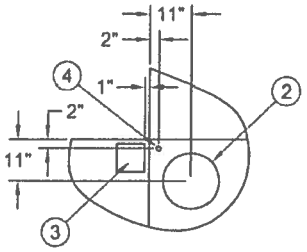

SUMP DETAIL - FLOOR

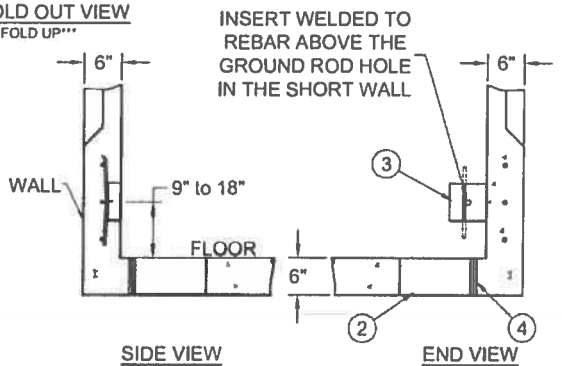

SIDE VIEW
END VIEW
END WALL DETAIL

LEGEND:
1. FLAT JOINT ON TOP.
2. 16" Ø SUMP HOLE THRU FLOOR.
3. 6" x 6" x 2" RECESS w/GROUNDING INSERT.
4. 1" Ø HOLE THRU FLOOR FOR GROUNDING ROD.
5. (2) 48"H x 60"W x 3" T KNOCKOUT PANELS ON LONG WALL.
6. (2) 48"H x 48"W x 3" T KNOCKOUT PANELS ON SHORT WALL.
7. (4) PA INSERT MOLDED PULLING IRON IN WALLS FOR LIFTING AND PULLING.

NPCA CERTIFIED PLANT

GILLESPIE PRECAST LLC
1-800-638-6884
www.gillespieprecast.com

4'-6" x 6'-0" Precast Manhole

DRAWN BY: JHP	DWG.: 1 of 1
SCALE: 1/4" = 1'-0"	DATE: 4/19/07

2-2-0428.1.2

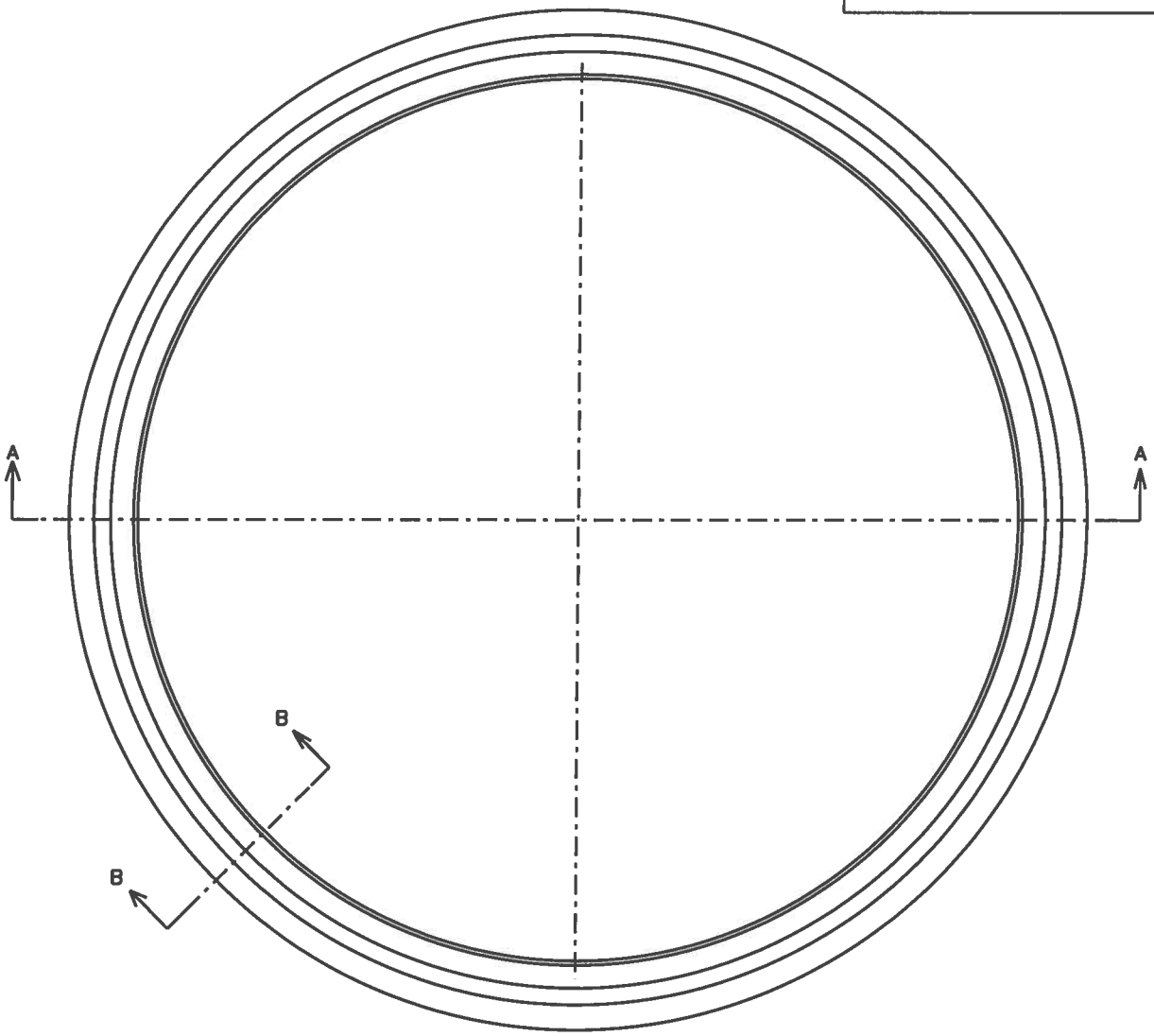

PLAN VIEW

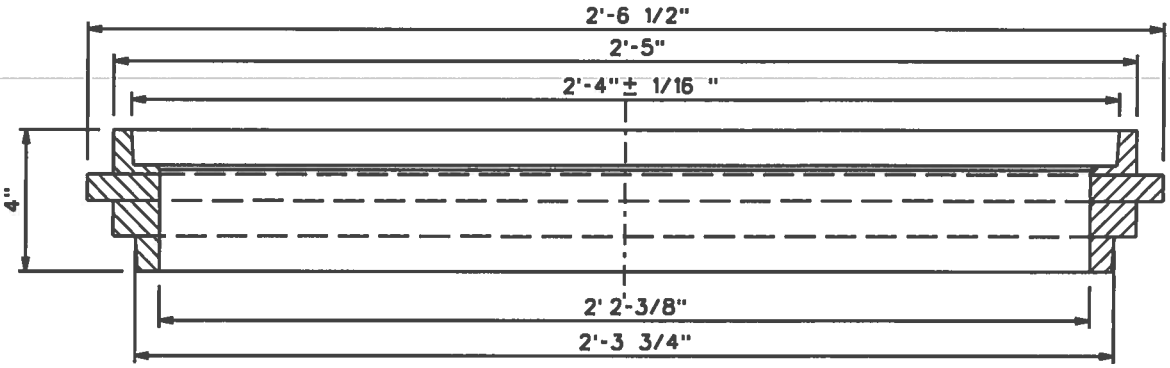

SECTION A - A

NOTES: SEE PAGE 2

DRAWN: AVI	DVLPED: JR DATE: 04-11-02	REVIEWED: TWM DATE: 9/14/04	APPRVD: MDW DATE: 02-21-08	NEXT REVIEW: 02-11	REV: E

PHI PEPCO

POWER DISTRIBUTION STANDARDS

28" MANHOLE COVER RING FRAME SIDEWALK TYPE

...\DGN\2-2-0428_1-2.dgn 4/3/2008 11:16:09 AM

2-2-0428.2.2

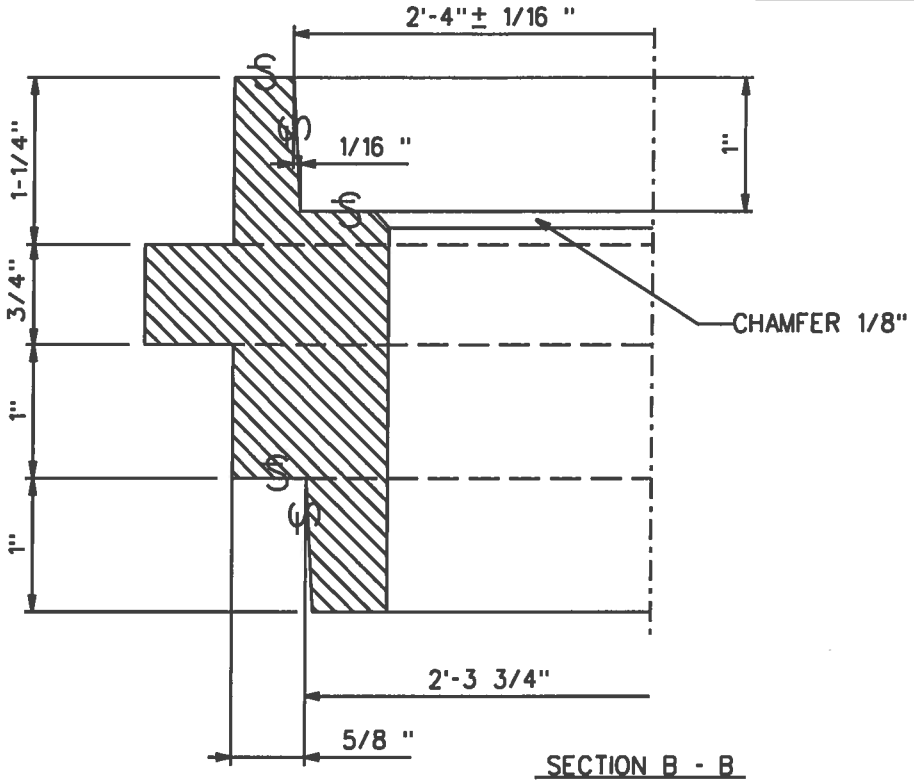

NOTES

1: ALL CASTING SHALL CONFORM TO STANDARD SPECIFICATIONS FOR GRAY IRON CASTINGS A.S.T.M. DESIGNATION A-48 CLASS 35 LATEST REVISIONS.
2: STOCK NO. 9721-0607 SHALL APPEAR ON THE CASTING. APPROXIMATE WEIGHT 100LBS.
3: S MACHINE FINISHED.
4: EACH CASTING SHALL BE IDENTIFIED WITH THE MANUFACTURER'S NAME OR LOGO
5: CASTINGS SHALL BE FREE FROM SAND OR BLOW HOLES AND SHARP EDGES.
6: WITH EXCEPTION ONLY TO ANY NOTED TOLERANCES, NO DIMENSION SHALL EXCEED ± 1/16" / FT.
7: SEE DWG. 2-2-0429 FOR 28" M.H.COVER 1 1/2" EXTENTION RING.
8: SEE DWG. 2-2-0430 FOR 28" M.H.COVER 2" EXTENTION RING.
9: SEE DWG. 2-2-0431 FOR 28" M.H.COVER.
10: REV D: CHANGE DWG FORMAT AND CHANGE STOCK No's FOR WMIS
11: REV E: CHANGE DWG FORMAT.

COMPATIBLE UNIT 28" MANHOLE COVER RING FRAME SIDEWALK TYPE

QTY	STOCK•	DESCRIPTION	
1	9721-0607	RING 28" MH COVER RING FRAME SIDEWALK	EA
	DESIGNATION	DESCRIPTION	
	MHAR3X28MY	MH CVR ADJ RING 28"X3" ML CO	

DRAWN: AVI	DVLPED: JR	DATE: 04-11-02	REVIEWED: TWM DATE: 9/14/04	APPRVD: MDW DATE: 02-21-08	NEXT REVIEW 02-11	REV: E

PHI PEPCO

POWER DISTRIBUTION STANDARDS

28" MANHOLE COVER RING FRAME SIDEWALK TYPE

...\DGN\2-2-0428_2-2.dgn 4/3/2008 11:39:03 AM

2-2-0429.1.2

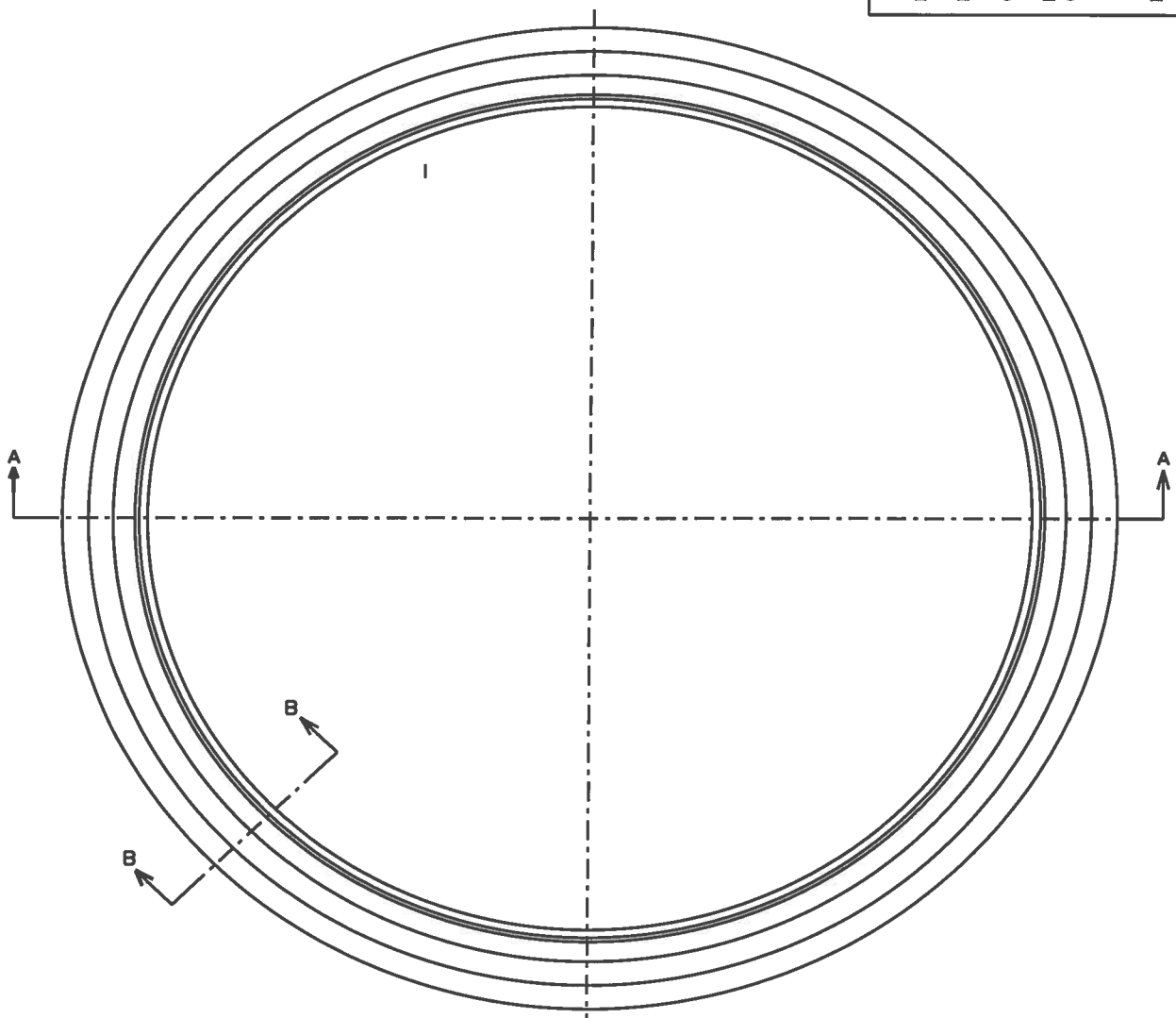

PLAN VIEW

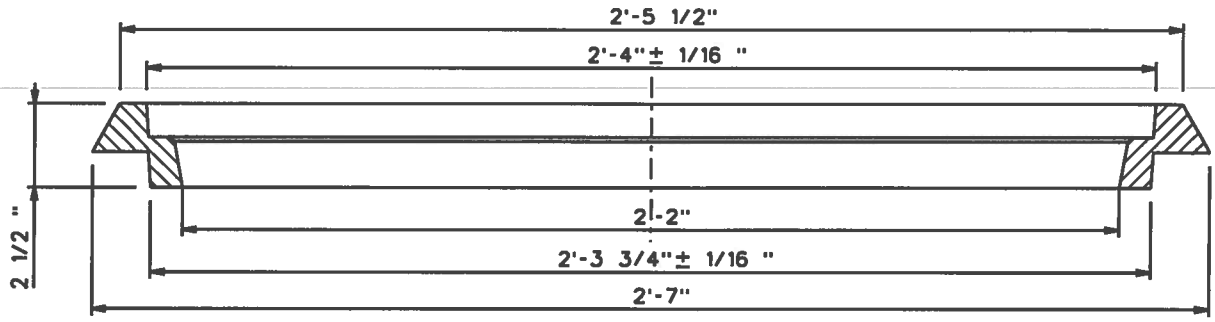

SECTION A - A

NOTES: SEE PAGE 2

DRAWN: AVI	DVLPED: JR DATE: 04-11-02	REVIEWED: TWM DATE: 9/14/04	APPRVD: MDW DATE: 02-21-08	NEXT REVIEW: 02-11	REV: E

PHI PEPCO

POWER DISTRIBUTION STANDARDS

28" MANHOLE 1-1/2" ADJUSTING RING FRAME

...\DGN\2-2-0429_1-2.dgn 4/3/2008 1:02:20 PM

2-2-0429.2.2

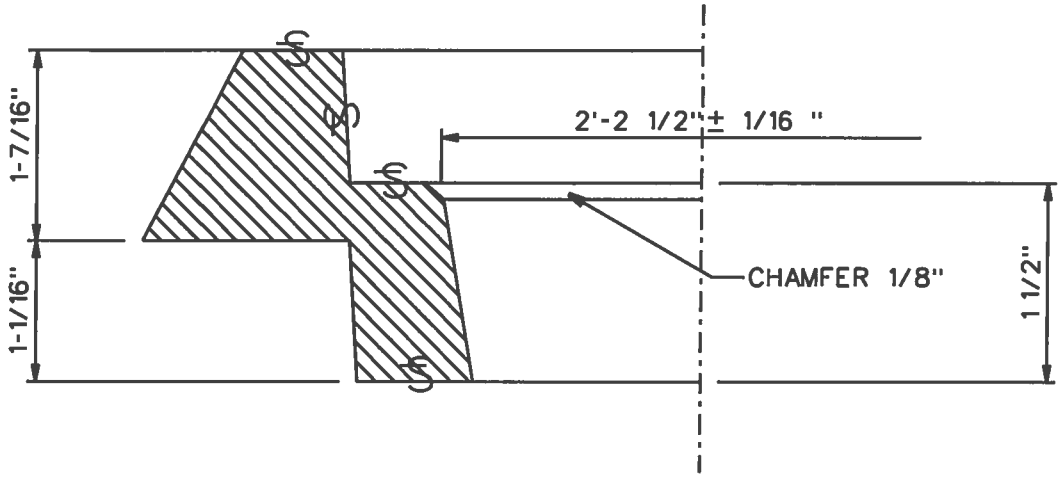

SECTION B-B

NOTES

1: ALL CASTING SHALL CONFORM TO STANDARD SPECIFICATIONS FOR GRAY IRON CASTINGS A.S.T.M. DESIGNATION A-48 OR LATEST REVISIONS.
2: STOCK NO. 9721-0603 SHALL APPEAR ON THE CASTING. APPROXIMATIV WEIGHT 69LBS.
3: S MACHINE FINISH.
4: EACH CASTING SHALL BE IDENTIFIED WITH THE MANUFACTURER'S NAME OR LOGO
5: CASTINGS SHALL BE FREE FROM SAND OR BLOW HOLES AND SHARP EDGES.
6: WITH EXCEPTION ONLY TO ANY NOTED TOLERANCES, NO DIMENSION SHALL EXCEED ± 1/16" / FT.
7: SEE DWG 6-2-0431 FOR 28" MH COVER
8: SEE DWG 6-2-0432 FOR 28" MH COVER FRAME ROADWAY TYPE
9: SEE DWG 6-2-0433 FOR 28" MH COVER FRAME SIDEWALK TYPE
10: REV D: CHANGE DWG FORMAT AND CHANGE STOCK No's FOR WMIS
11: REV E: CHANGE DWG FORMAT.

COMPATIBLE UNIT 28" MANHOLE 1-1/2" ADJUSTING RING FRAME			
QTY	STOCK#	DESCRIPTION	
1	9721-0603	RING 28" MH COVER 1-1/2" ADJUST	EA
	DESIGNATION	DESCRIPTION	
MHAR15X28MY		MH CVR ADJ RING 28" x 1.5"	

DRAWN: AVI	DVLPED: JR	DATE: 04-11-02	REVIEWED: TWM	DATE: 9/14/04	APPRVD: MDW	DATE: 02-21-08	NEXT REVIEW: 02-11	REV: E

PHI PEPCO

POWER DISTRIBUTION STANDARDS

28" MANHOLE 1-1/2" ADJUSTING RING FRAME

...\DGN\2-2-0429_2-2.dgn 4/3/2008 1:33:40 PM

2-2-0430.1.2

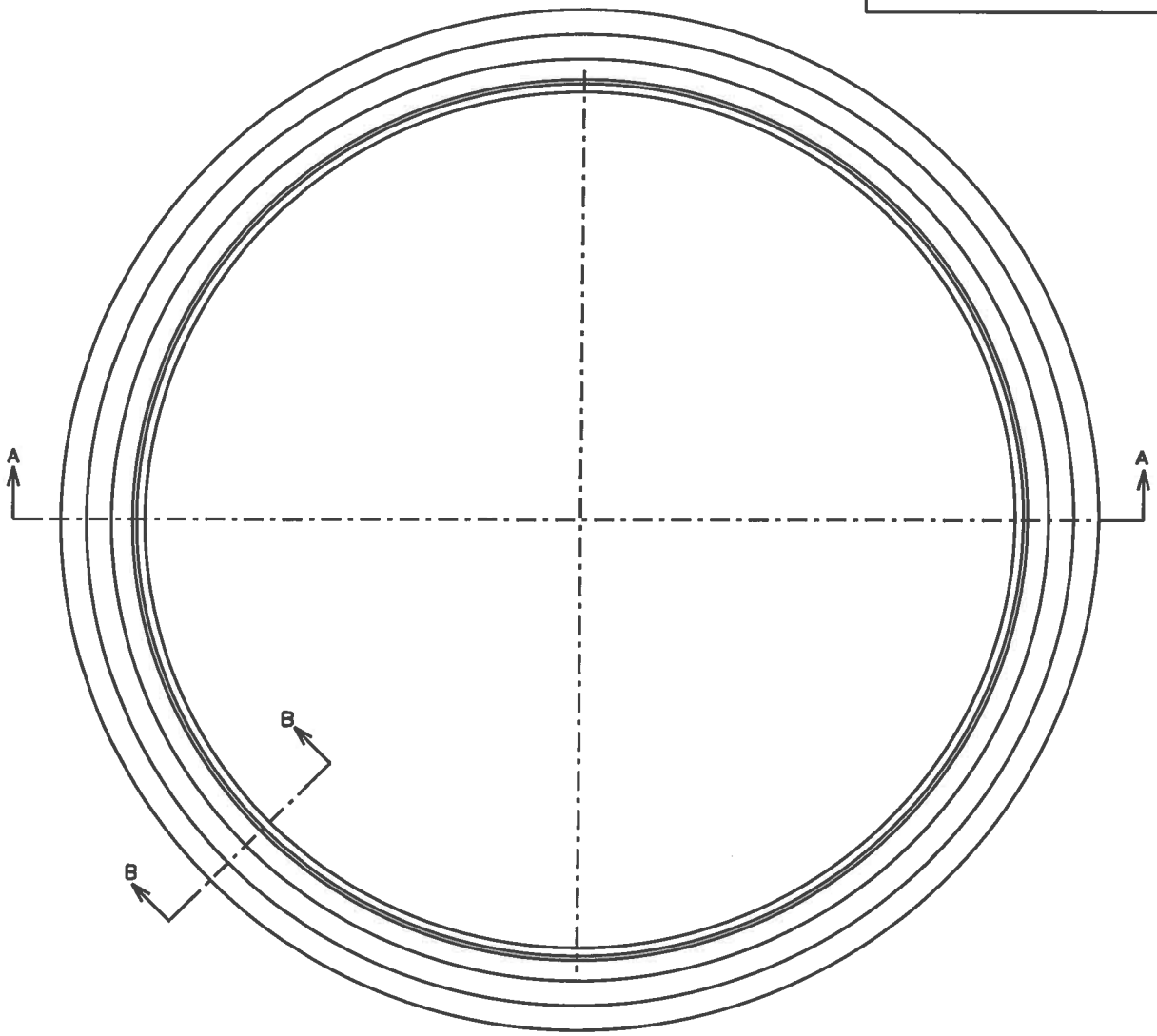

PLAN VIEW

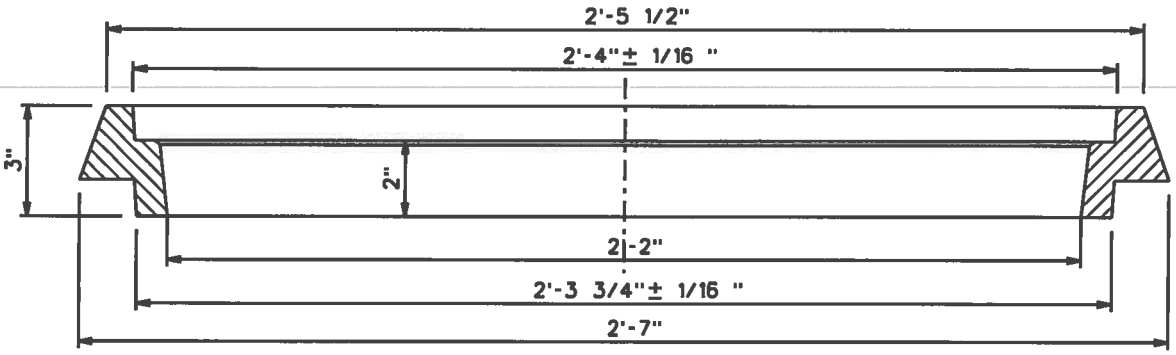

SECTION A-A

NOTES: SEE PAGE 2

DRAWN: AVI	DVLPED: JR	DATE: 04-11-02	REVIEWED: TWM	DATE: 9/15/04	APPRVD: MOW	DATE: 02-21-08	NEXT REVIEW: 02-11	REV: E

PHI PEPCD

POWER DISTRIBUTION STANDARDS

28" MANHOLE 2" ADJUSTING RING

...\DGN\2-2-0430_1-2.dgn 4/3/2008 2:11:39 PM

2-2-0430.2.2

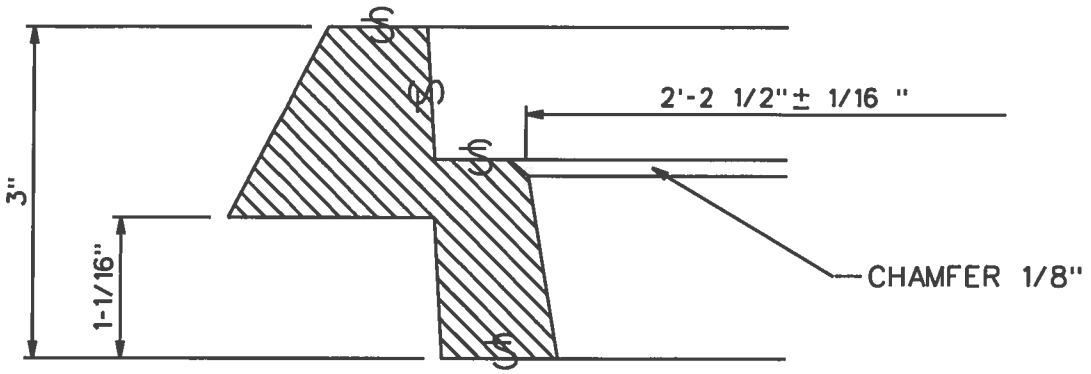

SECTION B-B

NOTES

1: ALL CASTING SHALL CONFORM TO STANDARD SPECIFICATIONS FOR GRAY IRON CASTINGS A.S.T.M. DESIGNATION A-48 OR LATEST REVISIONS.
2: STOCK NO. 9721-0604 SHALL APPEAR ON THE CASTING. APPROXIMATIV WEIGHT 87LBS.
3: S MACHINE FINISH.
4: EACH CASTING SHALL BE IDENTIFIED WITHTHE MANUFACTURER'S NAME OR LOGO
5: CASTINGS SHALL BE FREE FROM SAND OR BLOW HOLES AND SHARP EDGES.
6: WITH EXCEPTION ONLY TO ANY NOTED TOLERANCES, NO DIMENSION SHALL EXCEED ± 1/16" / FT.
7: SEE DWG 2-2-0431 FOR 28" MH COVER
8: SEE DWG 2-2-0432 FOR 28" MH COVER FRAME ROADWAY TYPE
9: SEE DWG 2-2-0433 FOR 28" MH COVER FRAME SIDEWALK TYPE
10: REV D: CHANGE DWG FORMAT AND CHANGE STOCK No's FOR WMIS
11: REV E: CHANGE DWG FORMAT.

COMPATIBLE UNIT 28" MANHOLE 2" ADJUSTING RING FRAME		
QUANTITY	STOCK#	DESCRIPTION
1	9721-0604	RING 28" MH COVER 2" ADJUST
	DESIGNATION	DESCRIPTION
	MHAR2X28MY	MH CVR ADJ RING 28" x 2"

DRAWN: AVI	DVLPED: JR	DATE: 04-11-02	REVIEWED: TWM	DATE: 9/15/04	APPRVD: MDW	DATE: 02-21-08	NEXT REVIEW: 02-11	REV: E

PHI PEPCO

POWER DISTRIBUTION STANDARDS

28" MANHOLE 2" ADJUSTING RING

...\DGN\2-2-0430_2-2.dgn 4/3/2008 2:28:32 PM

2-2-0431.1.2

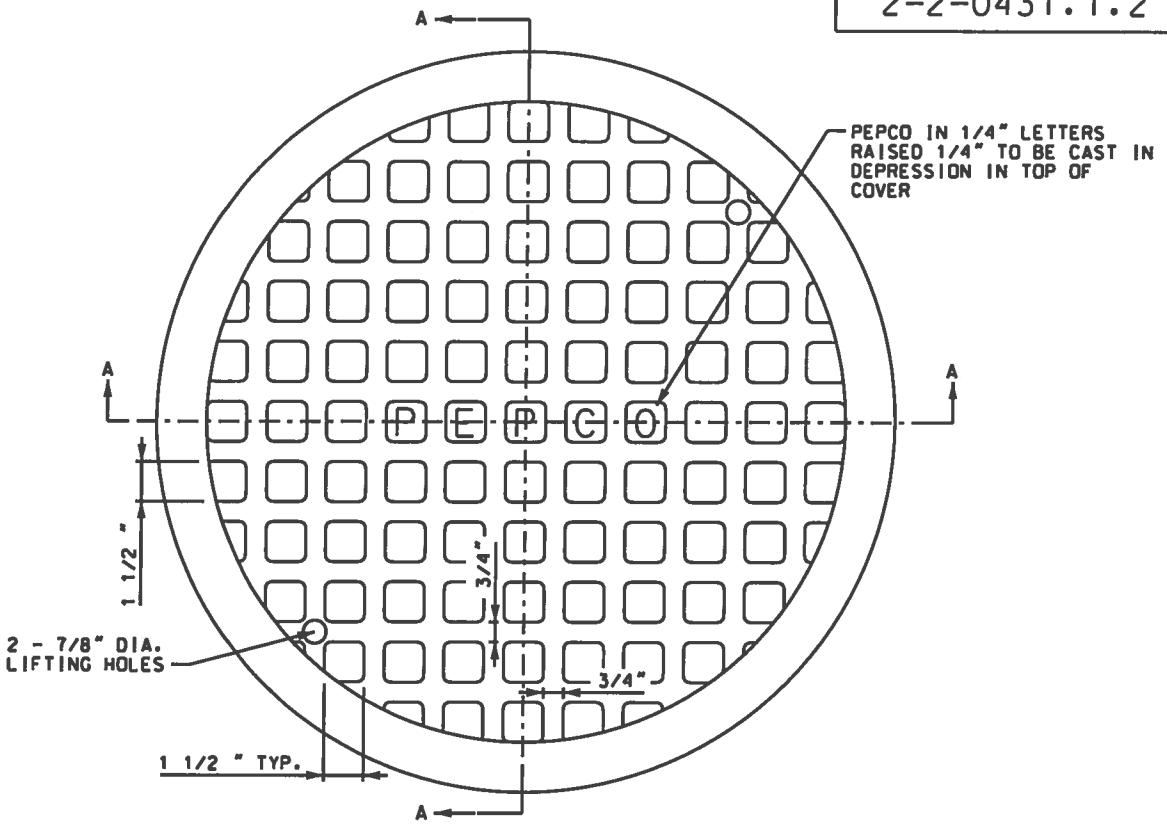

TOP VIEW

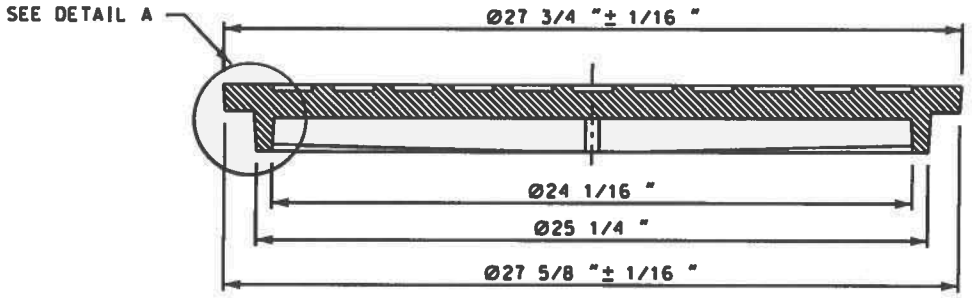

SECTION A-A

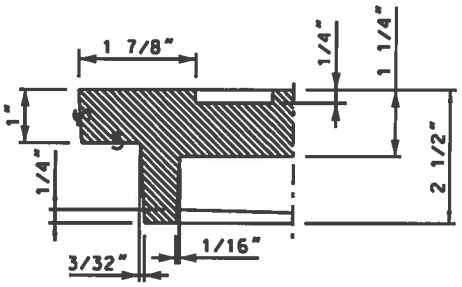

DETAIL A

NOTES:

1. SEE PAGE 2
2. REV D: CHANGED DWG FORMAT.

DRAWN: AVI	DVLPED: JR DATE: 8/7/86	REVIEWED: TWM DATE: 9/15/04	APPRVD: MDW DATE: 02-21-08	NEXT REVIEW: 02-11	REV: D

PHI PEPCO

POWER DISTRIBUTION STANDARDS

28" MANHOLE COVER

...\DGN\2-2-0431_1-2.dgn 4/3/2008 3:29:09 PM

2-2-0431.2.2

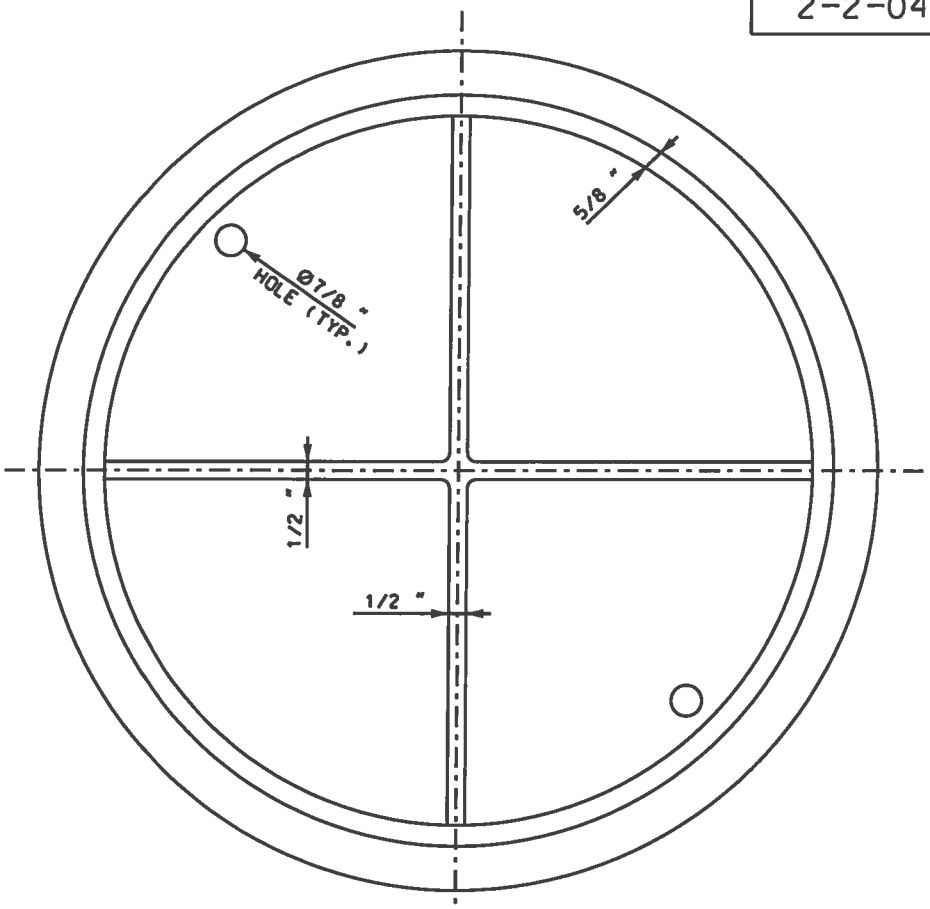

BOTTOM VIEW

NOTES:

1: ALL CASTING SHALL CONFORM TO STANDARD SPECIFICATIONS FOR GRAY IRON CASTINGS A.S.T.M. DESIGNATION A-48 CLASS 35 LATEST REVISIONS.

2: STOCK NO. 9721-0637 SHALL APPEAR ON THE CASTING. APPROXIMATE WEIGHT 156LBS.

3: ~~S~~ MACHINE FINISHED.

4: EACH CASTING SHALL BE IDENTIFIED WITHTHE MANUFACTURER'S NAME OR LOGO.

5: CASTINGS SHALL BE FREE FROM SAND OR BLOW HOLES AND SHARP EDGES.

6: WITH EXCEPTION ONLY TO ANY NOTED TOLERANCES. NO DIMENSION SHALL EXCEED ±1/16" / FT.

7: SEE DWG 4-2-0432 FOR 28" MH COVER FRAME ROADWAY TYPE.

8: SEE DWG 4-2-0433 FOR 28" MH COVER FRAME SIDEWALK TYPE.

9: MANUFACTURER TO VERIFY THAT COVER IS DESIGNED FOR H20 LOADING.

10: REV D: CHANGED DWG FORMAT AND CHANGED STOCK NO'S PER WMIS.

COMPATIBLE UNIT 24" MANHOLE COVER		
QTY	STOCK#	DESCRIPTION
1	9721-0637	COVER 28" MANHOLE ROADWAY
	DESIGNATION	DESCRIPTION
MHC28MY		MH CVR 28" ML CD

DRAWN: AVI	DVLPED: JR DATE: 8/7/86	REVIEWED: TWM DATE: 9/15/04	APPRVD: MDW DATE: 02-21-08	NEXT REVIEW: 02-11	REV: D

PHI PEPCO

POWER DISTRIBUTION STANDARDS

28" MANHOLE COVER

...\DGN\2-2-0431_2-2.dgn 4/3/2008 3:37:05 PM

0432.1.2

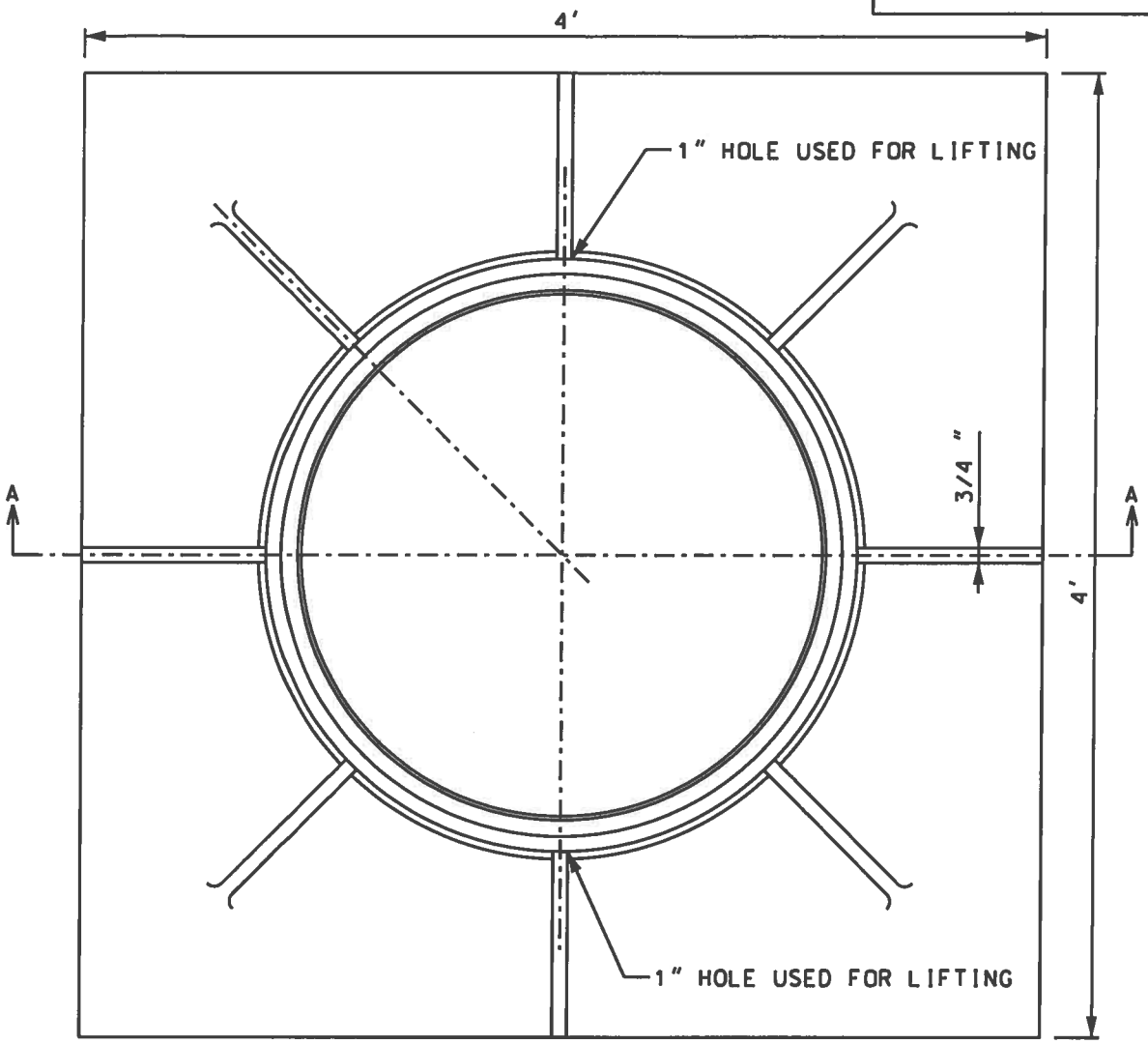

PLAN VIEW

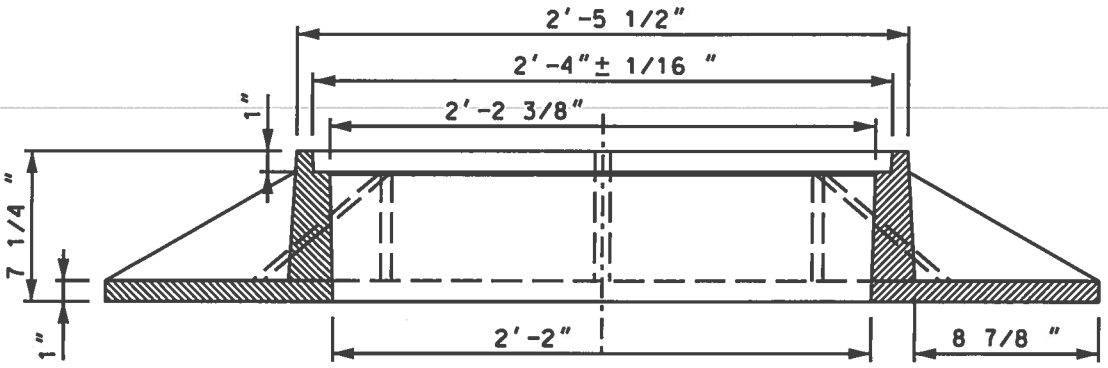

SECTION A-A

NOTES:
1. SEE PAGE 2
2. REV. B: CHANGE DWG FORMAT AND CHANGED STOCK No's FOR WMIS

DRAWN: AVI	DVLPED: JR	DATE: 3/17/88	REVIEWED: TWM	DATE: 9/15/04	APPRVD: MDW	DATE: 02-11-08	NEXT REVIEW: 02-11	REV: B

PHI PEPCO

POWER DISTRIBUTION STANDARDS

28" MANHOLE COVER FRAME ROADWAY TYPE

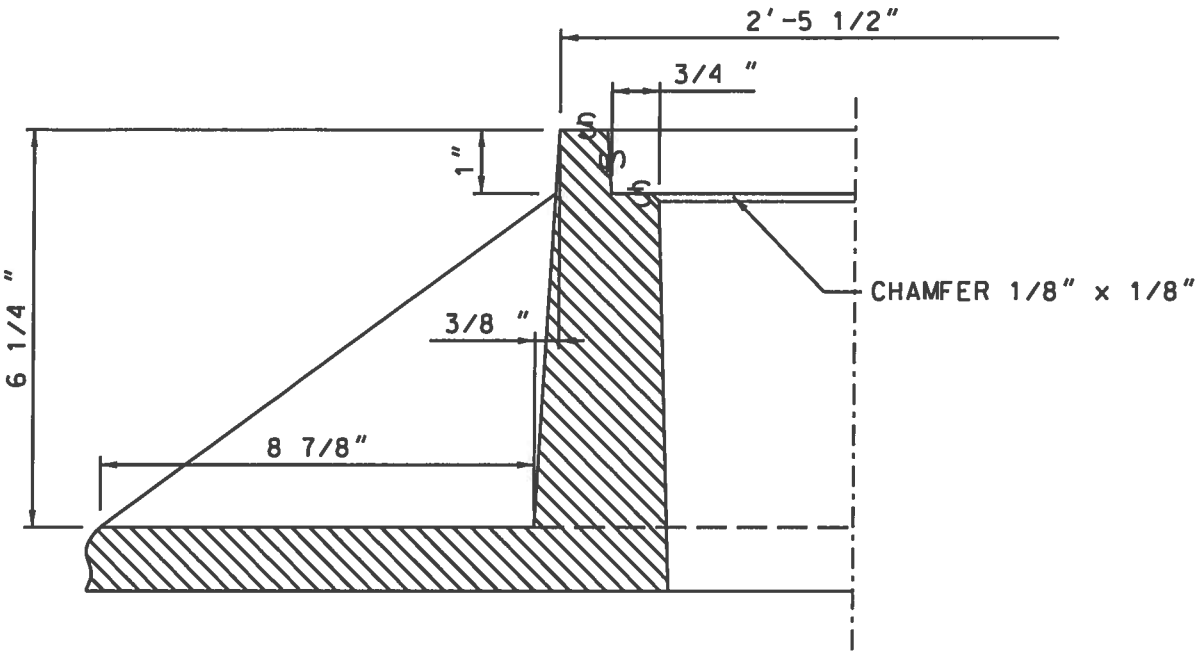

DETAIL "A"

NOTES:

1. ALL CASTING SHALL CONFORM TO STANDARD SPECIFICATIONS FOR GRAY IRON CASTINGS A.S.T.M. DESIGNATION A-48 OR LATEST REVISIONS.
2. STOCK NO. 9721-0624 SHALL APPEAR ON THE CASTING. APPROXIMATIV WEIGHT 820LBS.
3. ⊕ MACHINE FINISH.
4. EACH CASTING SHALL BE IDENTIFIED WITHTHE MANUFACTURER'S NAME OR LOGO
5. CASTINGS SHALL BE FREE FROM SAND OR BLOW HOLES AND SHARP EDGES.
6. WITH EXCEPTION ONLY TO ANY NOTED TOLERANCES. NO DIMENSION SHALL EXCEED ±1/16" / FT.
7. SEE DWG 0431 FOR 28" MH COVER
8. REV B: CHANGED DWG FORMAT AND CHANGED STOCK NO'S PER WMIS.

COMPATIBLE UNIT 28" MANHOLE COVER FRAME ROADWAY TYPE		
QTY	STOCK#	DESCRIPTION
1	9721-0624	FRAME HANDHOLE COVER 28" OPENING ROADWAY
	DESIGNATION	DESCRIPTION
	MHCF28RMY	MH COV FRAME 28" RDWY ML CO

DRAWN: AVI	DVLPED: JR DATE: 3/17/88	REVIEWED: TWM DATE: 9/15/04	APPRVD: MDW DATE: 02-21-08	NEXT REVIEW: 02-11	REV: B

PHI PEPCO

POWER DISTRIBUTION STANDARDS

28" MANHOLE COVER FRAME ROADWAY TYPE

0433.1.3

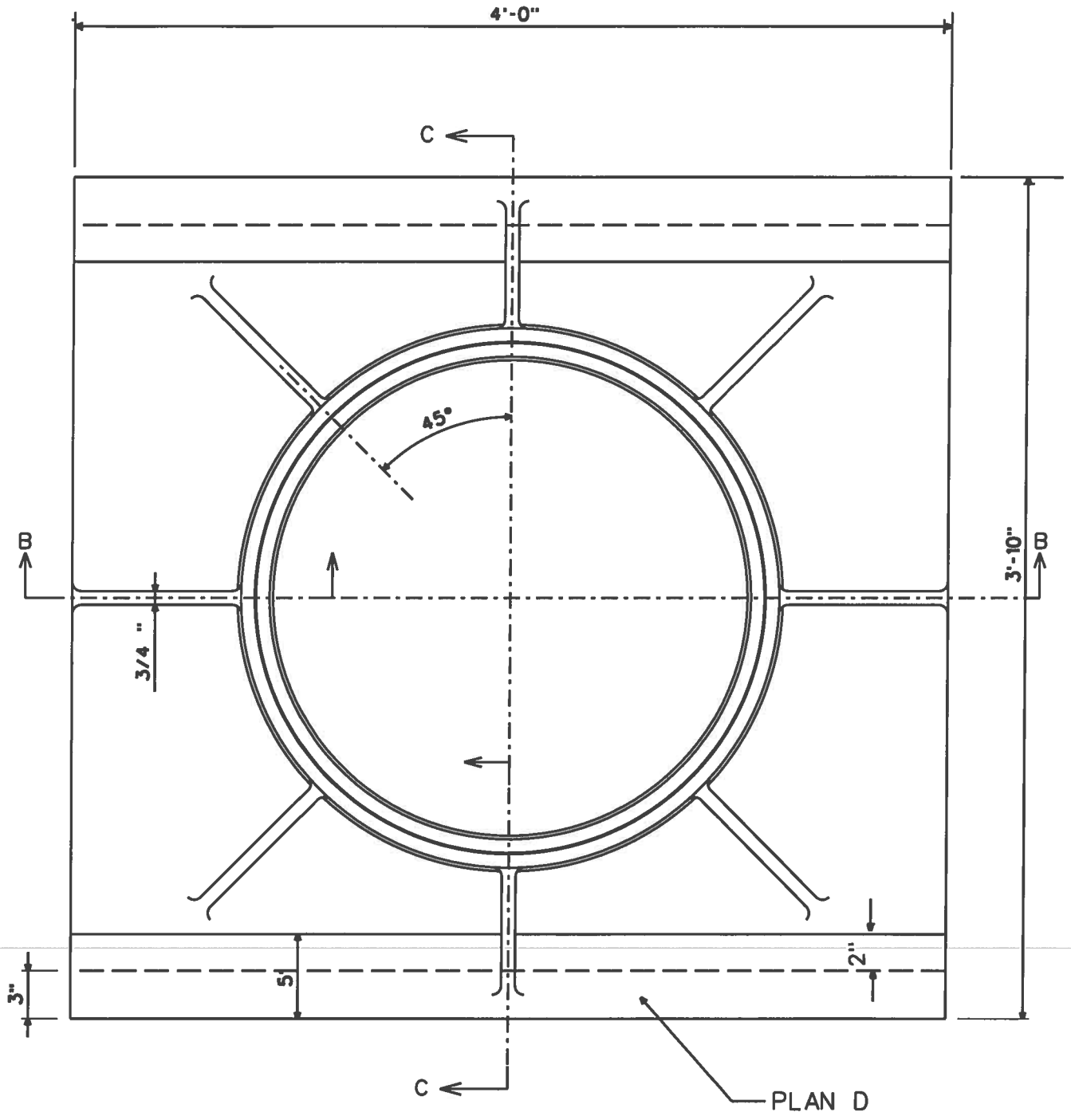

PLAN VIEW

NOTES :
SEE PAGE 3
REV F: Revised Text.

DRAWN: AVI	DVLPED: CER DATE: 2-10-82	REVIEWED:RLH DATE: 5/13/13	APPRVD:JKP DATE: 5/13/13	NEXT REVIEW: 5/16	REV: F

PHI PEPCO

POWER DISTRIBUTION STANDARDS

28" MANHOLE COVER FRAME SIDEWALK TYPE

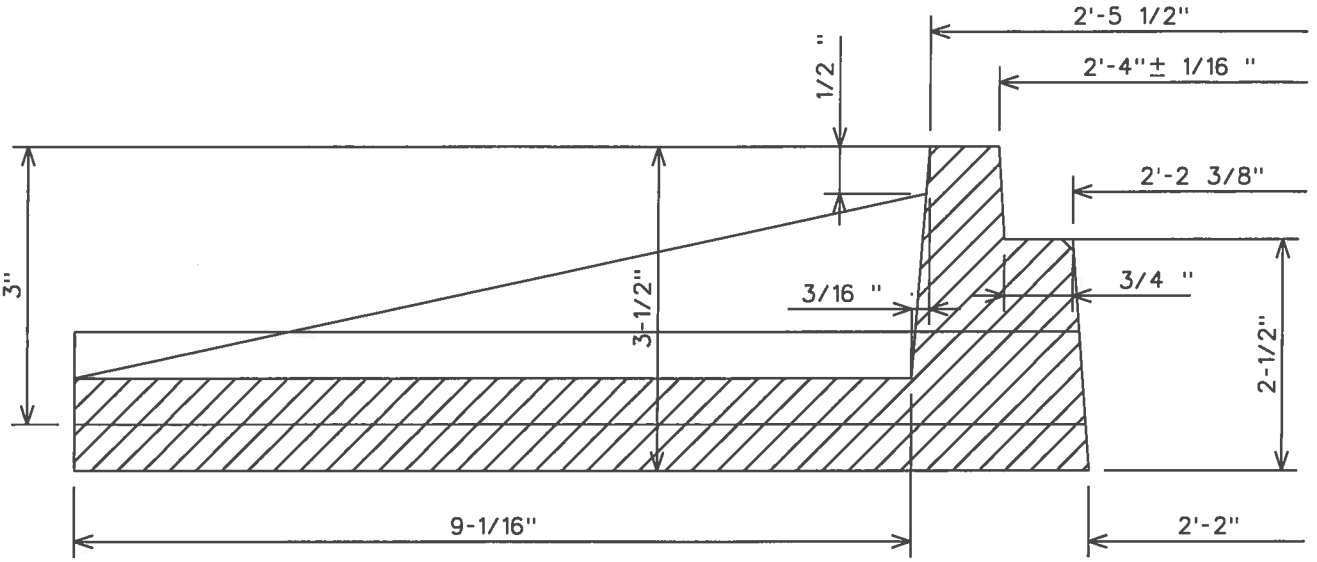

SECTION C-C

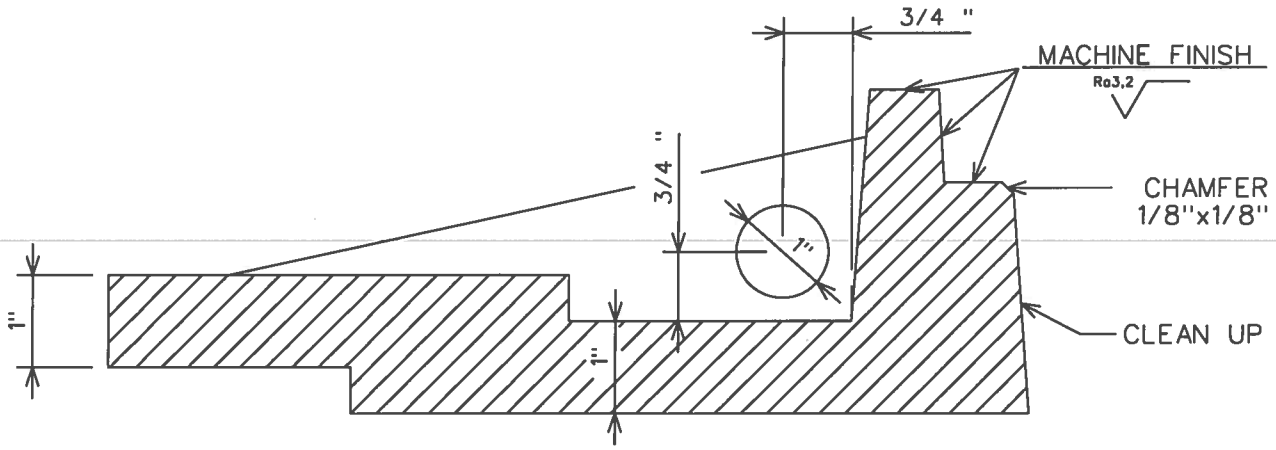

SECTION B-B

NOTES:
SEE PAGE 3
REV F: Revised Text.

DRAWN: AVI	DVLPED: CER DATE: 2-10-82	REVIEWED: RLH DATE: 5/13/13	APPRVD: JKP DATE: 5/13/2013	NEXT REVIEW: 5/16	REV: F

PHI PEPCO

POWER DISTRIBUTION STANDARDS

28" MANHOLE COVER FRAME SIDEWALK TYPE

NOTES

1: ALL CASTING SHALL CONFORM TO STANDARD SPECIFICATIONS FOR GRAY IRON CASTINGS A.S.T.M. DESIGNATION A-48 OR LATEST REVISIONS.

2: STOCK NO. 9721-0610 SHALL APPEAR ON THE CASTING. APPROXIMATE WEIGHT = 512 LBS.

3: PLAN D SHALL NOT BE WARPED ±1/4"

4: EACH CASTING SHALL BE IDENTIFIED WITH THE MANUFACTURER'S NAME OR LOGO.

5: CASTINGS SHALL BE FREE FROM SAND OR BLOW HOLES AND SHARP EDGES.

6: WITH EXCEPTION ONLY TO ANY NOTED TOLERANCES, NO DIMENSION SHALL EXCEED ±1/16" / FT.

7: CHANGE DWG. FORMAT AND CHANGE STOCK No's FOR WMIS.

8: REV F: Revised Text.

COMPATIBLE UNIT 28" MANHOLE COVER FRAME SIDEWALK TYPE

QTY	STOCK#	DESCRIPTION	
1	9721-0610	FRAME 28" MH COVER SIDEWALK	EA

DESIGNATION	DESCRIPTION
MHCF28SMY	MH COV FRAME 28" SDWK ML CO

DRAWN: AVI	DVLPED: CER DATE: 2-10-82	REVIEWED: RLH DATE: 5/13/13	APPRVD: JKP DATE: 5/13/13	NEXT REVIEW: 05/16	REV: F

PHI PEPCO

POWER DISTRIBUTION STANDARDS

28" MANHOLE COVER FRAME SIDEWALK TYPE

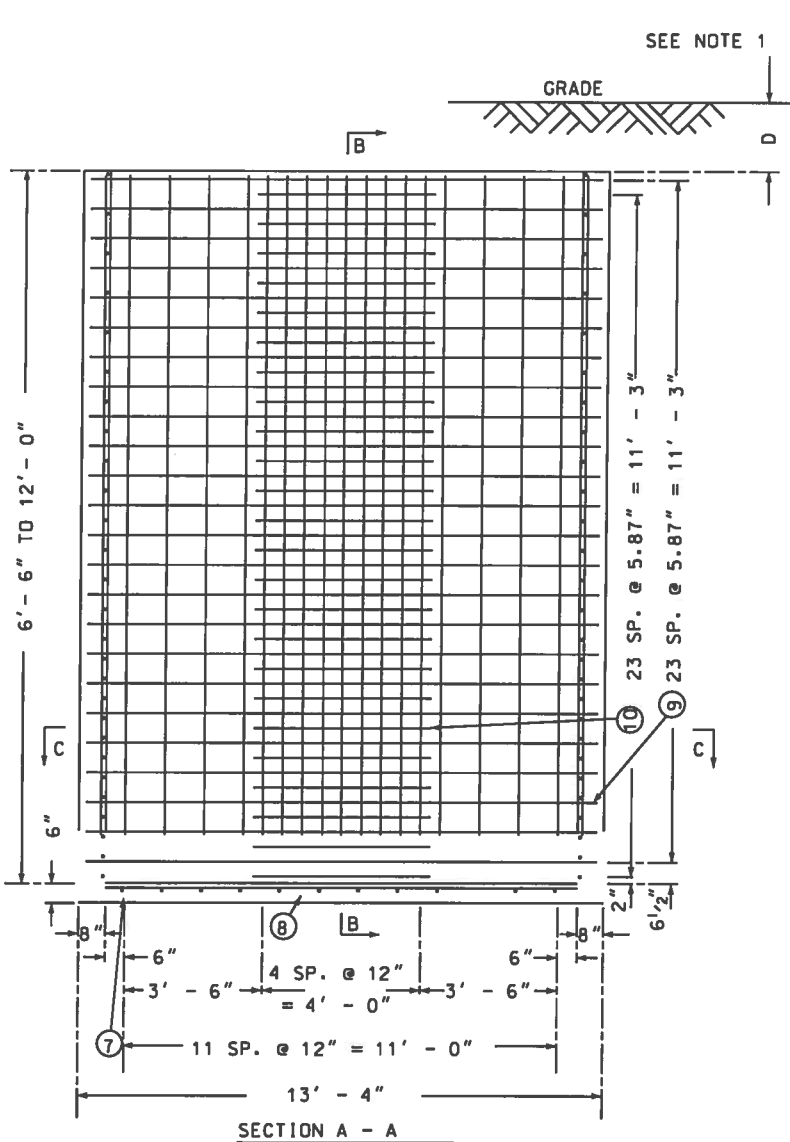

SECTION A - A

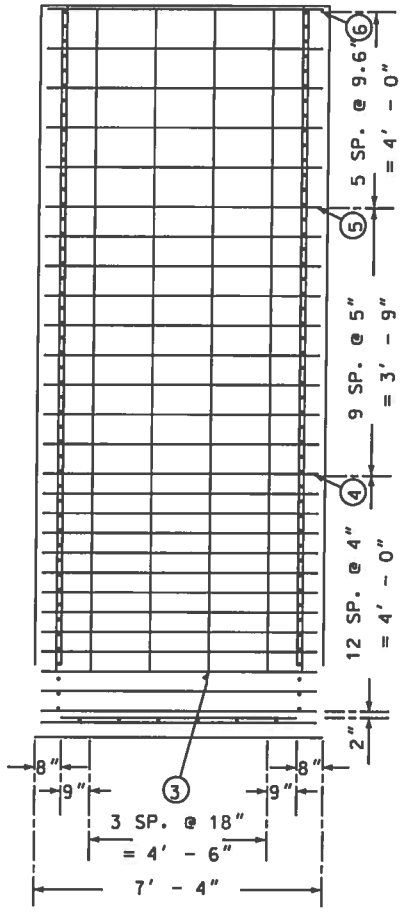

SECTION B - B

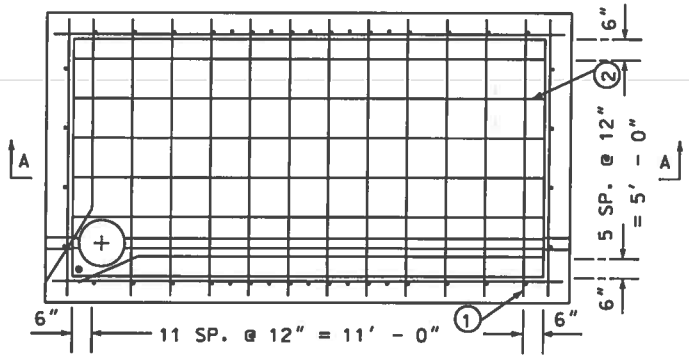

SECTION C - C

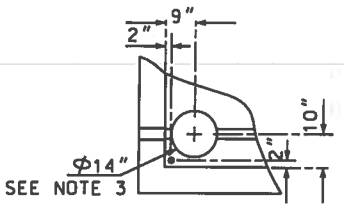

NOTES:

1. THE DISTANCE OF THE SHEETING TO INNER WALL OF MANHOLE IS 1½" ALL AROUND.

DRAWN: DPJ DVLPED: ___ DATE: _____	REVIEWED: RLH DATE: 11-23-11	APPRVD: JKP DATE: 11-23-11	NEXT REVIEW: 11-14	REV: B

PHI PEPCO

POWER DISTRIBUTION STANDARDS

6' x 12' MANHOLE (CAST IN PLACE)

NOTES:

1. D (FLUSH SDWK.) = 6" MINIMUM.
   D (FLUSH RDWK.) = 9" MINIMUM.
   D (RECESSED SDWK.) = 18" MINIMUM.
   D (RECESSED RDWK.) = 21" MINIMUM.

2. SP. = SPACERS
   NUMBERS IN CIRCLE INDICATES ROD NUMBER IN STEEL REINFORCING SCHEDULE

3. INSTALL:
   SUMP PIT PER DWG. 2-2-1060
   GROUNDING PER DWG. 2-2-1096
   DRAINAGE DUCT BETWEEN MANHOLES PER DWG. 2-2-1097

4. WHEN INSTALLING MANHOLES END TO END OR SIDE BY SIDE, A MINIMUM OF 16" IS REQUIRED INSIDE WALL TO INSIDE WALL OF ABUTTING MANHOLES.

5. COMPATIBLE UNIT DESIGNATION:
   MH0612BMY, MH0612KY, MH0612MY OR MH0612RY.

DRAWN: DPJ DVLPED: --- DATE: --------	REVIEWED:RLH*DATE: 11-23-11	APPRVD: JKP DATE: 11-23-11	NEXT REVIEW: 11-14	REV: B

PHI PEPCO

POWER DISTRIBUTION STANDARDS

NOTES FOR 6'-0" X 12'-0" MANHOLE

FLOOR REINFORCING SCHEDULE

FLOOR (6" THICK)		
ROD NO.	1	2
QUANTITY	12	6
SIZE	#3	#3
C/C	12"	12"
LENGTH	7'	13'

CONCRETE SCHEDULE

FLOOR:	49	CU. FT.
WALLS:	26	CU. FT. PER 12" WALLS

MANHOLE WALLS REINFORCING SCHEDULE
(ALL WALLS ARE 8" THICK)

ROD NO.	③	④	⑤	⑥	⑦	⑧	⑨	⑩
DEPTH	6' - 6" DC							
QUANTITY	8	-	2	12	24	10	18	-
SIZE	#4	-	#5	#4	#5	#4	#6	-
C/C	18"	-	9"	12"	12"	12"	9"	-
LENGTH	6' - 9"	-	7'	7'	6'- 9"	6'- 9"	13'	-
DEPTH	8' - 0" DC							
QUANTITY	8	-	6	12	24	10	22	-
SIZE	#4	-	#5	#4	#5	#4	#6	-
C/C	18"	-	9"	12"	12"	12"	9"	-
LENGTH	8' - 3"	-	7'	7'	8'- 3"	8'- 3"	13'	-
DEPTH	9' - 0" DC							
QUANTITY	8	-	10	12	24	10	24	-
SIZE	#4	-	#5	#4	#5	#4	#6	-
C/C	18"	-	9"	12"	12"	12"	9"	-
LENGTH	9' - 3"	-	7'	7'	9'- 3"	9'- 3"	13'	-
DEPTH	10' - 0" DC							
QUANTITY	8	-	12	12	24	10	28	-
SIZE	#4	-	#5	#4	#5	#4	#6	-
C/C	18"	-	9"	12"	12"	12"	9"	-
LENGTH	10' - 3"	-	7'	7'	10'- 3"	10'- 3"	13'	-
DEPTH	11' - 0" DC							
QUANTITY	8	-	14	12	24	10	30	28
SIZE	#4	-	#5	#4	#5	#4	#6	#4
C/C	18"	-	9"	12"	12"	12"	9"	9"
LENGTH	11' - 3"	-	7'	7'	11'- 3"	11'- 3"	13'	4' - 6"

(CONTINUED ON SH. 4 OF 6)

DRAWN: DPJ DVLPED: ___ DATE: _____	REVIEWED:RLH DATE: 11-23-11	APPRVD: JKP DATE: 11-23-11	NEXT REVIEW: 11-14	REV: B

PHI PEPCO

POWER DISTRIBUTION STANDARDS

REINFORCEMENT FOR 6' X 12' MANHOLE

MANHOLE WALLS REINFORCING SCHEDULE
(ALL WALLS ARE 8" THICK)

ROD NO.	③	④	⑤	⑥	⑦	⑧	⑨	⑩
DEPTH	12' - 0" DC							
QUANTITY	8	-	18	12	24	10	32	32
SIZE	#4	-	#5	#4	#5	#4	#6	#4
C/C	18"	-	9"	12"	12"	12"	9"	9"
LENGTH	12'- 3"	-	7'	7'	12'- 3"	12'- 3"	13'	4'- 6"

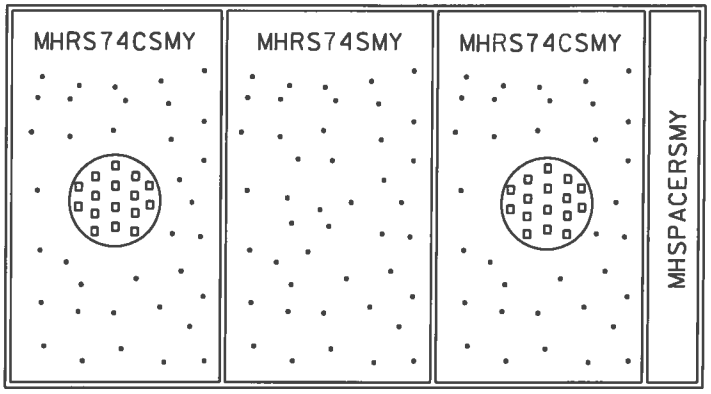

MH0612BS MH0612BPS
MH0612S MH0612PS
(SEE NOTE 1)

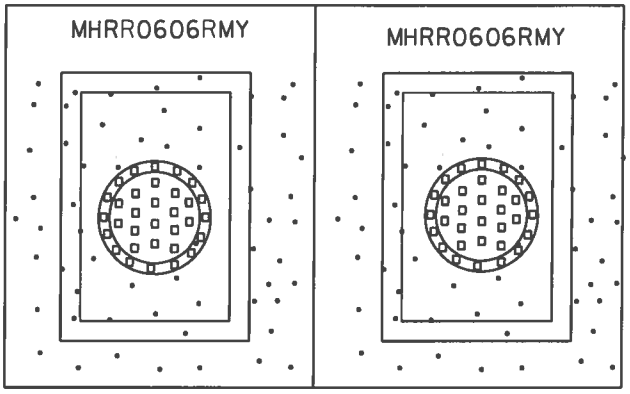

MH0612RR
MH0612BRR:

NOTE:

1. WHEN ENGINEERING ASSEMBLIES MH0612BPS OR MH0612PS ARE REQUIRED THE SIDEWALK SLABS ARE REPLACED WITH THE PAVER PANS OF THE CORRESPONDING CONSTRUCTION.

DRAWN: DPJ DVLPED: --- DATE: --------	REVIEWED:RLH DATE: 11-23-11	APPRVD: JKP DATE: 11-23-11	NEXT REVIEW: 11-14	REV: B

PHI PEPCO

POWER DISTRIBUTION STANDARDS

6′ x 12′ MH ROOF

ENGINEERING ASSEMBLY BREAKDOWN FOR 6'X12' MANHOLES									
QUANTITY						DESIGNATION	DESCRIPTION	REF DWG	STOCK NO.
2	2	2	2	2	2	MHC28MY	MH COVER 28" ML CO	2-2-0431	9721-0637
						MHCF28RMY	MH COV FR 28" RDWY ML CO	2-2-0432	9721-0624
		2	2			MHDACMY	MH DBL ACT COV ML CO	2-2-0434	9721-0640
		2	2			MHDAFRMY	MH DBL ACT COV FR RDWY ML CO	2-2-0427	9721-0611
1	1			1	1	MHRF0612SMY	MH RF FRAME 6X12 SDWK ML CO	2-2-1184	9721-0207
		2	2			MHRR0606RMY	MH RECESSED ROOF 6X6RDWY ML CO	2-2-1141	9721-0564
				1	1	MHRS74SMY	MH RF SLAB 7X4 SDWK ML CO	2-2-1327	9721-0661
				2	2	MHRP74CSMY	MH RF SLAB 7X4 SAC SWK ML CO	2-2-1327	9721-0662
1	1					MHRP74SMY	MH RF PAN 7X4 SDWK ML CO	2-2-1327	9721-0222
2	2					MHRP74CSMY	MH RF PAN 7X4 SAC SDWK ML CO	2-2-1327	9721-0223
1	1			1	1	MHSPACERSMY	MH SPACER FOR SDWK MH ML CO	2-2-1386	9721-0669
	1		1		1	MH0612MY	MH 6X12X6.5 DC ML CO	2-2-0418	-
1		1		1		MH0612BMY	MH 6X12X10 DC BUS ML CO	2-2-0418	-

	DESCRIPTION
MH0612S	MH 6X12 SDWK TYPE
MH0612BS	MH 6X12 BUS SDWK TYPE
MH0612RR	MH 6X12 RECESSED RDWY TYPE
MH0612BRR	MH 6X12 BUS RECESSED RDWY TYPE
MH0612PS	MH 6X12 PAVERS SDWK TYPE
MH0612BPS	MH 6X12 BUS PAVERS SDWK TYPE

NOTE:

1. WHEN ENGINEERING ASSEMBLIES MH0612BPS OR MH0612PS ARE REQUIRED THE SIDEWALK SLABS ARE REPLACED WITH THE PAVER PANS OF THE CORRESPONDING CONSTRUCTION.

DRAWN: DPJ DVLPED: ___ DATE: _____	REVIEWED:RLH DATE: 11-23-11	APPRVD: JKP DATE: 11-23-11	NEXT REVIEW: 11-14	REV: B

PHI PEPCO

POWER DISTRIBUTION STANDARDS

6' x 12' MH ROOF

NOTES:

1. 5,000 psi Concrete at 28 days.
2. Reinforcing - ASTM 615 Grade 60.
3. Designed for AASHTO HS20-44 live load at surface.
4. Thickness:
   Walls - 6"
   Floor - 6"
5. Weight: 23,808 lbs.

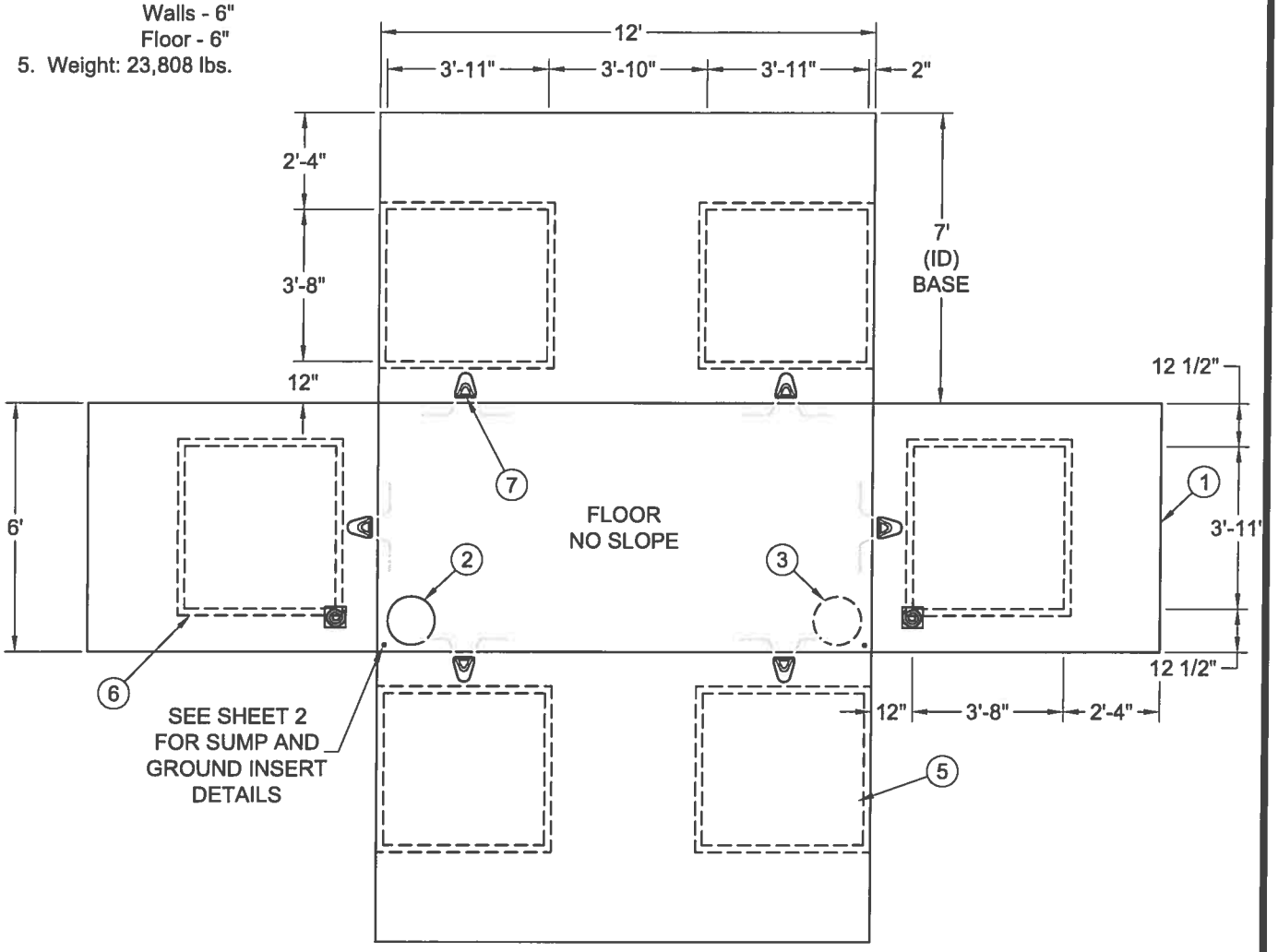

INTERIOR FOLD OUT VIEW

WALLS FOLD UP

LEGEND:

1. SHIP LAP GROOVE.
2. 16" Ø SUMP HOLE THRU FLOOR.
3. 16" Ø x 4" DEEP SUMP (FLUSH AT TOP).
4. 1" Ø HOLE THRU FLOOR FOR GROUNDING ROD.
5. (4) 44" H x 47" W x 3" T KNOCKOUT PANELS ON LONG WALL.
6. (2) 44" H x 47" W x 3" T KNOCKOUT PANELS ON SHORT WALL.
7. (6) PA INSERT MOLDED PULLING IRON w/PULLING IRON POCKET AT BOTTOM OF SHORT AND LONG WALLS FOR LIFTING.
8. 6" x 6" x 2" RECESS w/#4/0 STANDARD COPPER TINNED WIRE CLAMPED TO MAT SHEET 36" LONG EXPOSED PIGTAIL RECESS TO BE PATCHED OVER PRIOR TO SHIPMENT

NPCA CERTIFIED PLANT

GILLESPIE PRECAST LLC

1-800-638-6884
www.gillespieprecast.com

6'-0" x 12'-0" x 7'-0" Precast MH Base
PEPCO Line or Buss MH

DRAWN BY:		DWG.:
JHP		1 of 6
SCALE: 1/4" = 1'-0"	DATE: 12/14/11	PRODUCT NO.: B72X144X7-12.11

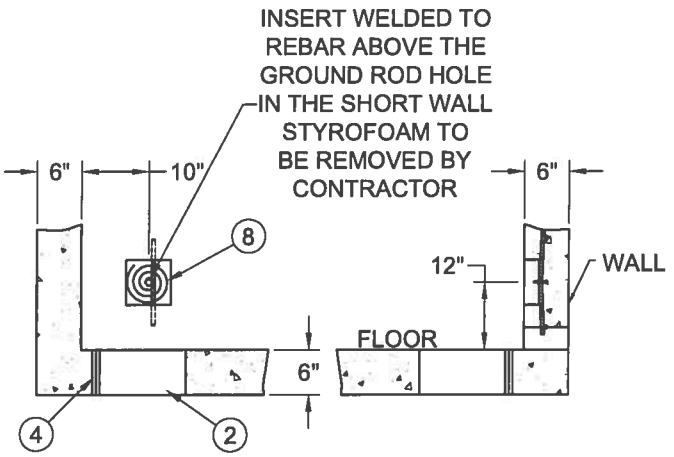

END VIEW SIDE VIEW

END WALL DETAIL

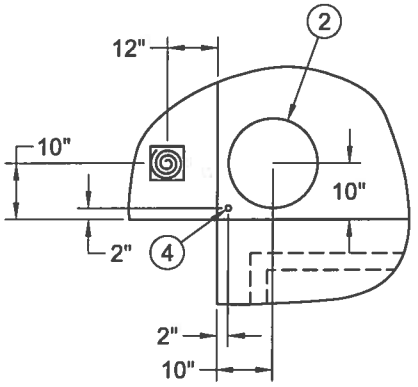

SUMP DETAIL - FLOOR

LEGEND:

1. SHIP LAP GROOVE.
2. 16" Ø SUMP HOLE THRU FLOOR.
3. 16" Ø x 4" DEEP SUMP (FLUSH AT TOP).
4. 1" Ø HOLE THRU FLOOR FOR GROUNDING ROD.
5. (4) 44" H x 47" W x 3" T KNOCKOUT PANELS ON LONG WALL.
6. (2) 44" H x 47" W x 3" T KNOCKOUT PANELS ON SHORT WALL.
7. (6) PA INSERT MOLDED PULLING IRON w/PULLING IRON POCKET AT BOTTOM OF SHORT AND LONG WALLS FOR LIFTING.
8. 6" x 6" x 2" RECESS w/#4/0 STANDARD COPPER TINNED WIRE CLAMPED TO MAT SHEET 36" LONG EXPOSED PIGTAIL RECESS TO BE PATCHED OVER PRIOR TO SHIPMENT

NPCA CERTIFIED PLANT

GILLESPIE PRECAST LLC

1-800-638-6884
www.gillespieprecast.com

6'-0" x 12'-0" x 7'-0" Precast MH Base PEPCO Line or Buss MH

DRAWN BY:		DWG.:
JHP		2 of 6
SCALE: 1/4" = 1'-0"	DATE: 12/14/11	PRODUCT NO.: B72X144X7-12.11

NOTES:
1. 5,000 psi Concrete at 28 days.
2. Reinforcing - ASTM 615 Grade 60.
3. Designed for AASHTO HS20-44 live load at surface.
4. Thickness: Walls - 6"
5. Weight: 8,445 lbs.

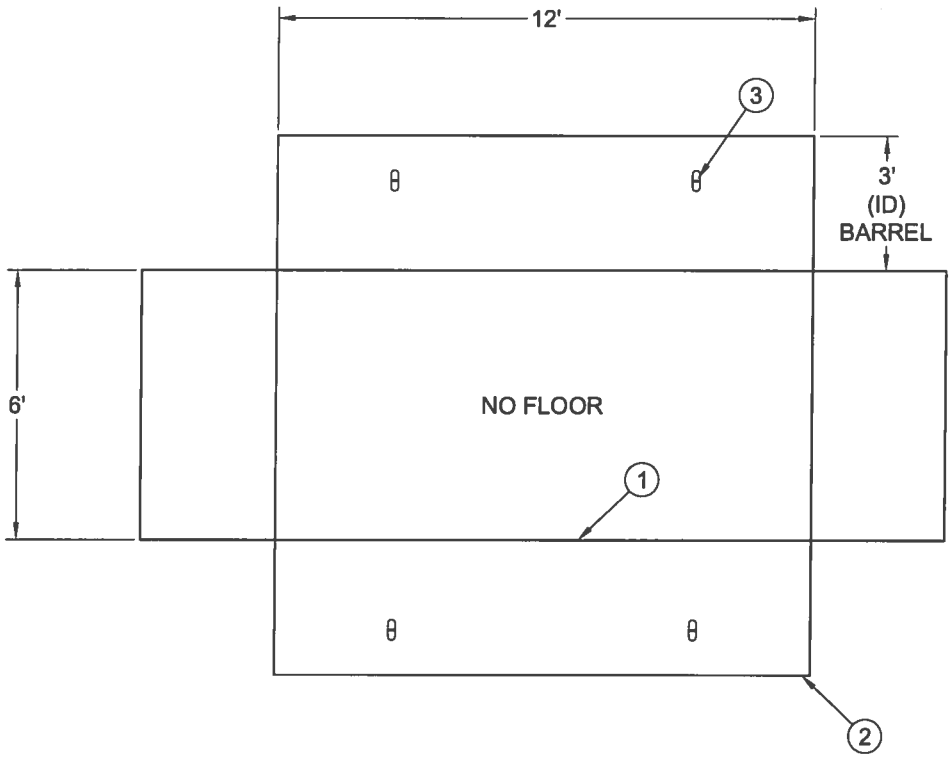

INTERIOR FOLD OUT VIEW
WALLS FOLD UP

LEGEND:

1. SHIPLAP CONSTRUCTION JOINT TO BASE UNIT. SEAL WITH CONSEAL CS-102 BUTYL RESIN.
2. FLAT JOINT ON TOP.
3. (4) 8" UTILITY ANCHORS IN WALLS FOR LIFTING.

NPCA CERTIFIED PLANT

GILLESPIE PRECAST LLC
1-800-638-6884
www.gillespieprecast.com

6'-0" x 12'-0" x 3'-0" Precast MH Riser
PEPCO Line Vault - 10'-0" H.R.

DRAWN BY:		DWG.:
JHP		4 of 6
SCALE: 1/4" = 1'-0"	DATE: 10/28/09	PRODUCT NO.: R72X144X3L-10.09

NOTES:
1. 5,000 psi Concrete at 28 days.
2. Reinforcing - ASTM 615 Grade 60.
3. Designed for AASHTO HS20-44 live load at surface.
4. Thickness: Walls - 6"
5. Weight: 11,536 lbs.

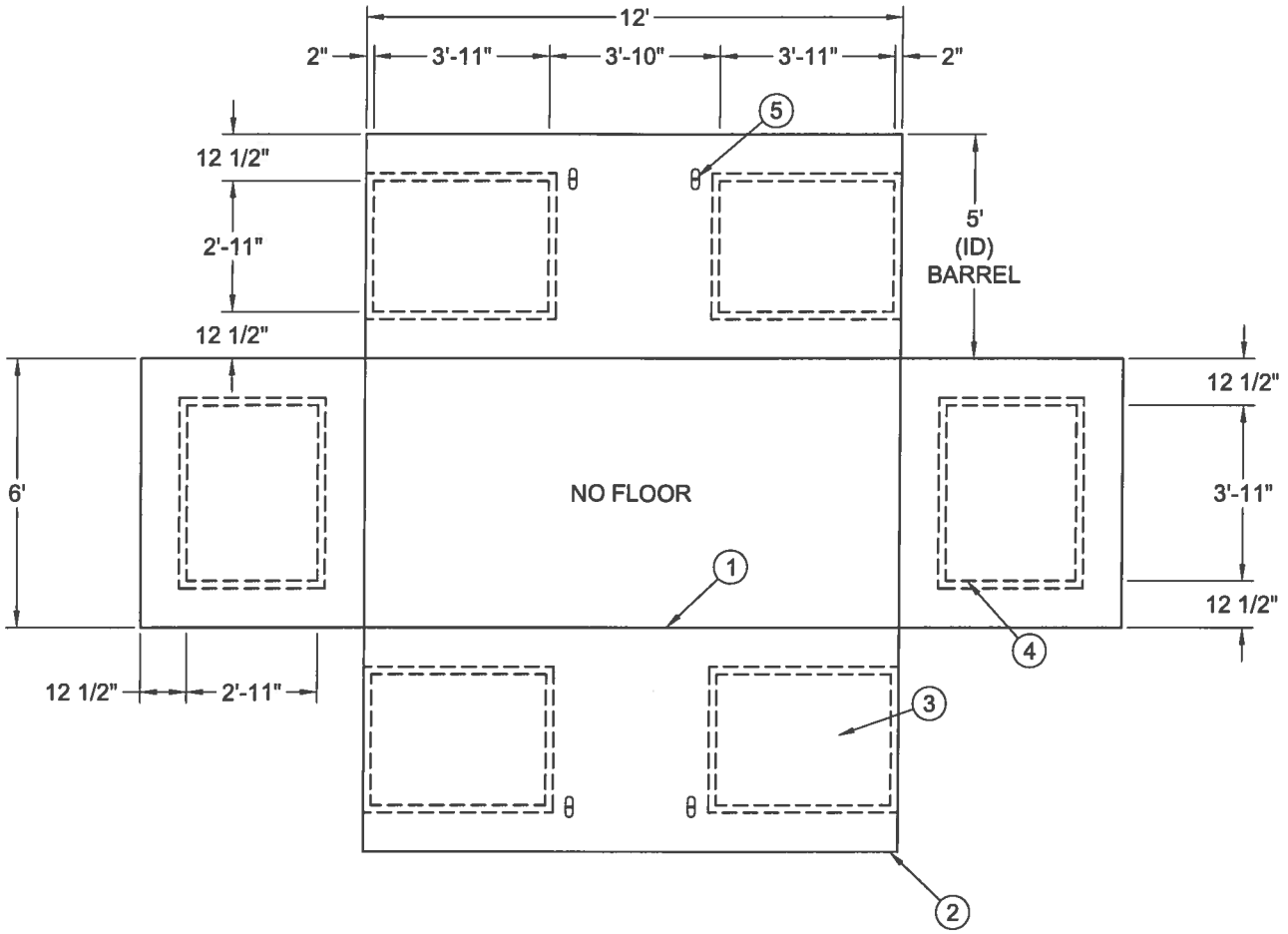

INTERIOR FOLD OUT VIEW
WALLS FOLD UP

LEGEND:

1. SHIPLAP CONSTRUCTION JOINT TO BASE UNIT. SEAL WITH CONSEAL CS-102 BUTYL RESIN.
2. FLAT JOINT ON TOP.
3. (4) 35" H x 47" W x 3" T KNOCKOUT PANELS ON LONG WALL
4. (2) 35" H x 47" W x 3" T KNOCKOUT PANELS ON SHORT WALL
5. (4) 8" UTILITY ANCHORS IN WALLS FOR LIFTING.

NPCA CERTIFIED PLANT

GILLESPIE PRECAST LLC
1-800-638-6884
www.gillespieprecast.com

6'-0" x 12'-0" x 5'-0" Precast MH Riser
PEPCO Line Vault - 12'-0" H.R.

DRAWN BY:		DWG.:
JHP		6 of 6
SCALE: 1/4" = 1'-0"	DATE: 10/28/09	PRODUCT NO.: R72X144X5L-10.09

0333.1.6

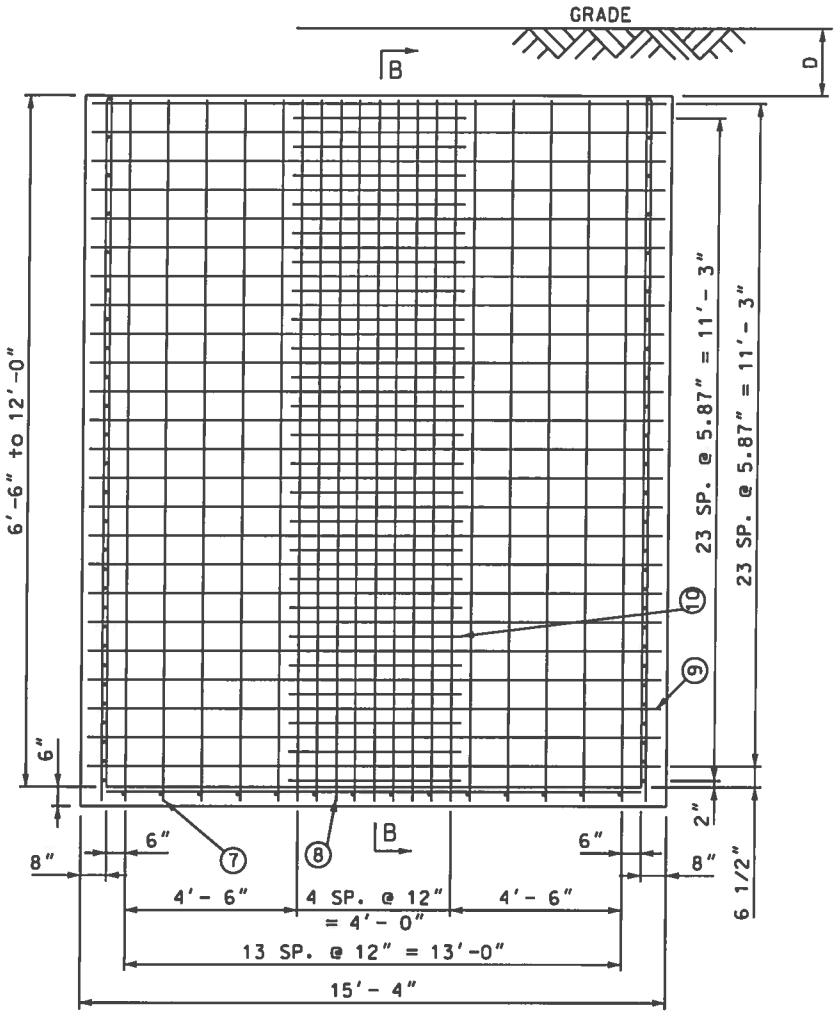

SECTION A - A

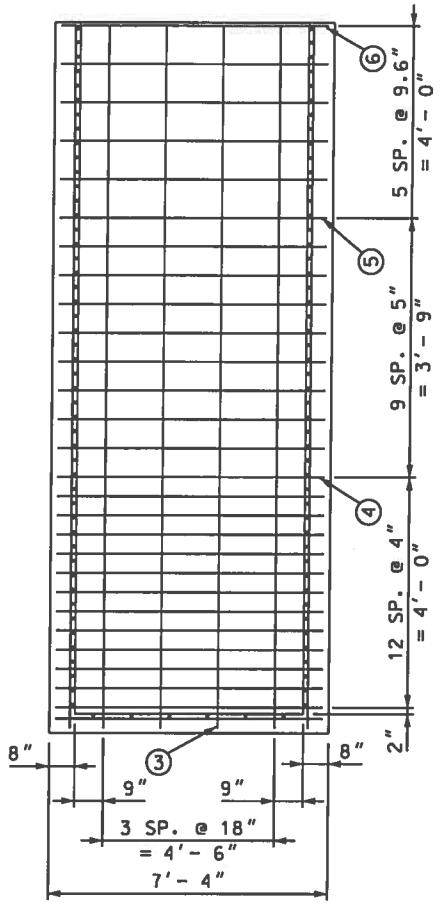

SECTION B - B

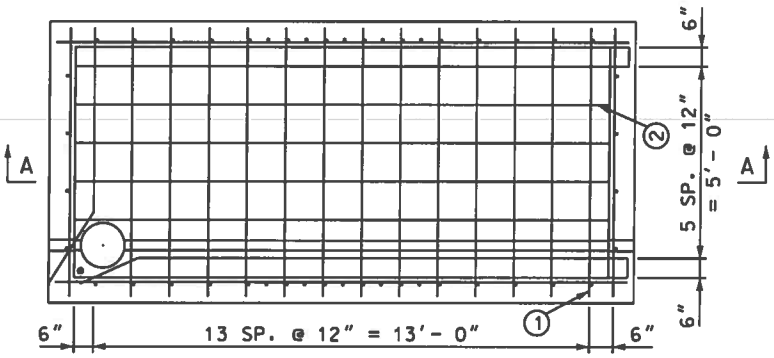

SECTION C - C

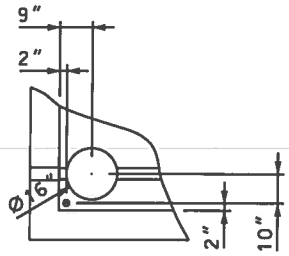

SEE NOTE 3

NOTES:

1. THE DISTANCE OF THE SHEETING TO INNER WALL OF MANHOLE IS 1 1/2" ALL AROUND.

DRAWN: DPJ	DVLPED: PWL DATE: 11-12-79	REVIEWED:RLH DATE: 11-28-11	APPRVD: JKP DATE: 11-28-11	NEXT REVIEW: 11-14	REV: A

PHI

DISTRIBUTION STANDARDS

6'-0" X 14'-0" MANHOLE (CAST IN PLACE)

1. D=
   FLUSH SDWK = 6" MINIMUM
   FLSUH RDWY = 9" MINIMUM
   RECESSED SDWK=18" MINIMUM
   RECESSED RDWY=21" MINIMUM

2. SP.=SPACES
   NUMBERS IN CIRCLE INDICATE RODS IN STEEL SCHEDULE.

3. INSTALL SUMP PIT AND GROUND ROD ON L.V. END OF MANHOLE PER DWGS 2-2-1096 AND 2-2-1060 FOR TRANSFORMER MANHOLES.

4. THE TRANSFORMER-TO-BUS TIE CONDUITS SHOULD LEAVE THE TRANSFORMER MANHOLE (2 HORIZONTAL, 3 OR 4 VERTICAL) WITH 3' OF COVER. THE CONDUITS SHOULD ENTER THE BUS MANHOLE NEAR A CORNER ON THE LONG WALL WITH THE TOP CONDUITS A MINIMUM OF 3' BELOW THE CEILING.

5. WHEN INSTALLING MANHOLES END TO END OR SIDE BY SIDE A MINIMUM OF 1' IS REQUIRED INSIDE WALL TO INSIDE WALL OF THE ABUTTING MANHOLES.

DRAWN: DPJ	DVLPED: PWL DATE: 11-12-79	REVIEWED:RLH DATE: 11-28-11	APPRVD: JKP DATE: 11-28-11	NEXT REVIEW: 11-14	REV: B

PHI

DISTRIBUTION STANDARDS

NOTES FOR 6'-0" X 14'-0" MANHOLE

FLOOR REINFORCING SCHEDULE		
FLOOR (6" THICK)		
ROD NO.	1	2
QUANTITY	14	6
SIZE	#3	#3
C/C	12"	12"
LENGTH	7'	14'

CONCRETE SCHEDULE
FLOOR: 56 CU. FT.
WALLS: 28 CU. FT.

MANHOLE WALLS REINFORCING SCHEDULE
(ALL WALLS ARE 8" THICK)

ROD NO.	3	4	5	6	7	8	9	10
DEPTH	6'- 6" DC							
QUANTITY	8	-	2	12	28	10	18	-
SIZE	#4	-	#5	#4	#5	#4	#6	-
C/C	18"	-	9"	12"	12"	12"	9"	-
LENGTH	6'- 9"	-	7'	7'	6'- 9"	6'- 9"	15'	-
DEPTH	8'-0" DC							
QUANTITY	8	-	6	12	24	10	22	-
SIZE	#4	-	#5	#4	#5	#4	#6	-
C/C	18"	-	9"	12"	12"	12"	9"	-
LENGTH	8'- 3"	-	7'	7'	8'- 3"	8'- 3"	15"	-
DEPTH	9'- 0" DC							
QUANTITY	8	-	10	12	28	10	24	-
SIZE	#4	-	#5	#4	#5	#4	#6	-
C/C	18"	-	9"	12"	12"	12"	9"	-
LENGTH	9'- 3"	-	7'	7'	9'- 3"	9'- 3"	15'	-
DEPTH	10'- 0" DC							
QUANTITY	8	-	12	12	28	10	28	-
SIZE	#4	-	#5	#4	#5	#4	#6	-
C/C	18"	-	9"	12"	12"	12"	9"	-
LENGTH	10'- 3"	-	7'	7'	10'- 3"	10'- 3"	15'	-
DEPTH	11'- 0" DC							
QUANTITY	8	-	14	12	28	10	18	28
SIZE	#4	-	#5	#4	#5	#4	#6	#4
C/C	18"	-	9"	12"	12"	12"	9"	9"
LENGTH	11'- 3"	-	7'	7'	11'- 3"	11'- 3"	15'	4'- 6"

(CONTINUED ON SHEET 4 OF 6)

DRAWN: DPJ	DVLPED: PWL DATE: 11-12-79	REVIEWED:RLH DATE: 11-28-11	APPRVD: JKP DATE: 11-28-11	NEXT REVIEW: 11-14	REV: A

PHI

DISTRIBUTION STANDARDS

REINFORCEMENT FOR 6' X 14' MANHOLE

MANHOLE WALLS REINFORCING SCHEDULE (ALL WALLS ARE 8" THICK)								
ROD NO.	3	4	5	6	7	8	9	10
DEPTH	12'- 0" DC							
QUANTITY	8	-	18	12	28	10	32	32
SIZE	#4	-	#5	#4	#5	#4	#6	#4
C/C	18"	-	9"	12"	12"	12"	9"	9"
LENGTH	12'- 3"	-	7'	7'	12'- 3"	12'- 3"	15'	4'- 6"

DRAWN: DPJ	DVLPED: PWL DATE: 11-12-79	REVIEWED:RLH DATE: 11-28-11	APPRVD: JKP DATE: 11-28-11	NEXT REVIEW: 11-14	REV: A

PHI

DISTRIBUTION STANDARDS

REINFORCEMENT FOR 6' X 14' MANHOLE

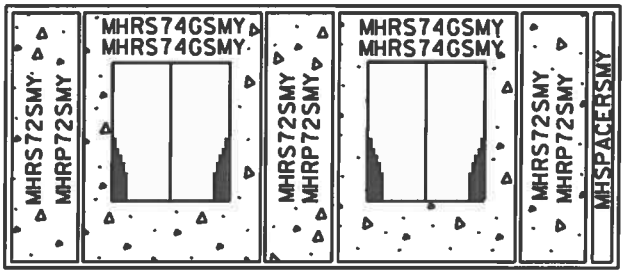

MH0614VS
MH0614VPS (SEE NOTE 2)

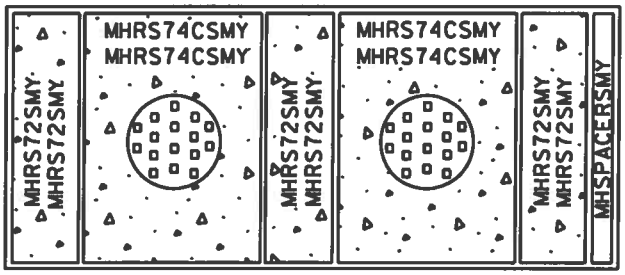

MH0614S MH0614SFS
MH0614PS MH0614SFPS (SEE NOTE 2)

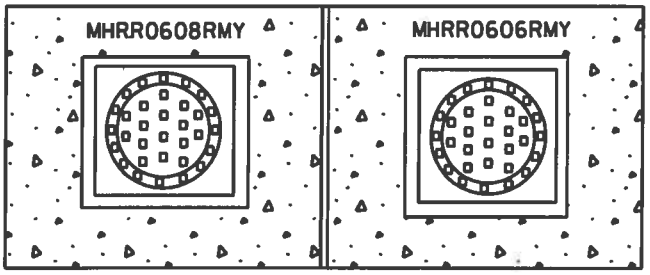

MH0614RR

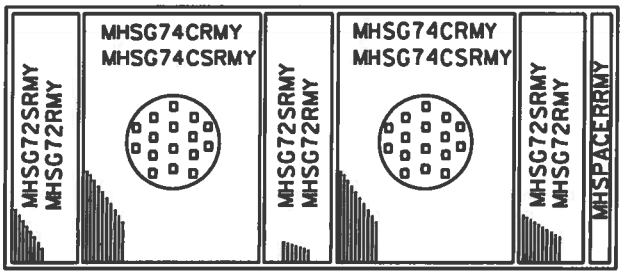

MH0614VR
MH0614VRS (SEE NOTE 1)

NOTES:

1. ENGINEERING ASSEMBLY MH0614VRS SHALL BE CALLED FOR WHEN A ROADWAY MANHOLE IS TO BE LOCATED IN THE SIDEWALK. COMPATIBLE UNITS MHSG74CRMY AND MHSG72RMY ARE REPLACED BY MHSG74CSRMY AND MHSG72SRMY FOR ENGINEERING ASSEMBLE MH0614VRS.

2. WHEN ENGINEERING ASSEMBLIES MH0614VPS, MH0614PS OR MH0614SFPS ARE REQUIRED THE SIDEWALK SLABS ARE REPLACED WITH THE PAVER PANS OF THE CORRESPONDING CONSTRUCTION.

DRAWN: DPJ	DVLPED: CEG DATE: 12-15-00	REVIEWED: RLH DATE: 11-28-11	APPRVD: JKP DATE: 11-28-11	NEXT REVIEW: 11-14	REV: A

PHI

DISTRIBUTION STANDARDS

6'-0" X 14'-0"
MANHOLE ROOFS

ENGINEERING ASSEMBLY BREAKDOWN FOR 6'- 0" X 14- 0" MANHOLES

QUANTITY									DESIGNATION	DESCRIPTION	REF. DWG.	STOCK NO.
2	2	2		2	2	2	2		MHC28MY	MH COVER 28" ML CO	2-2-0431	9721-0637
					2				MHDACMY	MH DBL ACT COVER ML CO	2-2-0434	9721-0640
					2				MHDAFRMY	MH DBL ACT COVER FR RDWY ML CO	2-2-0427	9721-0611
				1		1			MHRF0614RMY	MH RF FRAME 6X14 RDWY ML CO	2-2-1164	9721-0220
1	1	1	1				1	1	MHRF0614SMY	MH RF FRAME 6'X14 SDWK ML CO	2-2-1184	9721-0208
					1				MHRR0606RMY	MH RECESSED ROOF 6X6 RDWY ML CO	2-2-1141	9721-0564
					1				MHRR0608RMY	MH RECESSED ROOF 6X8 RDWY ML CO	2-2-1143	9721-0565
	3						3	3	MHRS72SMY	MH RF SLAB 7X2 SDWK ML CO	2-2-1177	9721-0648
	2						2		MHRS74CSMY	MH RF SLAB 7X4 SAC SDWK ML CO	2-2-1327	9721-0662
								2	MHRS74GSMY	MH RF SLAB 7X4 DR GRT SDWK ML CO	2-2-1327	9721-0663
3		3	3						MHRP72SMY	MH RF SLAB PAN 7X2 SDWK ML CO	2-2-1177	9721-0214
2		2							MHRP74CSMY	MH RF SLAB PAN 7X4 SAC SDWK ML CO	2-2-1327	9721-0223
			2						MHRP74GSMY	MH RF SLAB PAN 7X4 DRGRT SDWK ML CO	2-2-1327	9721-0221
				3					MHSG72SRMY	MH SLAB GRT 7X2 SP RDWY ML CO	2-2-1163	9721-0238
						3			MHSG72RMY	MH SLAB GRT 7X2 RDWY ML CO	2-2-1163	9721-0620
				2					MHSG74CSRMY	MH SLAB GRT 7X4 SAC SP RDWY ML CO	2-2-1351	9721-0659
						2			MHSG74CRMY	MH SLAB GRT 7X4 SAC RDWY ML CO	2-2-1351	9721-0658
				1		1			MHSPACERRMY	MH SPACER FOR RDWY MH ML CO	2-5-1386	9721-0668
1	1	1	1				1	1	MHSPACERSMY	MH SPACER FOR SDWK MH ML CO	2-5-1386	9721-0669
1	1				1				MHO614MY	MH 6X14X6.5 DC ML CO	0333	-
		1	1	1		1	1	1	MHO614VMY	MH 6X14X10 DC ML CO	0333	-

	DESCRIPTION
MHO614VS	MH 6X14 VENT SDWK TYPE
MHO614SFS	MH 6X14 SWITCH/FUSE SDWK TYPE
MHO614VR	MH 6X14 VENT RDWY TYPE
MHO614RR	MH 6X14 RECESSED RDWY TYPE
MHO614VRS	MH 6X14 VENT RDWY FOR SDWK TYPE
MHO614VPS	MH 6X14 VENT PAVERS SDWK TYPE
MHO614SFPS	MH 6X14 SWITCH/FUSE PAVERS SDWK TYPE
MHO614S	MH 6X14 SDWK TYPE
MHO614PS	MH 6X14 PAVERS SDWK TYPE

DRAWN: DPJ	DVLPED: CEG DATE: 12-15-00	REVIEWED:RLH DATE:11-28-2011	APPRVD: JKP DATE: 11-28-11	NEXT REVIEW: 11-14	REV: A

PHI

DISTRIBUTION STANDARDS

6'X14' MH ENGINEERING ASSEMBLIES BREAKDOWN

1352.1.6

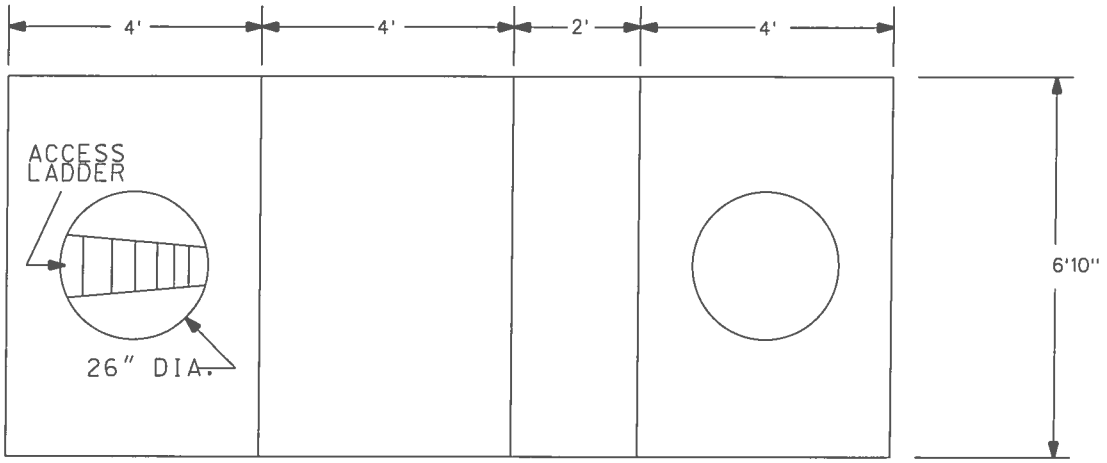

TOP VIEW: ROOF DETAIL

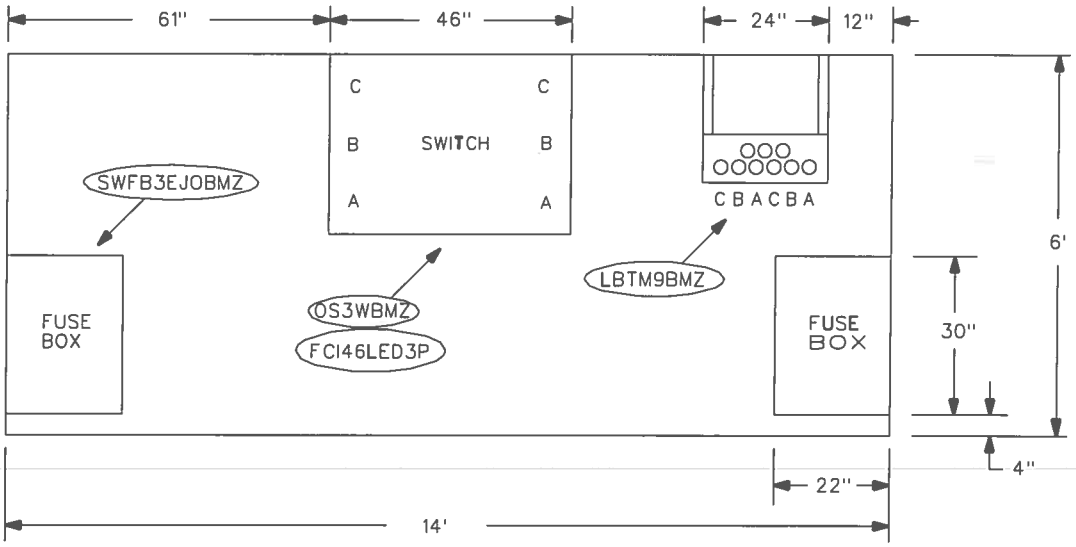

TOP VIEW: PLANNING DETAIL

NOTES:

LBTM9BMZ - LB TEST MODULE 9 WAY 8KV ML CA
OS3WBMZ - OIL SW 3 WAY 600A 8KV ML CA
SWFB3EJOBMZ - SW FUSE BOX 3 150E EJO 8KVMLCA
FCI46LED3P - FAULT CIRCUIT INDICATOR W/LED, 3PH

REV B: ADDITION OF FAULT CIRCUIT INDICATOR

DRAWN:KCW	DVLPED:RS DATE:03/24/88	REVIEWED:SAT DATE:01/25/13	APPRVD:JKP DATE:01/31/13	NEXT REVIEW:01/16	REV: B

PHI

DISTRIBUTION STANDARDS

ROOF DETAIL & TOP VIEW OF ONE 3-WAY SWITCH TWO FUSEBOX, 8KV SUBWAY INSTALLATION

1352.2.6

USE 4' HANGERSTOP BOLTS EVEN WITH BOTTOM MOUNTING BOLTS OF SWITCH

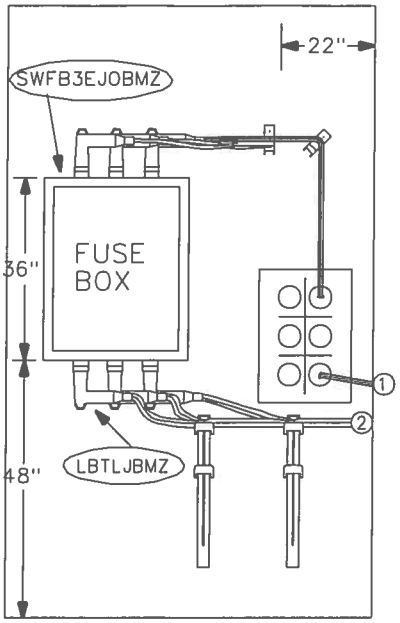

LEFT ELEVATION

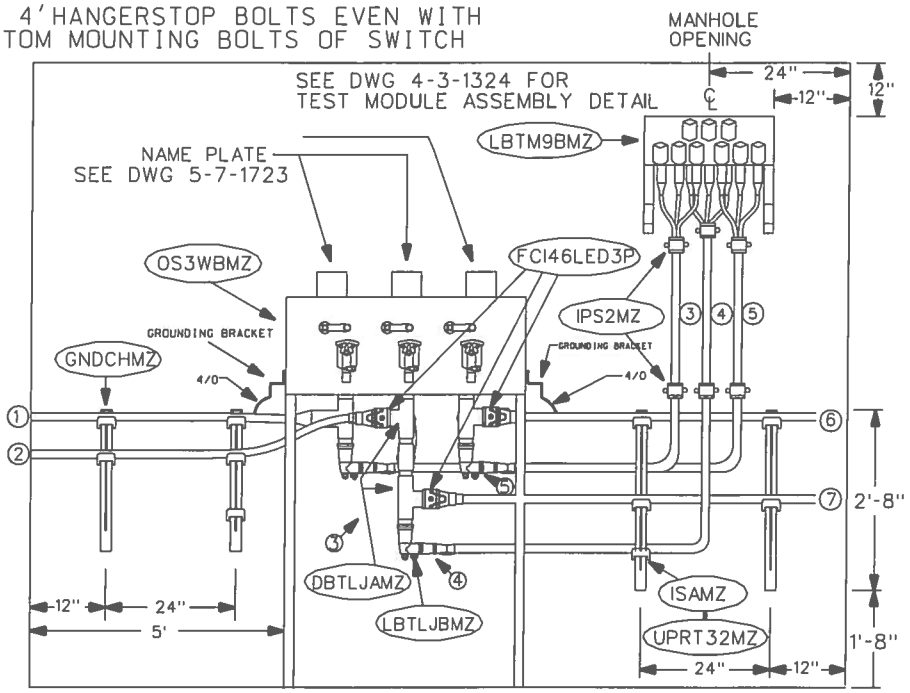

FRONT ELEVATION

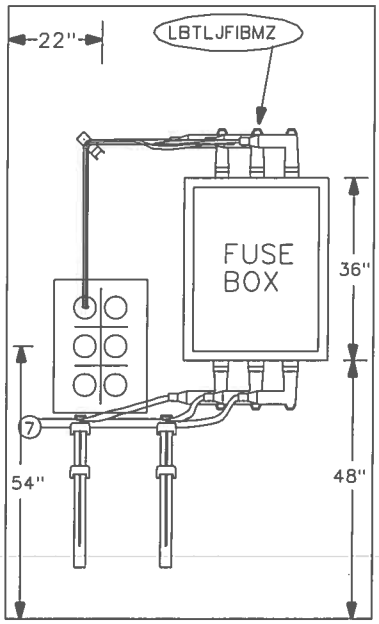

RIGHT ELEVATION

CABLE NOTES:

1) 600A FEEDER IN
2) 200A LOAD OUT
3) 200A TEST MODULE
4) 200A TEST MODULE
5) 200A TEST MODULE
6) 600A FEEDER OUT
7) 200A LOAD OUT

NO ATTACHMENTS ON THIS WALL (STANDARD DESIGN)

NOTE:

OPTIONAL DESIGN - IF CABLES MUST ENTER AND EXIT ON SAME WALL, DO NOT USE DUCT WORK ON RIGHT ELEVATION VIEW. WRAP CABLES "6" & "7" ALONG REAR ELEVATION VIEW USING APPROPRIATE SUPPORT MATERIAL AND EXIT VIA DUCT WORK ON LEFT ELEVATION VIEW.

REAR ELEVATION

EQUIPMENT NOTES:

CSDBLMZ - DOUBLE CABLE SUP. ML CA
CSSFMZ - CABLE SUP. SM FG ML CA
CSSGLMZ - SINGLE CABLE SUP. ML CA
DBTLJAMZ - DB TERM 600A 4/0 JKT 13KV MLCA
GNDCLMZ - GROUND WIRE CLAMP 1/0 ML CA
IPS2MZ -INS PORC SPOOL 2" ML CA
FCI46LED3P - FAULT CIRCUIT INDICATOR W/LED 3PH
ISAMZ - PORCELAN SADDLE INSULATR ML CA
LBBWIBMZ - LB BUSH WELL INS 8KV ML CA
LBTLJBMZ - LB TERM ELBW 1/0 JKT 8KV ML CA
LBTLJFIBMZ - LB TERM 1/0 JKT W/FI 8KV ML CA
LBTM9BMZ - LB TEST MODULE 9 WAY 8KV ML CA
OS3WBMZ - OIL SW 3 WAY 600A 8KV ML CA
SWFB3EJOBMZ - SW FUSE BOX 3-150E EJO 8KVMLCA
UPRT32MZ - 32" UPRIGHT CABLE SUPP ML CA

REV B: ADDITION OF FAULT CIRCUIT INDICATOR

DRAWN:KCW	DVLPED:RS DATE:10/03/07	REVIEWED:SAT DATE:01/25/13	APPRVD:JKP DATE:01/31/13	NEXT REVIEW:01/16	REV: B

PHI

DISTRIBUTION STANDARDS

ONE 3-WAY SWITCH 2 FUSEBOX 8KV SUBWAY INSTALLATION

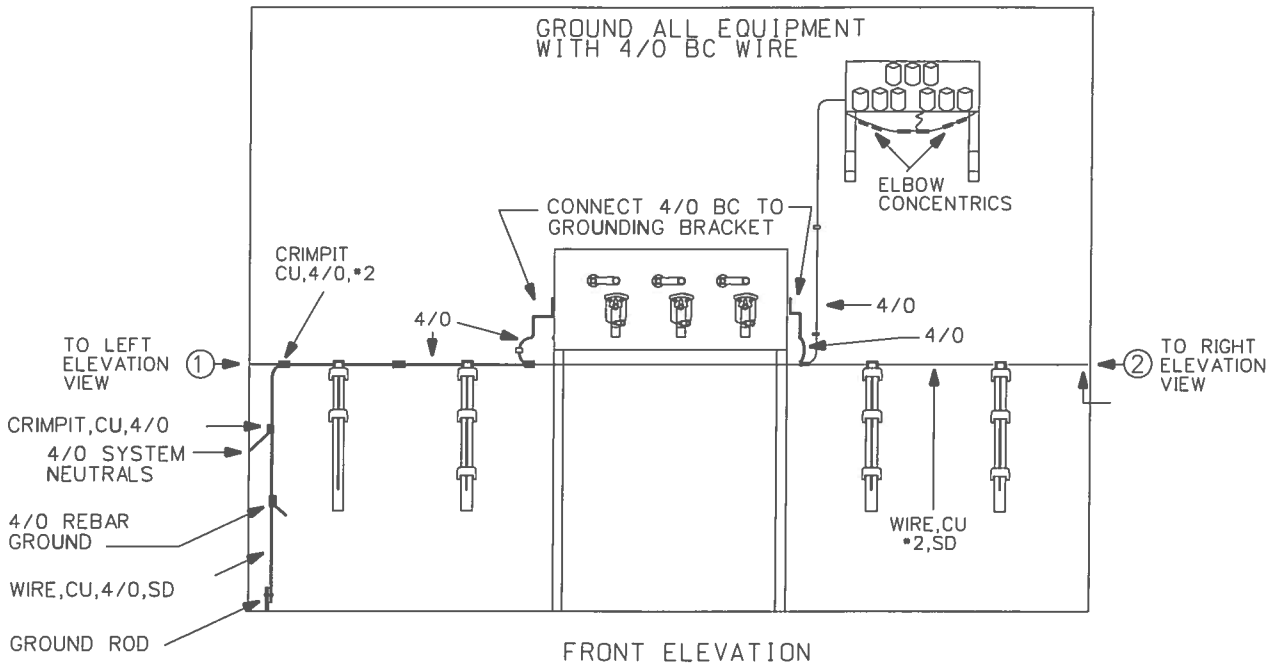

FRONT ELEVATION

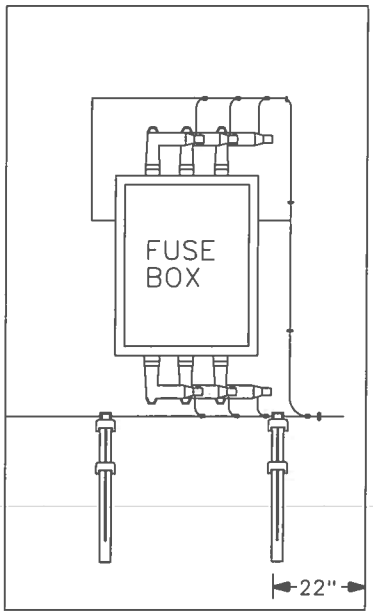

LEFT ELEVATION

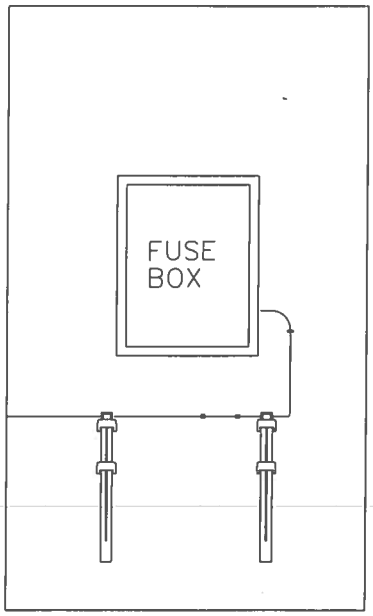

RIGHT ELEVATION

NOTE

NO GROUNDING ATTACHED TO REAR ELEVATION IN STANDARD DESIGN. IF CABLES ARE WRAPPED AROUND ON REAR ELEVATION, THEN GROUND ACCORDINGLY.

REV B: ADDITION OF FAULT CIRCUIT INDICATOR

DRAWN: KCW	DVLPED: RS DATE: 03/24/88	REVIEWED: SAT DATE: 01/25/13	APPRVD: JKP DATE: 01/31/13	NEXT REVIEW: 01/16	REV: B

PHI

DISTRIBUTION STANDARDS

GROUNDING DETAIL FOR ONE 3-WAY SWITCH TWO FUSEBOX 8KV SUBWAY INSTALLATION

1352.4.6

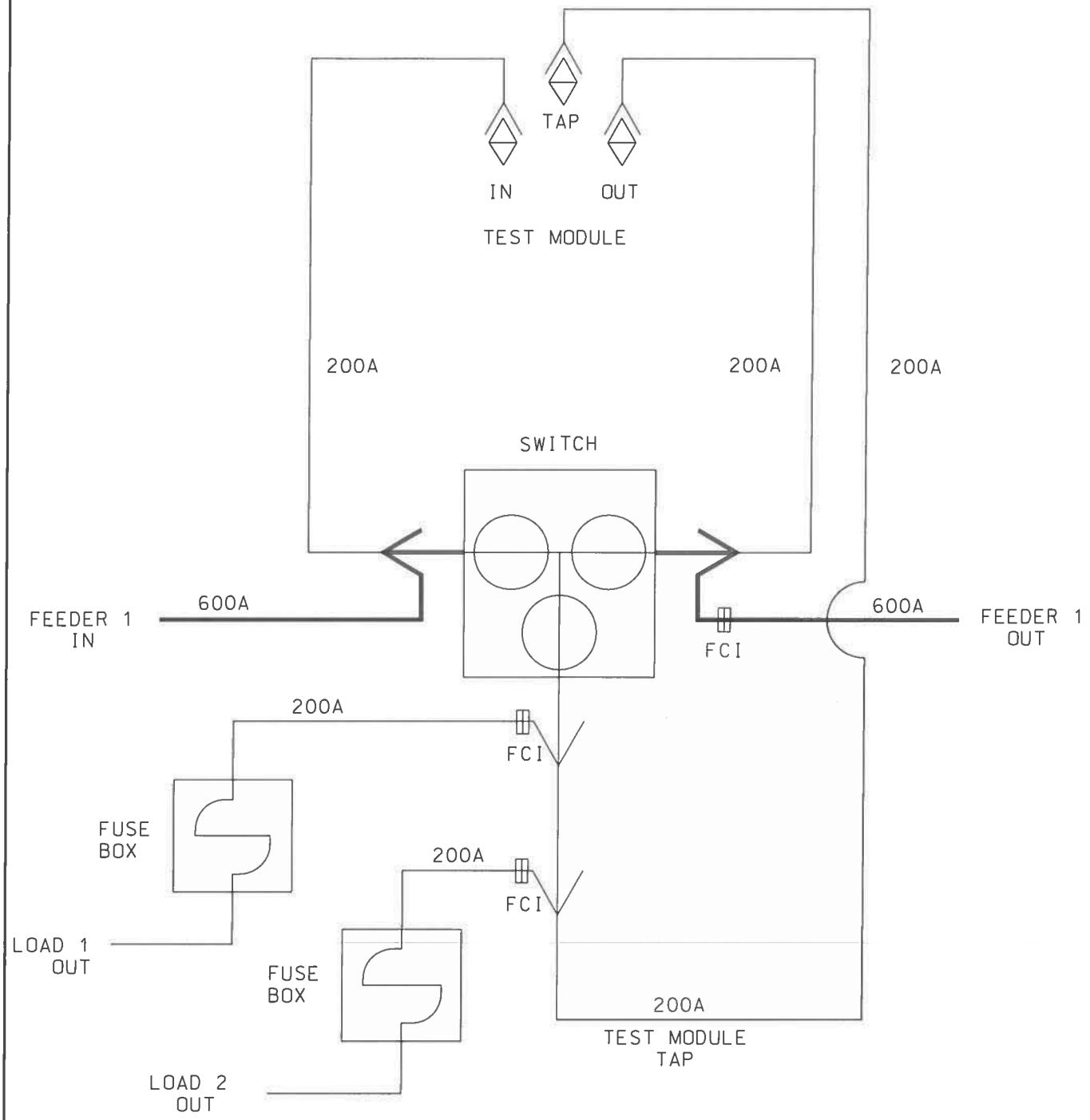

WIRING DIAGRAM

REV B: ADDITION OF FAULT CIRCUIT INDICATOR

DRAWN: KCW	DVLPED: RS DATE: 10/03/07	REVIEWED: SAT DATE: 01/25/13	APPRVD: JKP DATE: 01/31/13	NEXT REVIEW: 01/16	REV: B

PHI

DISTRIBUTION STANDARDS

ONE LINE SCHEMATIC FOR
ONE 3-WAY SWITCH TWO FUSEBOX,
8KV SUBWAY INSTALLATION

1352.5.6

ONE 3-WAY SWITCH, TWO FUSEBOX
13KV SWITCH HOLE SUBWAY INSTALLATION

INSTRUCTIONS

1. INSTALL UPRIGHTS, GROUND CLAMPS, CABLE SUPPORTS, SADDLE AND RING INSULATORS AS SHOWN ON SHEET 2.
2. CHECK OIL LEVEL ON SWITCHES VIA SIGHT GLASS BEFORE SETTING IN MANHOLE.
3. ATTACH LEGS TO BOTH SWITCHES.
4. MOUNT SWITCHES TO THE WALL AS SHOWN ON SHEETS 1 & 2.
5. LABEL SWITCHES AS SHOWN ON DRAWING 1326.
6. MOUNT FUSEBOXES ON END WALLS AS SHOWN ON SHEETS 1 & 2.
7. LABEL FUSEBOXES ACCORDING TO DRAWING 1325.
8. MOUNT TEST MODULES ON WALL LOCATION SHOWN ON SHEET 2.
9. LABEL TEST MODULES WITH FEEDER NUMBERS AND IDENTIFY PHASES AS SHOWN IN DRAWING 1324.
10. CONNECT 600A DEADBREAK TERMINATORS AND 600 KCM FEEDER CABLES TO SWITCH AS SHOWN ON SHEET 2. TAG WITH FEEDER NUMBER & PHASES.
11. IF THE IN-COMING & OUT-GOING FEEDER CABLES ENTER & LEAVE THE MANHOLE FROM THE SAME DUCT PILE, LOOP THE APPROPRIATE LEGS AROUND THE MANHOLE.
12. MOUNT 3* PHASE FAULT INDICATORS ON THE IN-COMING & OUT-GOING ELBOW TERMINATORS (SEE DWG 1332).
13. MOUNT INDICATOR DIALS ON TEST MODULE USING THE MOUNTING BRACKET BOLTS.(SEE DWG 1324)
14. TAG THE INDICATOR DIALS WITH FEEDER NUMBER AND INDICATE WHETHER IT IS THE IN-COMING OR OUT-GOING FEEDER CABLES.
15. TAG ALL IN-COMING AND OUT-GOING CABLES. (SEE CABLE IDENTIFICATION & TAGGING PROCEDURES)
16. CONNECT 600A DEADBREAK TERMINATORS WITH 1/0 CONCENTRIC NEUTRAL CABLES FROM THE SWITCH TO THE FUSEBOXES AND TAG PHASES ACCORDINGLY. (SEE DWG 1073)
17. CONNECT 200 A LOADBREAK TERMINATORS FROM THE SWITCHES TO THE TEST MODULES WITH 1/0 CONCENTRIC NEUTRAL CABLE.(SEE DWG 1073)
18. CONNECT 200 A LOADBREAK TERMINATORS WITH FAULT INDICATORS TO LOAD SIDE OF THE FUSEBOXES. (SEE DWG 1308)
19. BOND FUSEBOXES, MODULE & ALL CABLE SUPPORTS WITH #2 BARE COPPER CONDUCTOR.
20. CONNECT ALL CONCENTRIC NEUTRAL CABLE WITH THE #2 NEUTRAL.
21. GROUND THE SWITCH WITH 4/0 BARE COPPER CONDUCTOR AND CONNECT IT TO THE 4/0 REBAR GROUND, THE GROUND ROD, AND THE 4/0 SYSTEM NEUTRAL.
22. CONNECT THE DRAIN WIRES, SHIELD GROUND AND CONCENTRIC NEUTRAL GROUND OF EACH PHASE OF EACH SWITCH WAY WITH #2 BARE COPPER.
23. INTERCONNECT ALL BONDS, GROUNDS AND NEUTRALS WITH THE #2 MANHOLE GROUND AS SHOWN IN THE GROUNDING DETAIL ON SHEET 3.
24. SECURE ALL MAIN LINE FEEDER CABLES TO THEIR SADDLE INSULATORS WITH BLACK, LIGHT STABILIZED TIE WRAPS (STOCK # 1728-38-5).
25. CHECK SUMP PUMP TO ENSURE THAT IT IS WORKING.
26. INSTALL ROOF SLABS AS SHOWN ON SHEET 1.
27. INSTALL THE ACCESS LADDER IN MANHOLE OPENING (SEE SHEET 1).
28. INSTALL FAULT CIRCUIT INDICATORS ON FEEDER 1 OUT AND LOAD TAPS 1 & 2.

REV B: ADDITION OF FAULT CIRCUIT INDICATOR

DRAWN:KCW	DVLPED:RS DATE:03/24/88	REVIEWED:SAT DATE:01/25/13	APPRVD:JKP DATE:01/31/13	NEXT REVIEW:01/16	REV: B

PHI DISTRIBUTION STANDARDS

ONE 3-WAY SWITCH, TWO FUSEBOXES
13KV SWITCH HOLE SUBWAY INSTALLATION

1352.6.6

SW2FBSWIB

ENG. ASSEM. - ONE 3-WAY SWITCH, TWO FUSEBOX, 8KV INSTALLATION

CU DESIGN.	DESCRIPTION*	REF. DWG.
8	CSDBLMC	DOUBLE CABLE SUPPORT ML CAB	1063
6	CSSFMC	CABLE SUPPORT SMALL FBGL ML CAB	1063
16	CSSGLMC	SINGLE CABLE SUPPORT ML CAB	1063
3	DBBE600AMC	VBJ BUSH EXT 600A 13KV ML CAB	N/A
6	DBTLJAMC	DB TERM 600A 1/0 JKT 13KV ML CAB	N/A
6	IPS2MC	INS PORC SPOOL 2" ML CAB	1063
15	ISAMC	PORCELAN SADDLE INSULATR ML CAB	1063
6	LBBWIBMC	LB BUSH WELL INS 8KV ML CAB	N/A
6	LBTLJBMC	LB TERM ELBW 1/0 JKT 8KV ML CAB	N/A
1	LBTM9BMC	LB TEST MODULE 9 WAY 8KV ML CAB	N/A
1	OS3WBMC	OIL SW 3-WAY 600A 8KV ML CAB	1398
1	SETTRANSFY	SET TRANSFORMER - MANHOUR CO	N/A
2	SWFB3EJOBMC	SW FUSE BOX 3EJO 150E 8KV ML CAB	N/A
6	UPRT32MC	32 IN UPRIGHT CAB SUPP ML CAB	1063
3	FCI46LED3P	FAULT CIRCUIT INDICATOR W/ LED, 3P	1741

EA DESIGNATION:

SW2FBSWIB - ONE SW TWO FUSE BOX INST 8KV

* COMPATIBLE UNIT DESCRIPTIONS ABOVE MATCH THE DESCRIPTIONS FOUND IN THE COMPATIBLE UNITS SYSTEM CATALOG.

NOTE:

ALL CABLES ENTERING AND LEAVING THE MANHOLE WITH THEIR ASSOCIATED ELBOWS AND ADAPTERS ARE NOT INCLUDED IN THIS ENGINEERING ASSEMBLY. CALL FOR THEM IN SEPARATE COMPATIBLE UNITS.

ENGINEERING NOTES:

1. THE STANDARD MANHOLE FOR THIS INSTALLATION IS 6'W x 14'L x 10'D WITH A TOTALLY REMOVABLE ROOF. TWO 28" MANHOLE OPENINGS ARE REQUIRED.
2. THIS HOLE WILL CONTAIN ONLY THE FEEDERS THAT SUPPLY THE SWITCHES. NO OTHER FEEDERS ARE TO PASS THROUGH THIS MANHOLE.
3. ALL MAIN LINE FEEDER CABLES MUST ENTER THE MANHOLE IN THE CORNER OF THE SHORT WALL.
4. CHRONICALLY WET SWITCH HOLES ARE TO BE EQUIPPED WITH SUMP PUMPS.
5. DESIGN MAY BE ROTATED 180° TO FACILITATE VARIOUS CONDUIT ENTRANCES.
6. THIS STANDARD IS DESIGNED FOR SIDEWALK MANHOLES ONLY. ROADWAY INSTALLATIONS ARE NOT RECOMMENDED DUE TO DIFFICULTIES ASSOCIATED WITH ACCESS.
7. FOR FAULT CIRCUIT INDICATOR INSTALLATION, REFER TO DWG#1741.

REV B: ADDITION OF FAULT CIRCUIT INDICATOR

DRAWN:KCW	DVLPED:RS DATE:10/03/07	REVIEWED:SAT DATE:01/25/13	APPRVD:JKP DATE:01/31/13	NEXT REVIEW:01/16	REV: B

PHI

DISTRIBUTION STANDARDS

ENGINEERING ASSEMBLY AND ENGINEERING NOTES FOR ONE 3-WAY SWITCH TWO FUSEBOX 8KV

NOTES:
1. To be manufactured per PEPCO DWG #6-1-122
2. 5,000 psi Concrete at 28 days.
3. Reinforcing - ASTM 615 Grade 60.
4. Thickness:
   Walls - 6"
   Floor - 6"
4. Weight: 19,320 lbs.

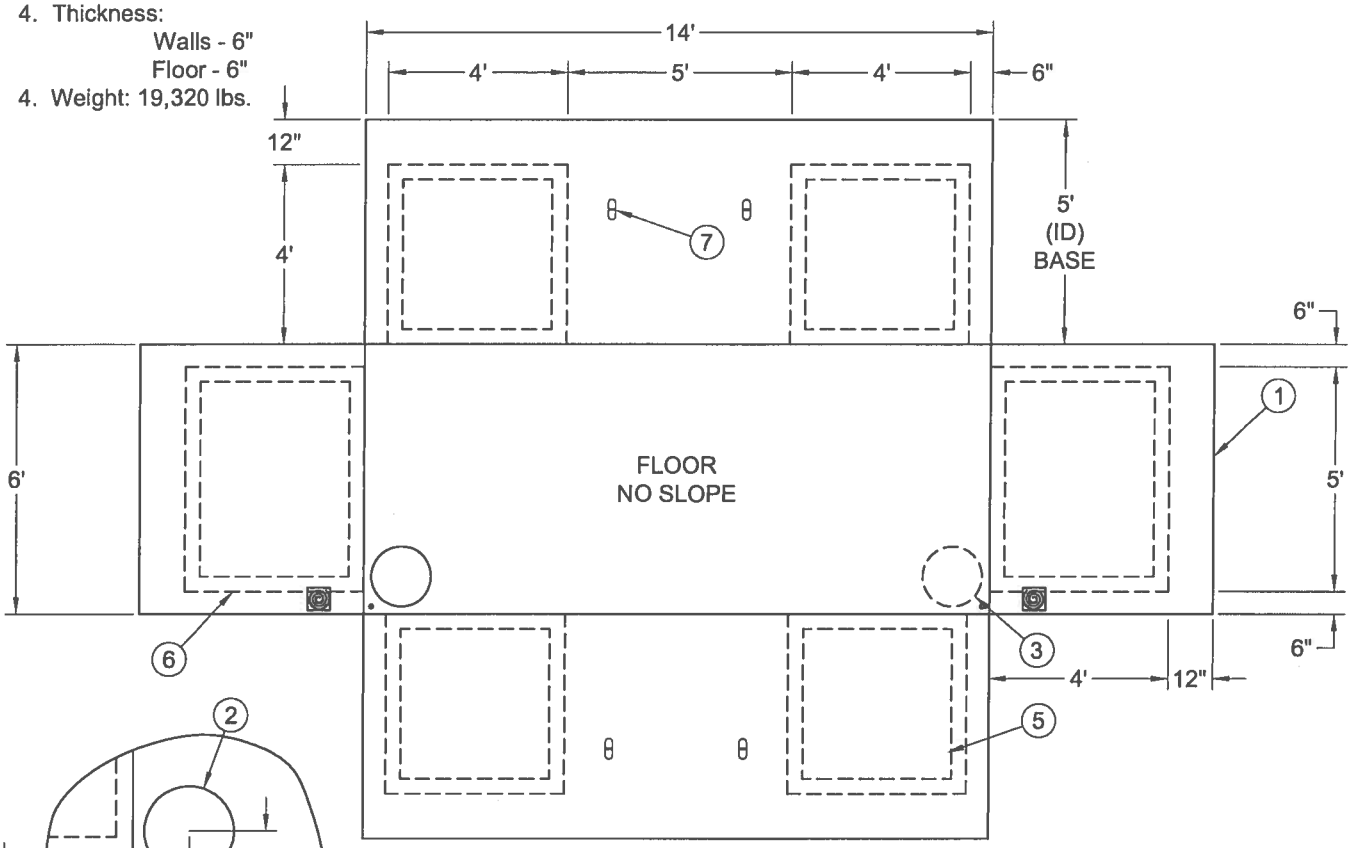

INTERIOR FOLD OUT VIEW
WALLS FOLD UP

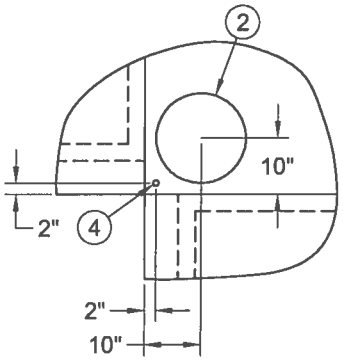

SUMP DETAIL - FLOOR

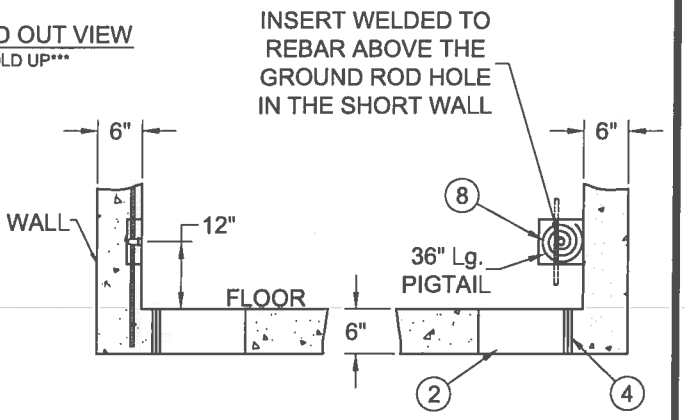

SIDE VIEW

END VIEW

END WALL DETAIL

LEGEND:

1. SHIPLAP CONSTRUCTION JOINT TO RISER UNIT. SEAL WITH CONSEAL CS-102 BUTYL RESIN.
2. 16" Ø SUMP HOLE THRU FLOOR.
3. 16" Ø x 4" DEEP SUMP (FLUSH AT TOP)
4. 1" Ø HOLE THRU FLOOR FOR GROUNDING ROD.
5. (4) 48"H x 48"W x 3" T KNOCKOUT PANELS ON LONG WALL.
6. (2) 48"H x 60"W x 3" T KNOCKOUT PANELS ON SHORT WALL.
7. (4) 6" UTILITY ANCHORS IN WALLS FOR LIFTING.
8. 6" x 6" x 2" RECESS w/#4/0 STANDARD COPPER TINNED WIRE CLAMPED TO MAT SHEET 36" LONG EXPOSED PIGTAIL RECESS TO BE PATCHED OVER PRIOR TO SHIPMENT

NPCA CERTIFIED PLANT

GILLESPIE PRECAST LLC
1-800-638-6884
www.gillespieprecast.com

6'-0" x 14'-0" Precast Manhole Base

DRAWN BY:		DWG.:
JHP		2 of 2
SCALE: 1/4" = 1'-0"	DATE: 3/28/12	PRODUCT NO.: B72X168X5-3.12

NOTES:
1. To be manufactured per PEPCO DWG #6-1-122
2. 5,000 psi Concrete at 28 days.
3. Reinforcing - ASTM 615 Grade 60.
4. Thickness: Walls - 6"
5. Weight: 12,667 lbs.

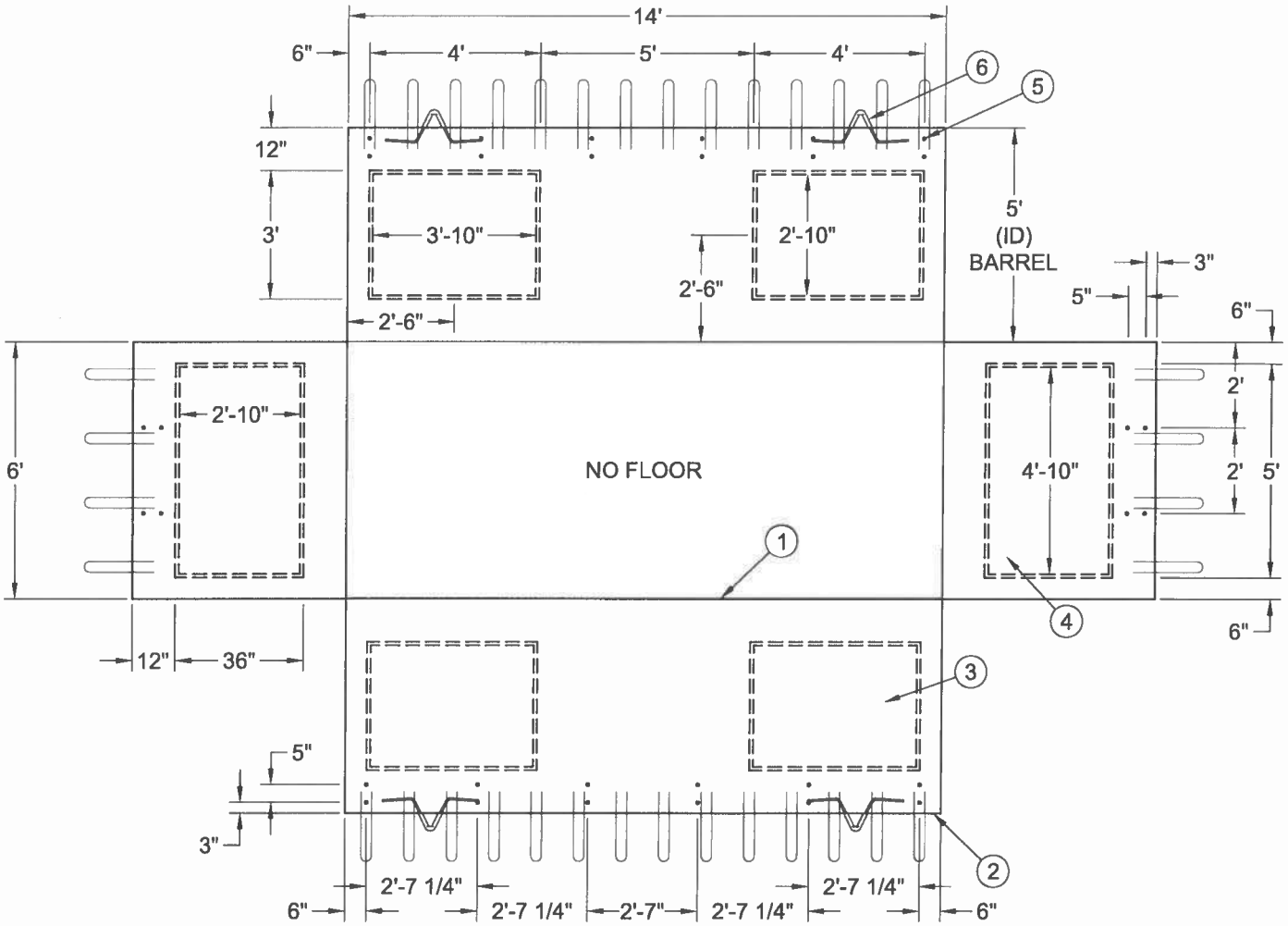

INTERIOR FOLD OUT VIEW

WALLS FOLD UP

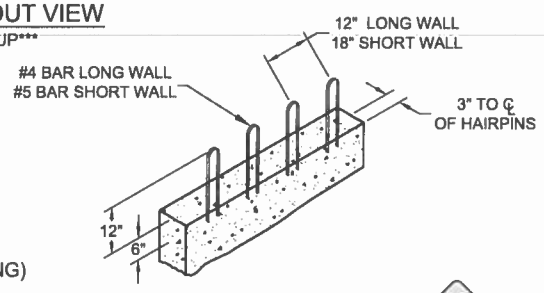

TYPICAL SECTION

LEGEND:

1. SHIPLAP CONSTRUCTION JOINT TO BASE UNIT. SEAL WITH CONSEAL CS-102 BUTYL RESIN.
2. FLAT JOINT ON TOP w/HAIRPIN REBAR AT 12" CENTERS FOR C.I.P. TOP (SEE DETAIL).
3. (4) 34"H x 46"W x 3" T KNOCKOUT PANELS ON LONG WALL (CLEAR OPENING)
4. (2) 34"H x 58"W x 3" T KNOCKOUT PANELS ON SHORT WALL (CLEAR OPENING)
5. (32) PA INSERT 1/2" DIA. INSERT.
6. (4) PA INSERTS PI-U1 PULLING IRON IN WALL FOR LIFTING.

NPCA CERTIFIED PLANT

GILLESPIE PRECAST LLC

1-800-638-6884
www.gillespieprecast.com

6'-0" x 14'-0" Precast Manhole Riser

DRAWN BY:	DWG.:	
JHP	1 of 2	
SCALE: 1/4" = 1'-0"	DATE: 2/27/09	PRODUCT NO.: R72X168X5-2.09

2-2-0423.1.3

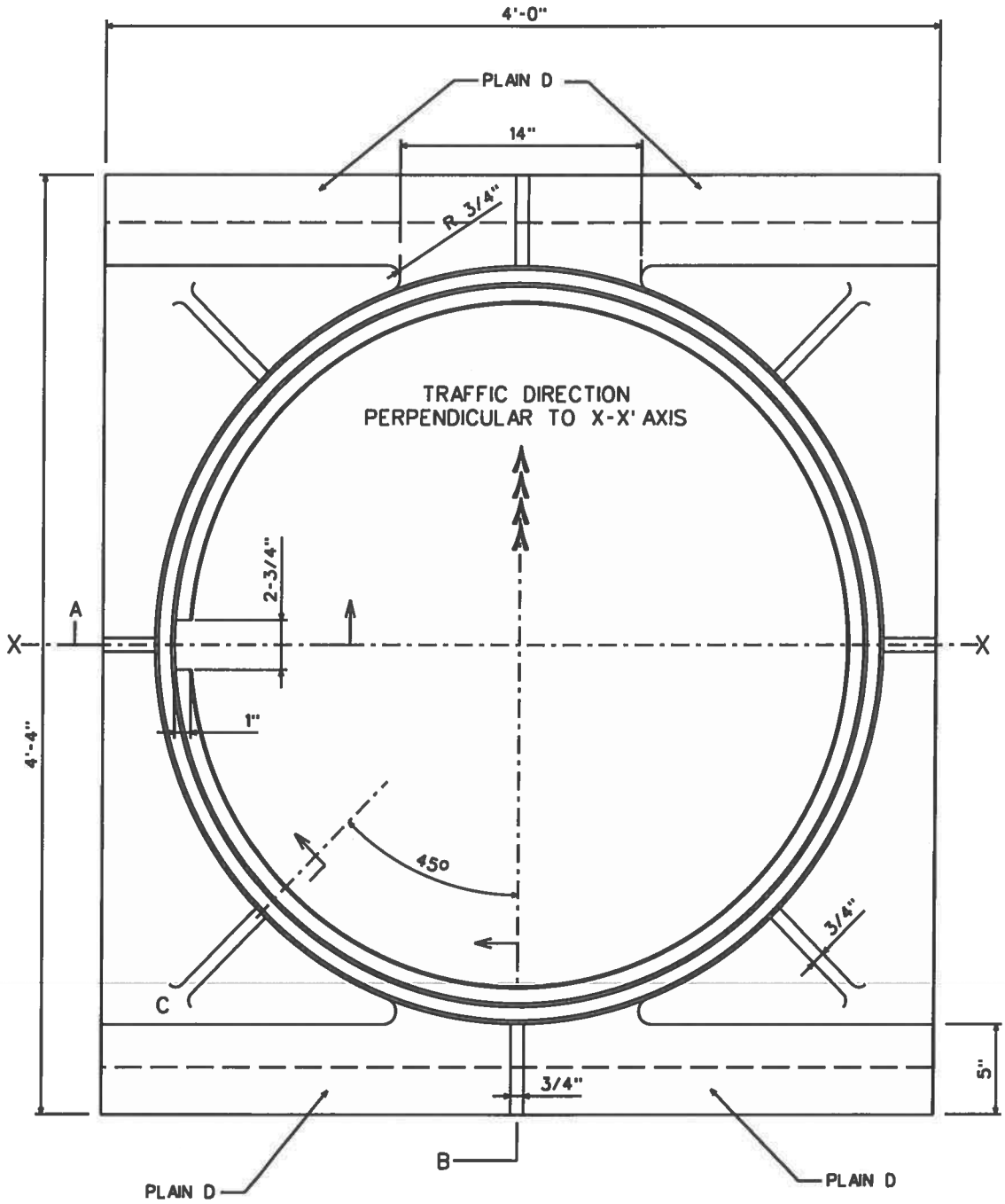

PLAN VIEW

SEE NOTES SHT. 3 :

DRAWN: AVI	DVLPED: JR	DATE: 4/5/02	REVIEWED: TWM	DATE: 9/9/04	APPRVD: MDW	DATE: 02-20-08	NEXT REVIEW: 02-11	REV: A

PHI PEPCO

POWER DISTRIBUTION STANDARDS

40" MANHOLE COVER FRAME FOR DOUBLE COVER SIDEWALK TYPE

...\DGN\2-2-0423_1-3.dgn 3/27/2008 5:35:58 PM

2-2-0423.2.3

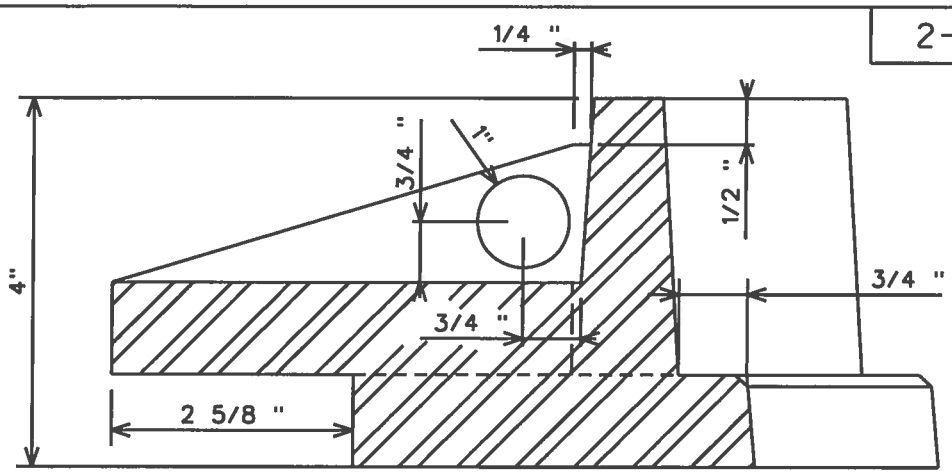

SECTION B - B

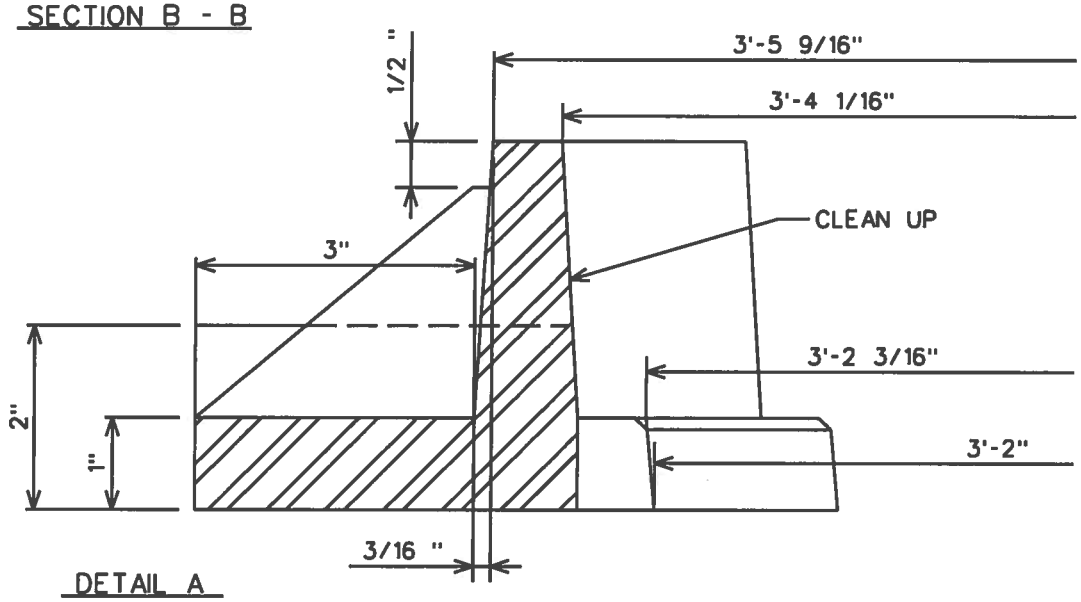

DETAIL A

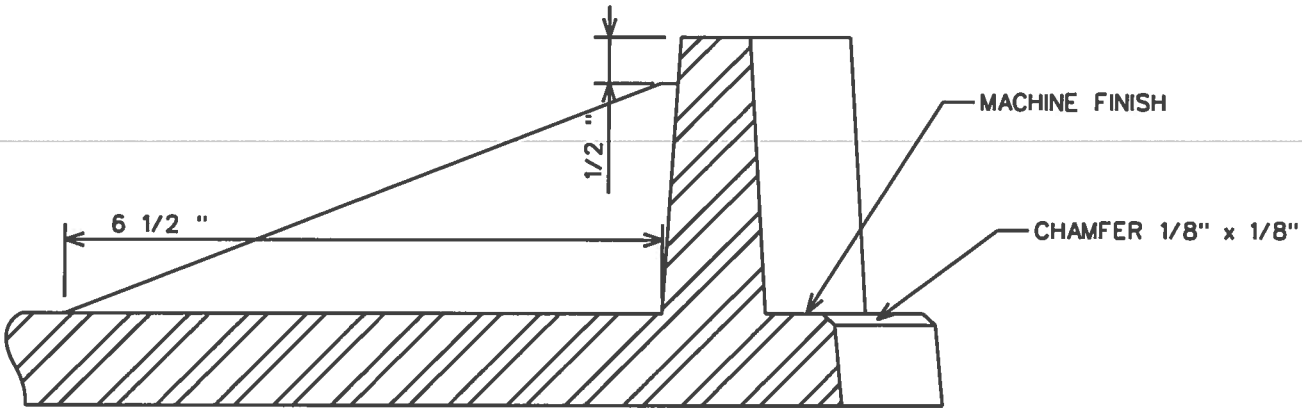

SEE NOTES SHT. 3 :

SECTION A - A

DRAWN: AVI	DVLPED: JR DATE: 4/5/02	REVIEWED: TWM DATE: 9/9/04	APPRVD: MDW DATE: 02-20-08	NEXT REVIEW: 02-11	REV: A

PHI PEPCO

POWER DISTRIBUTION STANDARDS

40" MANHOLE COVER FRAME FOR DOUBLE COVER SIDEWALK TYPE

...\DGN\2-2-0423_2-3.dgn 3/27/2008 5:41:03 PM

NOTES:

1: ALL CASTING SHALL CONFORM TO STANDARD SPECIFICATIONS FOR GRAY IRON CASTINGS A.S.T.M. DESIGNATION A-48 CLASS 25 LATEST REVISIONS

2: STOCK NO. 9721-0606 SHALL APPEAR ON THE CASTING. APPROXIMATE WEIGHT 377 LBS.

3: PLAIN D SHALL NOT BE WARPED 1/4"

4: EACH CASTING SHALL BE IDENTIFIED WITH THE MANUFACTURER'S NAME OR LOGO

5: CASTINGS SHALL BE FREE FROM SAND OR BLOW HOLES AND SHARP EDGES.

6: WITH EXCEPTION ONLY TO ANY NOTED TOLERANCES. NO DIMENSION SHALL EXCEED 1/16 /FT.

7. REV A. CHANGE DWG. FORMAT & CHANGE STOCK No's FOR WMIS.

DRAWN:AVI	DVLPED:JR DATE:04-5-02	REVIEWED:TWM DATE:9/9/04	APPRVD:MDW DATE:02-20-08	NEXT REVIEW: 02-11	REV: A

PHI PEPCO

POWER DISTRIBUTION STANDARDS

40"MANHOLE COVER FRAME FOR DOUBLE COVER SIDEWALK TYPE

2-2-0427.1.2

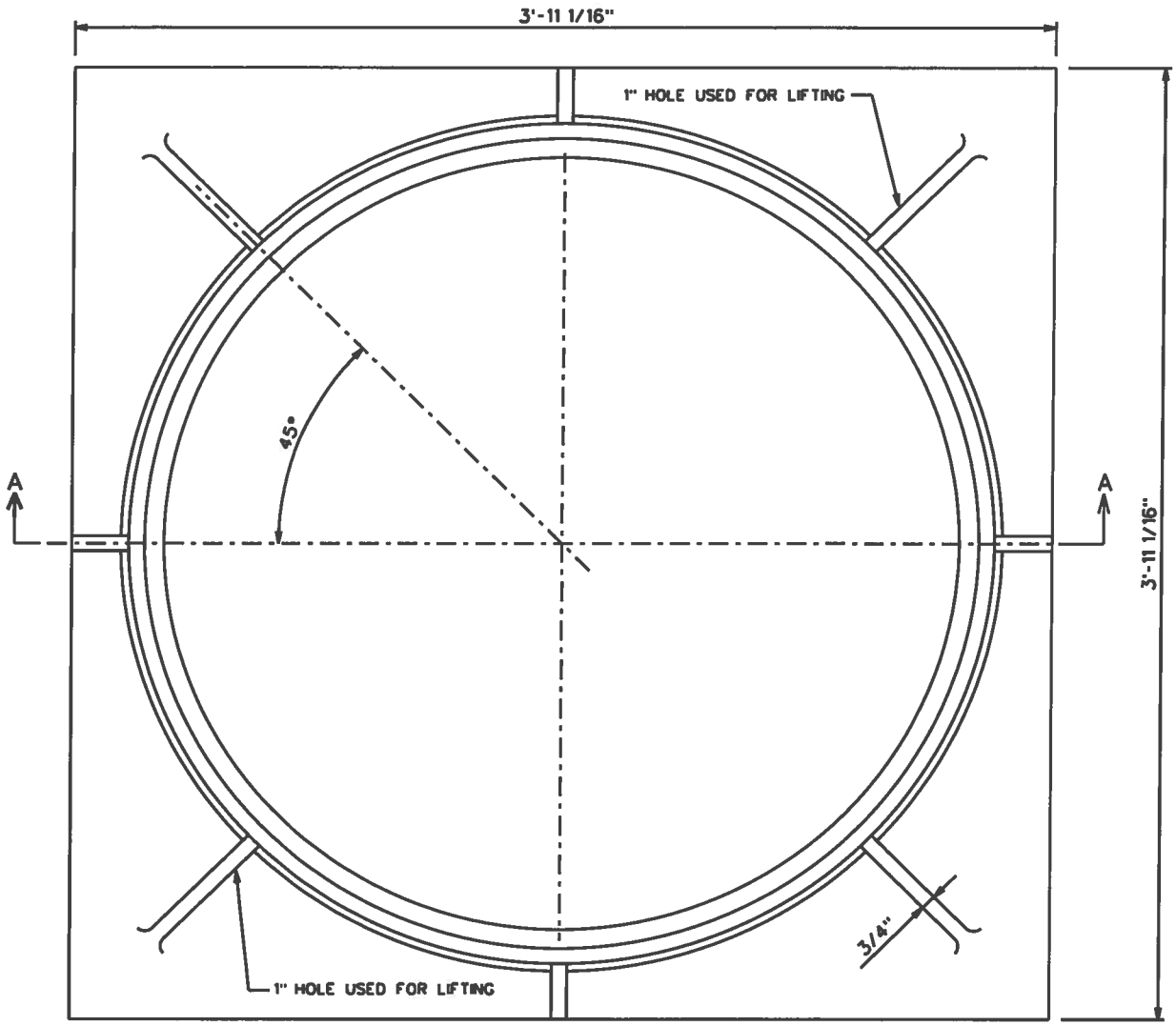

PLAN VIEW

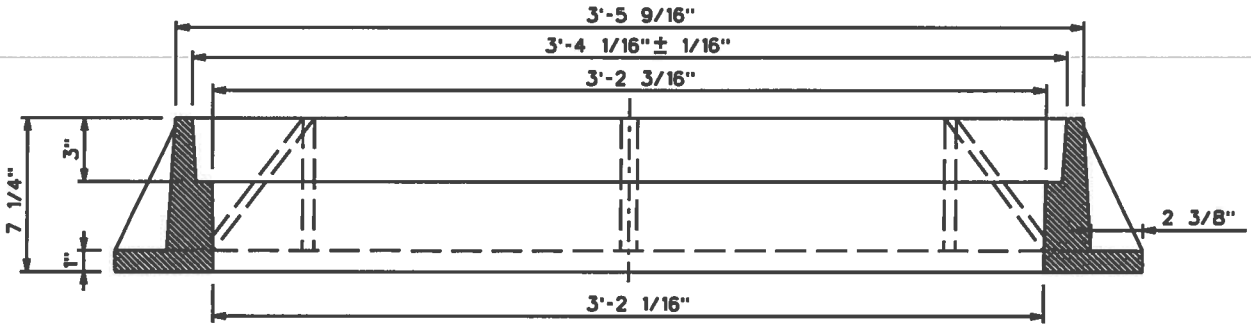

SECTION A - A

NOTES: SEE PAGE 2

DRAWN: AVI	DVLPED: JR	DATE: 04-11-02	REVIEWED: TWM	DATE: 9/13/04	APPRVD: MDW	DATE: 02-20-08	NEXT REVIEW: 02-11	REV: A

PHI PEPCO

POWER DISTRIBUTION STANDARDS

40" MANHOLE COVER FRAME FOR DOUBLE COVER ROADWAY TYPE

...\DGN\2-2-0427_1-2.dgn 4/3/2008 10:46:01 AM

2-2-0427.2.2

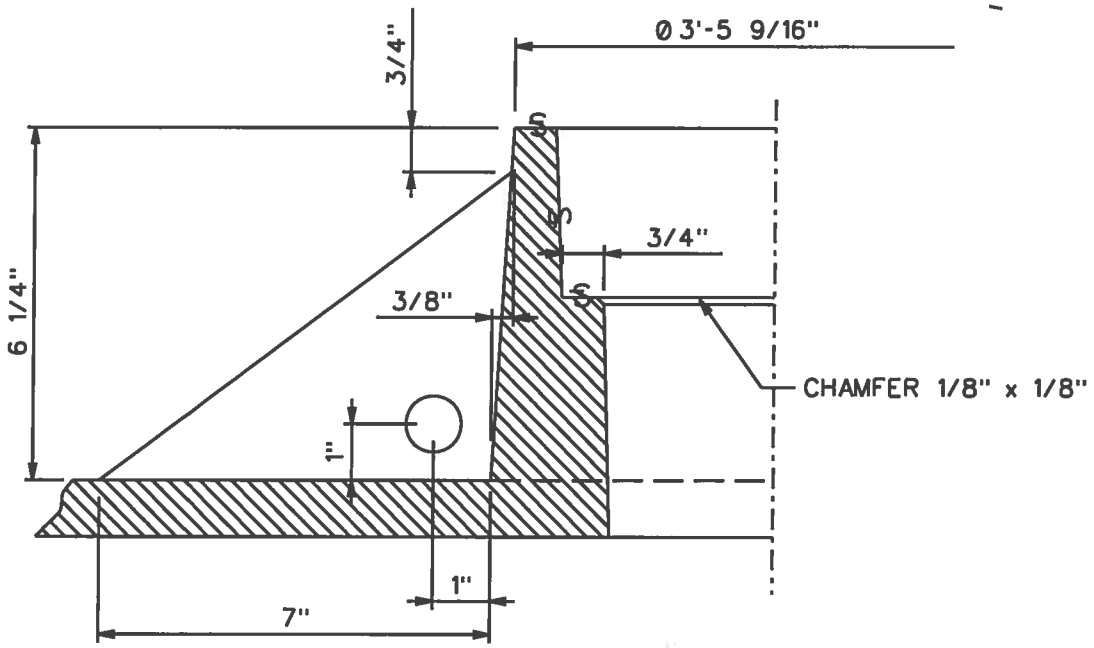

DETAIL " A "

NOTES

1: ALL CASTING SHALL CONFORM TO STANDARD SPECIFICATIONS FOR GRAY IRON CASTINGS A.S.T.M. DESIGNATION A-48 OR LATEST REVISIONS .

2: STOCK NO. 9721-0611 SHALL APPEAR ON THE CASTING. APPROXIMATE WEIGHT 598LBS.

3: S MACHINE FINISH.

4: EACH CASTING SHALL BE IDENTIFIED WITHTHE MANUFACTURER'S NAME OR LOGO

5: CASTINGS SHALL BE FREE FROM SAND OR BLOW HOLES AND SHARP EDGES.

6: WITH EXCEPTION ONLY TO ANY NOTED TOLERANCES, NO DIMENSION SHALL EXCEED ± 1/16" / FT.

7: REV A: CHANGE DWG FORMAT AND CHANGE STOCK No's FOR WMIS

COMPATIBLE UNIT 40" MANHOLE COVER FRAME FOR DOUBLE COVER ROADWAY TYPE

QTY	STOCK#	DESCRIPTION	
1	9721-0611	FRAME 40" MH COVER DOUBLE ACTING ROADWAY	EA
	DESIGNATION	DESCRIPTION	
	MHDAFRMY	MH DA COV FRAME 40" RDWY ML CO	

DRAWN: AVI	DVLPED: JR	DATE: 04-11-02	REVIEWED: TWM	DATE: 9/13/04	APPRVD: MDW	DATE: 02-20-08	NEXT REVIEW: 02-11	REV: A

PHI PEPCO

POWER DISTRIBUTION STANDARDS

40" MANHOLE COVER FRAME FOR DOUBLE COVER ROADWAY TYPE

...\DGN\2-2-0427_2-2.dgn 4/3/2008 10:50:24 AM

2-2-0434.1.2

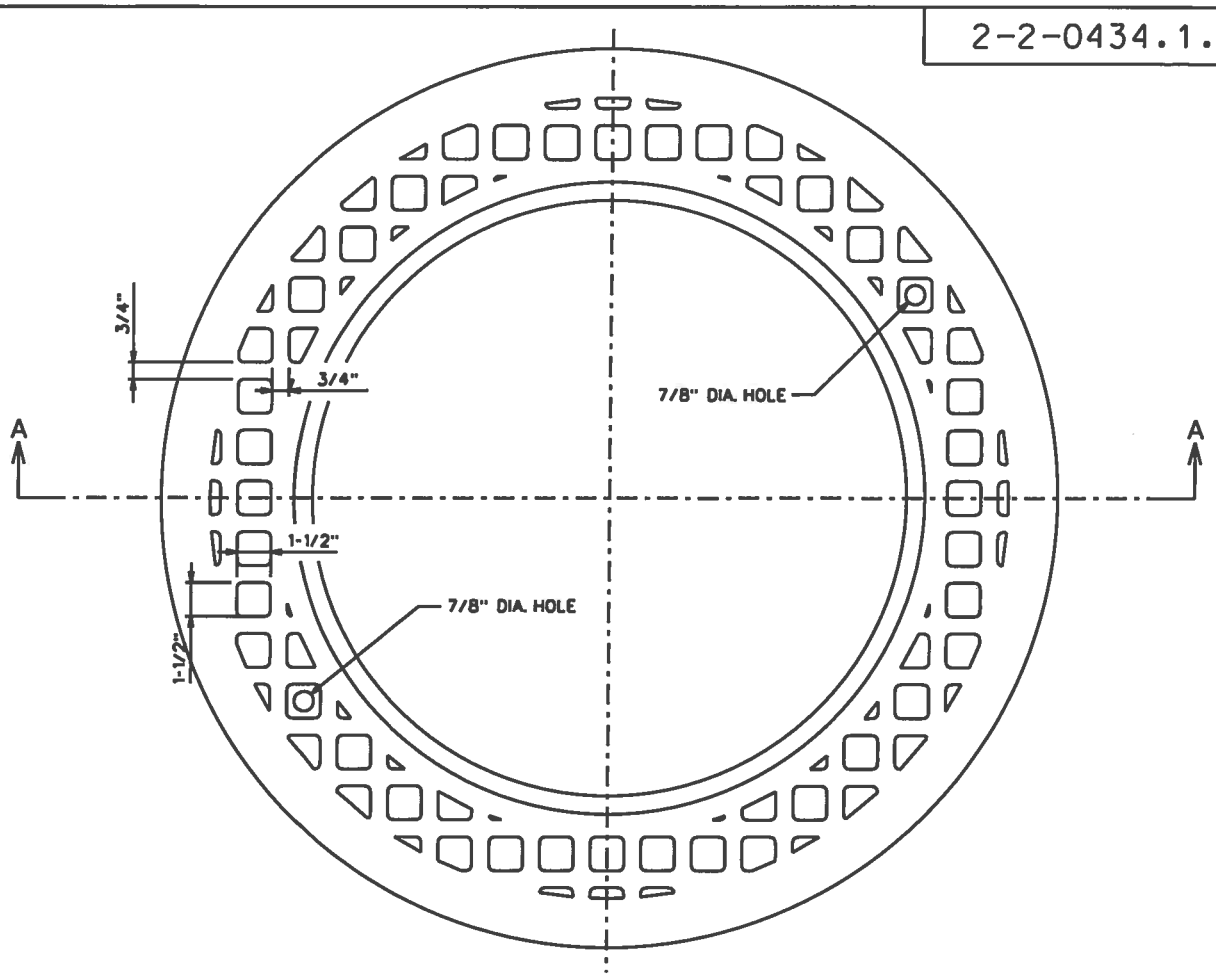

TOP VIEW

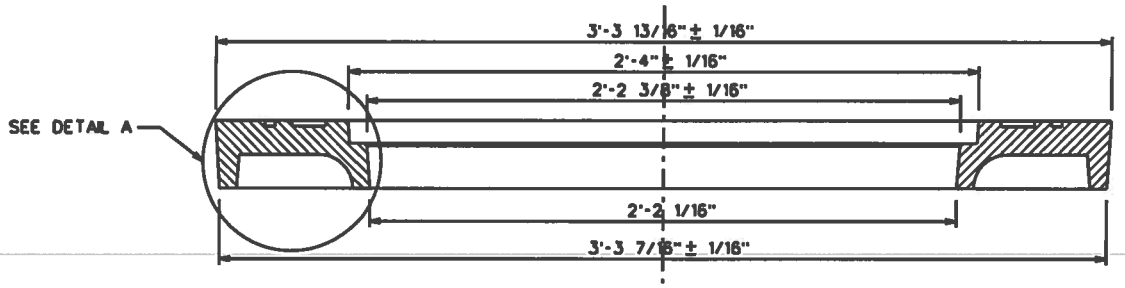

SECTION A-A

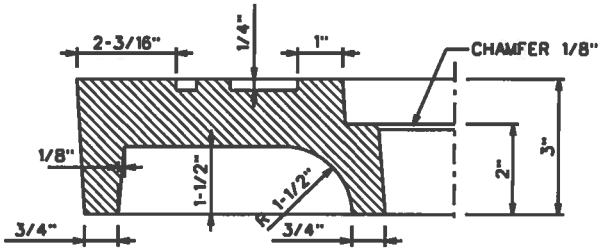

DETAIL A

NOTES:
SEE PAGE 2
REV C: CHANGED DWG FORMAT.

DRAWN: AVI	DVLPED: GBT DATE: 03-17-88	REVIEWED:CEG DATE:12-17-90	APPRVD: MDW DATE:02-21-08	NEXT REVIEW: 02-11	REV: C

PHI PEPCO

POWER DISTRIBUTION STANDARDS

40" MANHOLE RING COVER

...\DGN\2-2-0434_1-2.dgn 4/3/2008 4:43:19 PM

2-2-0434.2.2

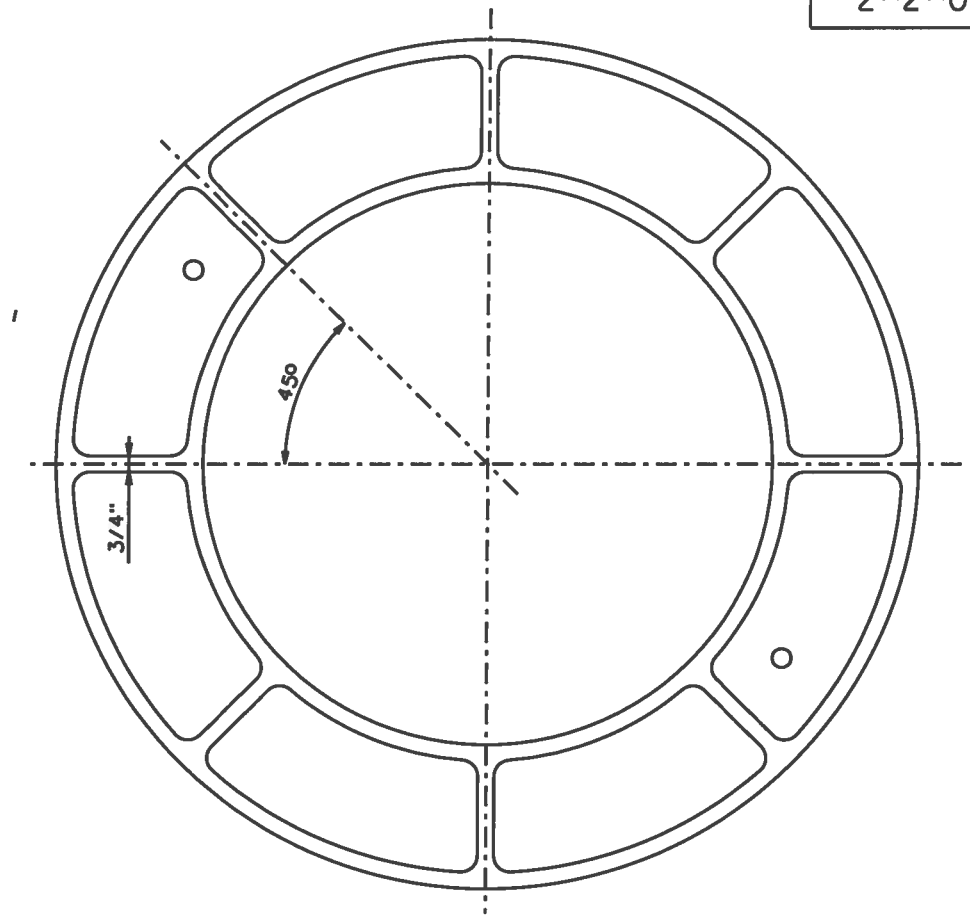

BOTTOM VIEW

1: ALL CASTING SHALL CONFORM TO STANDARD SPECIFICATIONS FOR GRAY IRON CASTINGS A.S.T.M. DESIGNATION A-48 OR LATEST REVISIONS.
2: STOCK NO. 9721-0640 SHALL APPEAR ON THE CASTING. APPROXIMATE WEIGHT 340 LBS.
3: S MACHINE FINISHED.
4: EACH CASTING SHALL BE IDENTIFIED WITHTHE MANUFACTURER'S NAME OR LOGO
5: CASTINGS SHALL BE FREE FROM SAND OR BLOW HOLES AND SHARP EDGES.
6: WITH EXCEPTION ONLY TO ANY NOTED TOLERANCES, NO DIMENSION SHALL EXCEED ± 1/16" / FT.
7: MANUFACTURER SHALL VERIFY THAT THE RING COVER IS DESIGNED FOR H20 LOADING.
8: SEE DWG. • 2-2-0431 FPR 28" ROADWAY MANHOLE COVER.

COMPATIBLE UNIT 40" MANHOLE RING COVER			
QUANTITY	STOCK•	DESCRIPTION	
1	9721-0640	MH, RING COVER 40"	EA
1	9721-0637	MH, COVER RDWY 28"	EA
	DESIGNATION		
	MHDACMY	MH DA COVER 40" W/RING ML 33KV	

REV C: CHANGED DWG FORMAT.

DRAWN: AVI	DVLPED: GBT DATE:03-17-88	REVIEWED:CEG DATE:12-17-90	APPRVD:MDW DATE:02-21-08	NEXT REVIEW: 02-11	REV:C

PHI PEPCO

POWER DISTRIBUTION STANDARDS

40" MANHOLE RING COVER

...\DGN\2-2-0434_2-2.dgn 4/3/2008 4:44:55 PM

2-2-1081.1.2

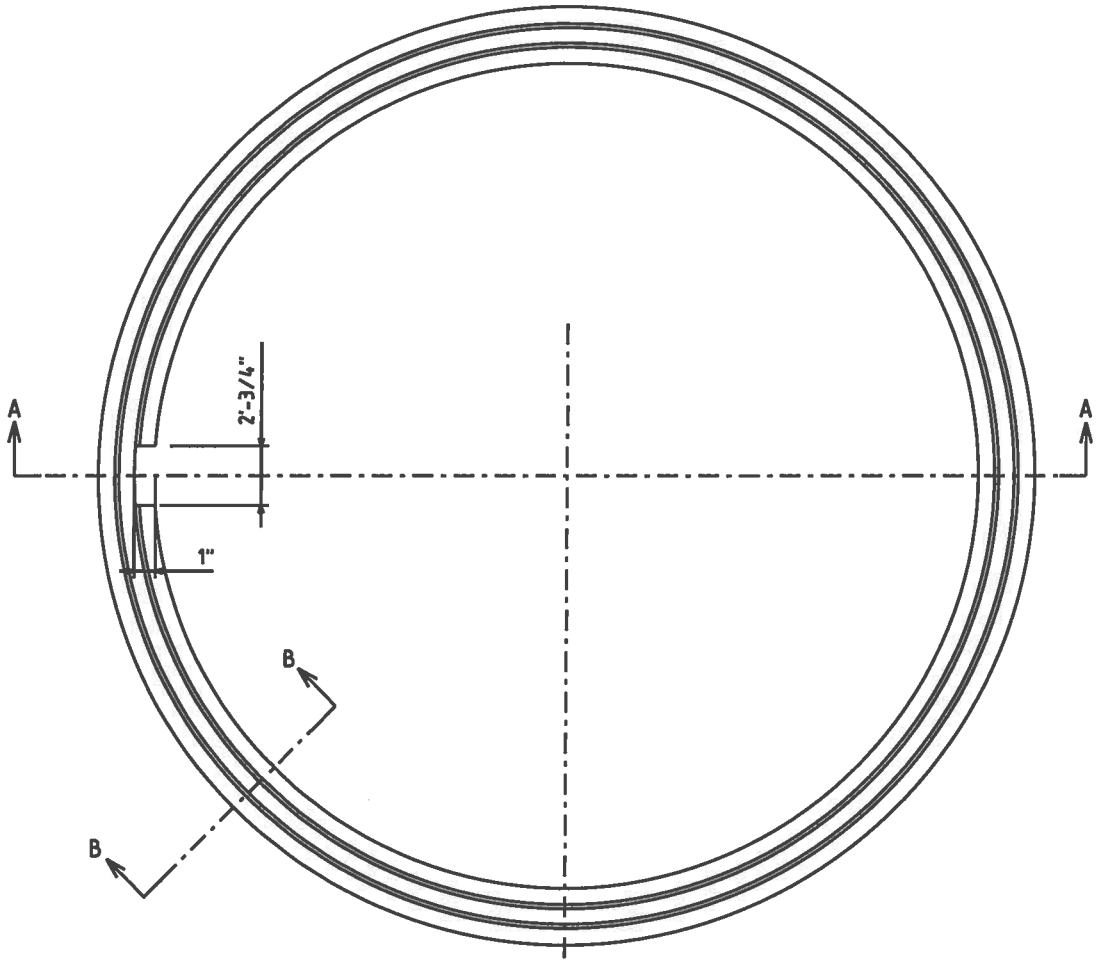

PLAN VIEW

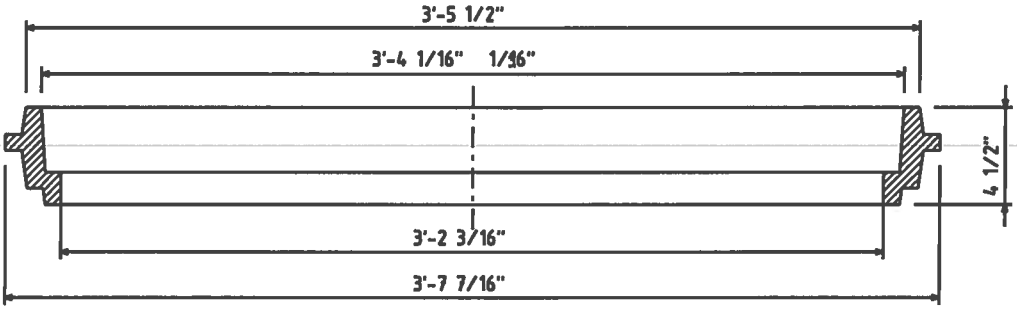

SECTION A-A

NOTES SEE PAGE 2

REV A CHANGED DWG FORMAT

DRAWN: AVI	DVLPED: JR DATE: 04-05-02	REVIEWED: RHM DATE: 04-05-02	APPRVD: MDW DATE: 02-21-08	NEXT REVIEW: 02-08	REV: A

PHI PEPCO

POWER DISTRIBUTION STANDARDS

40" MANHOLE COVER RING FRAME FOR DOUBLE COVER SIDEWALK TYPE

...\DGN\2-2-1081_1-2.dgn 4/3/2008 5:20:43 PM

2-2-1081.2.2

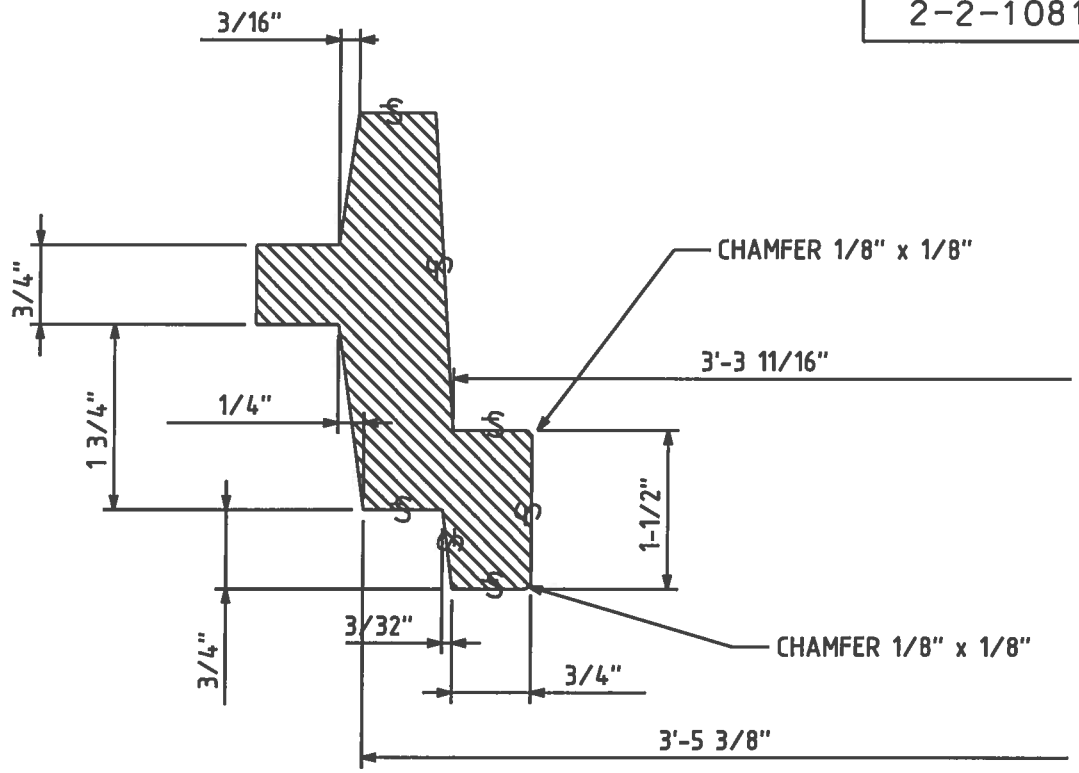

SECTION B-B

NOTES:

1. ALL CASTING SHALL CONFORM TO STANDARD SPECIFICATIONS FOR GRAY IRON CASTINGS A.S.T.M. DESIGNATION A-48 OR LATEST REVISIONS.
2. STOCK NO. 9721-0675 SHALL APPEAR ON THE CASTING. APPROXIMATE WEIGHT 198 LBS.
3. £ = MACHINE FINISHED.
4. EACH CASTING SHALL BE IDENTIFIED WITH THE MANUFACTURER'S NAME OR LOGO.
5. SEE DWG. 2-2-0434 FOR 40" M.H. RING COVER.
6. SEE DWG. 2-2-0431 FOR 28" M.H. COVER.
7. SEE DWG. 2-2-0450 FOR 40" SDWK M.H. GRATING FOR DOUBLE COVER FRAME.
8. CASTING SHALL BE FREE FROM SAND OR BLOW HOLES AND SHARP EDGES.
9. WITH EXCEPTION ONLY TO ANY NOTED TOLERENCES, NO DIMENSION SHALL EXCEED ±1/16"/FT.
10. REV A NEW FORMAT AND UPDATED STOCK NUMBERS PER WMIS.

COMPATIBLE UNIT 40" MANHOLE COVER RING FRAME FOR DOUBLE COVER SIDEWALK TYPE			
QTY	STOCK#	DESCRIPTION	ITEM
1	9721-06735	40" MANHOLE COVER RING FOR DOUBLE ACTING COVER SIDEWALK TYPE	EA
	DESIGNATION	DESCRIPTION	
MHAR3X40MY		MH CVR ADJ RING 40" x 3" ML CO	

DRAWN: AVI	DVLPED: JR	DATE: 04-05-02	REVIEWED: RHM	DATE: 04-05-02	APPRVD: MDW	DATE: 02-21-08	NEXT REVIEW: 02-11	REV: A

PHI PEPCO

POWER DISTRIBUTION STANDARDS

40" MANHOLE COVER RING FRAME FOR DOUBLE COVER SIDEWALK TYPE

...\DGN\2-2-1081_2-2.dgn 4/3/2008 5:27:26 PM

2-2-0471.1.1

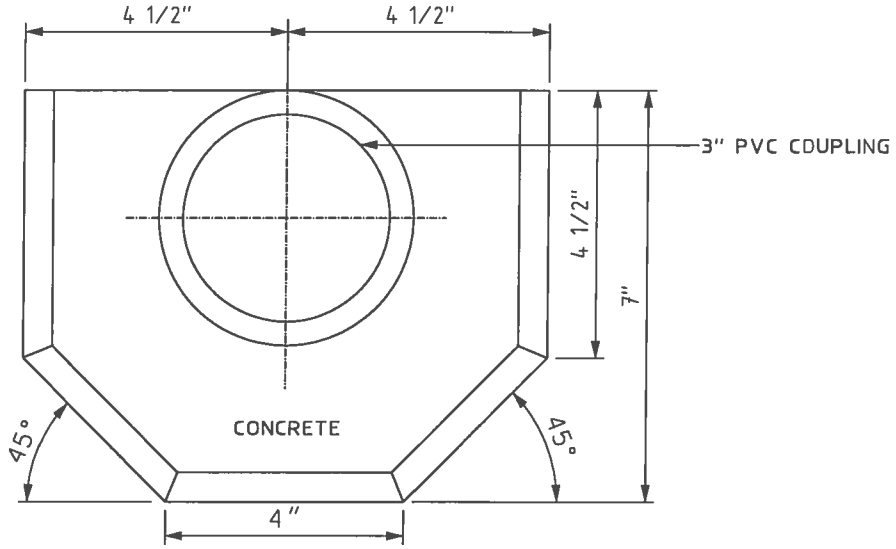

PLAN

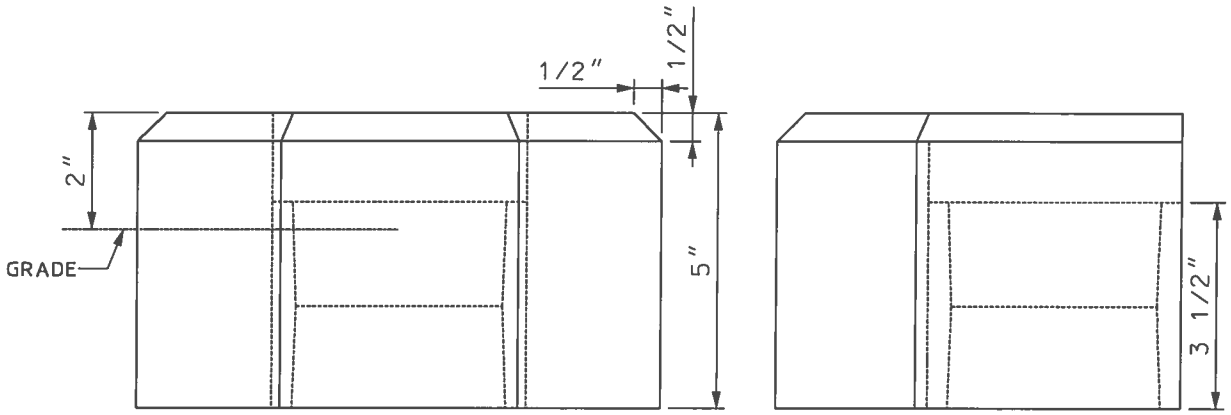

FRONT ELEVATION

SIDE ELEVATION

COLLAR NO.	COUPLING NO.	
1	3"	9721-0771
2	4"	9721-0768
3	5"	9721-0769
4	6"	9721-0770

REFERENCES:
1. DWG. # 2-2-0727 RISER SHEILD ASSEMBLY.
2. DWG. # 2-2-0470 RISER PIPE ASSEMBLY.
3. DWG. # 2-2-0472 ADAPTER.

DRAWN: DPJ	DVLPED: JWW DATE: 11/25/80	REVIEWED: TWM DATE: 10-15-08	APPRVD: MDW DATE: 10-29-08	NEXT REVIEW: 10-11	REV: B

PHI PEPCO

POWER DISTRIBUTION STANDARDS

PRECAST CONCRETE COLLAR FOR U.G. TO O.H. CONNECTION

4-2-0727.1.2

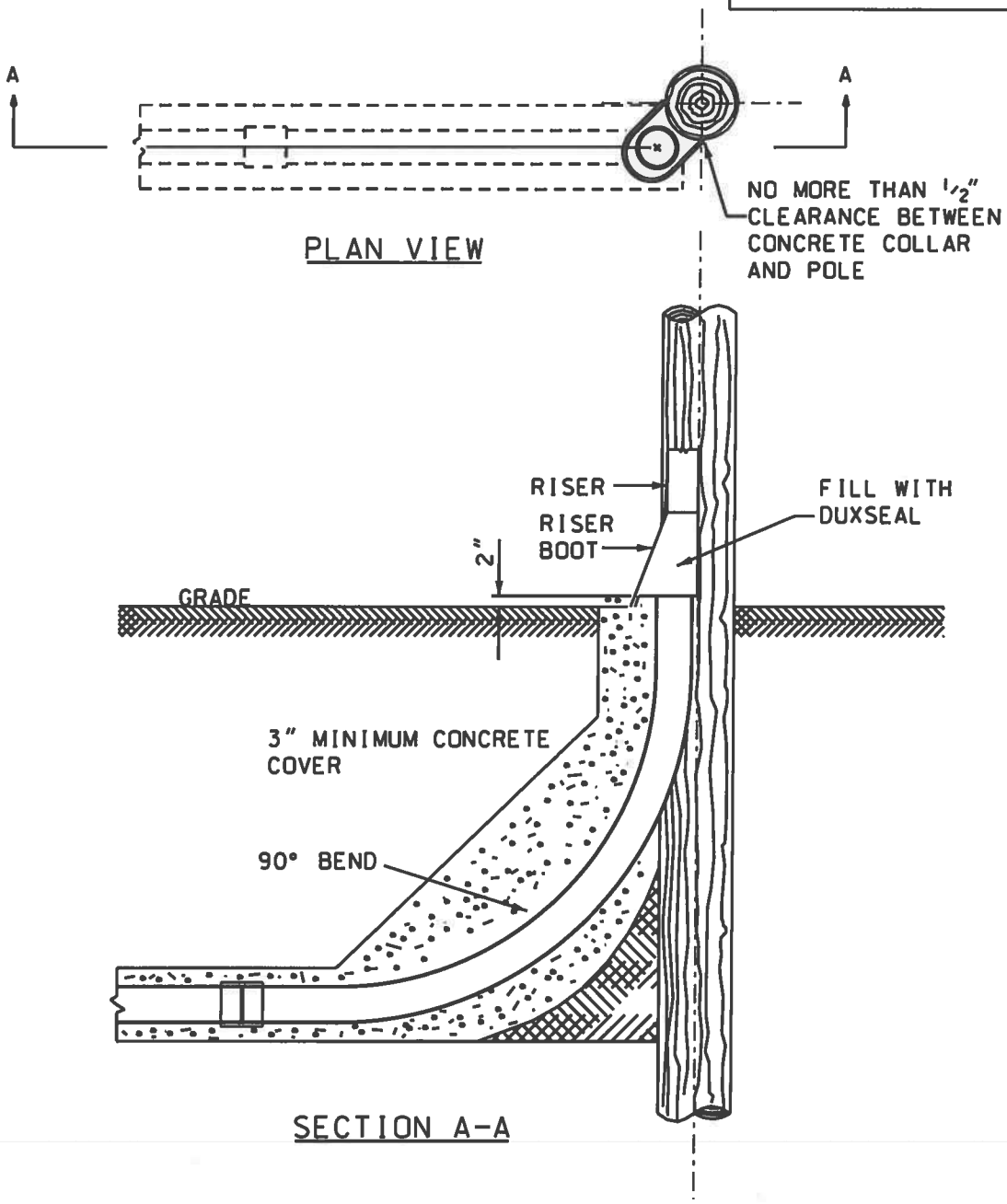

NOTES:

1. CONDUIT DEPARTMENT WILL PLUG DUCT IF RISER IS NOT INSTALLED IMMEDIATELY.
2. CUSTOMER OR CUSTOMER CONTRACTOR EXCAVATING WITHIN FIVE FEET OF A PEPCO OWNED POLE SHALL PERFORM THE WORK UNDER PEPCO SUPERVISION.
3. SEE PAGE 2 FOR ACCEPTABLE SWEEP BEND INSTALLATION.

DRAWN: DPJ	DVLPED: TC DATE: 9-1-61	REVIEWED: ANA DATE: 9-11-08	APPRVD: MDW DATE: 10-1-08	NEXT REVIEW: 10-11	REV: B

PHI PEPCO

POWER DISTRIBUTION STANDARDS

POLE RISER SHIELD U.G. TO O.H. CONNECTION ASSEMBLY CONSTRUCTION

...\0727.dgn 10/14/2008 10:36:42 AM

4-2-0727.2.2

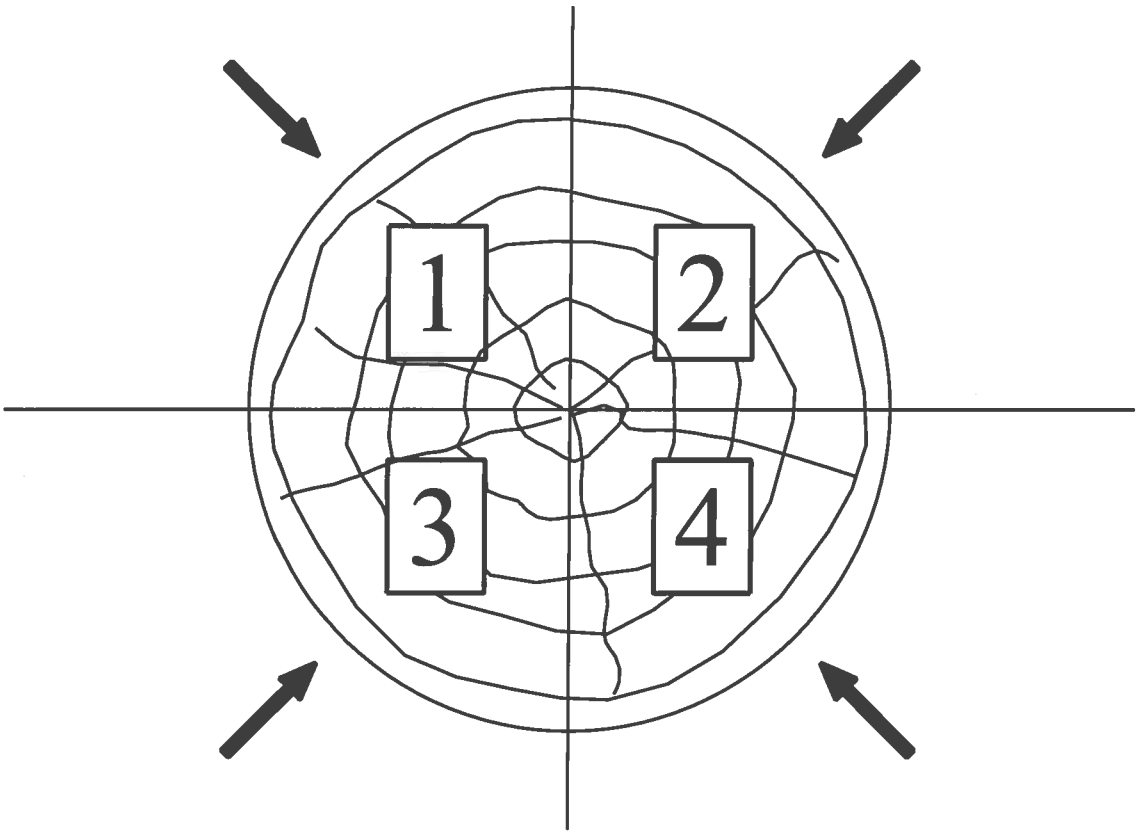

ROAD <<<<<< Traffic Direction

DRAWN: DPJ	DVLPED: TC DATE: 9-1-61	REVIEWED: ANA DATE: 9-11-08	APPRVD: MDW DATE: 10-1-08	NEXT REVIEW: 10-11	REV: B

PHI PEPCO

POWER DISTRIBUTION STANDARDS

OVERHEAD REFERENCE FOR SWEEP BEND INSTALLATION

...\0727.dgn 10/14/2008 10:36:00 AM

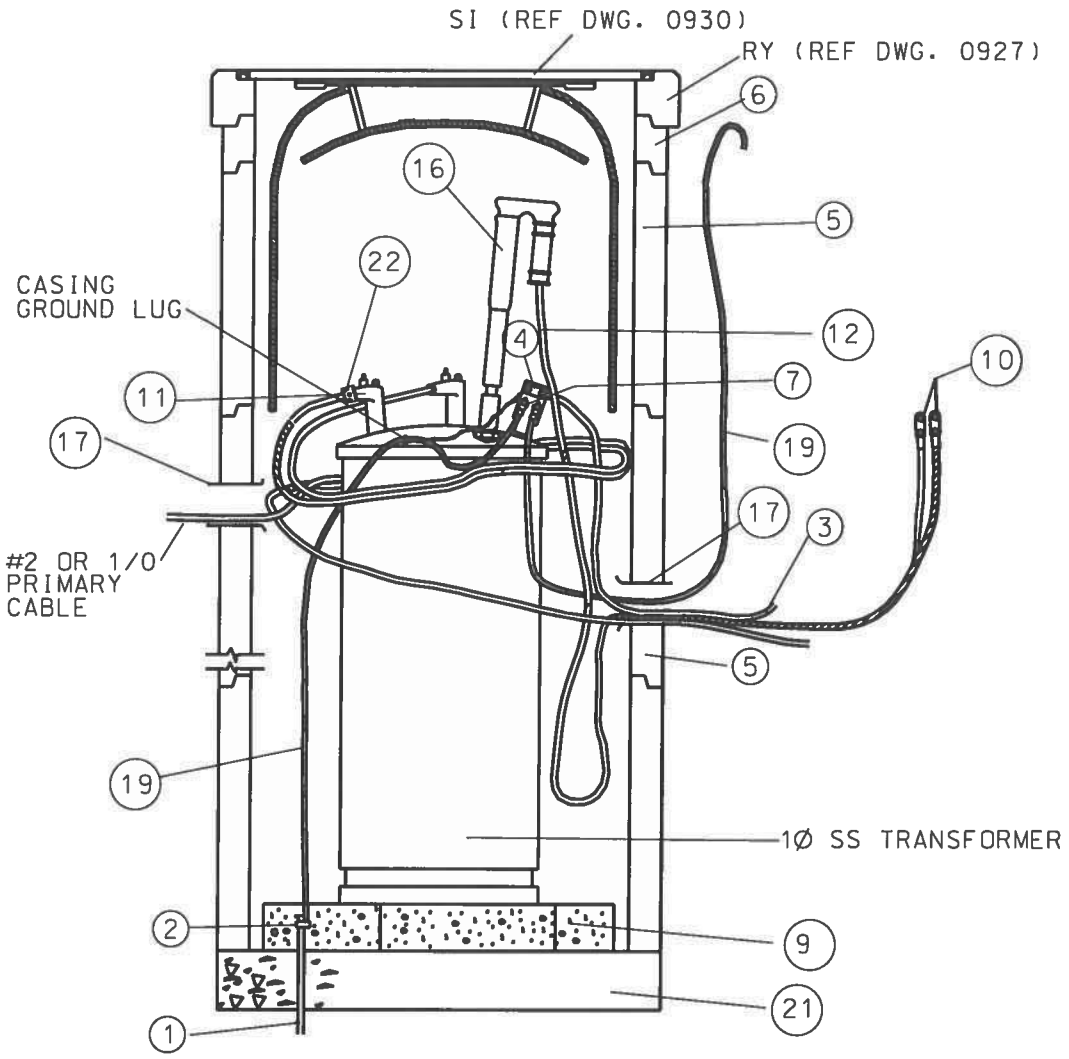

NOTES:

1. ENGINEER TO SPECIFY 15' OF PRIMARY CABLE SLACK PER LEG.
2. FOR TRANSFORMERS WITH SECONDARY THREADED STUD BUSHINGS, SUBSTITUTE THE APPROPRIATE CABLE LEAD ASSEMBLY (REF. 0909).
3. FOR ROADWAY INSTALLATIONS, SEE SHEETS 2 AND 3 OF THIS DRAWING.
4. SEE DWG. 1252.4.4 FOR MOUNTING PAD FOR CONVERTING OF SUBSURFACE TRANSFORMER TO SINGLE PHASE PAD MOUNT TRANSFORMER
5. SEE PHI SPEC.1424 FOR DETAILS.
6. INSTALL FAULT CIRCUIT INDICATOR ON OUTGOING CABLE. REFER TO DWG #1741

REV D: ADDITION OF FAULT CIRCUIT INDICATOR

REV E: MINOR REVISION TO UPDATE CODE NUMBERING IN THE DRAWING

DRAWN: KCW	DVLPED: CEG DATE: 01/05/72	REVIEWED: SAT DATE: 05/28/14	APPRVD: AAT DATE: 05/30/14	NEXT REVIEW: 05/18	REV: E

PHI

DISTRIBUTION STANDARDS

1PH SUBSURFACE TRANSFORMER INSTALLATIONS

0887.2.3

CU MACROS FOR SUBSURFACE 1PH XFMR INSTALLATION

USST1PHS	USST1PHR	COMP. UNIT	DESCRIPTION	REF DWG
1	1	SSTCBFLMB*	SUBSURFACE CHIMNY BAFFL ML URB	0890
1	1	SSTRGFMB*	SUBSURFACE RECT GRAT FR ML URB	0927
1	1	USSGSMB*	SUBSURFACE RECT GRATING ML URB	0930
1	1	USSTINSTMB*	SUBSURF TRANSFM INSTALL ML URB	0887
1	1	USSTMH36MB*	36" SUBS MANHOLE WELL ML URB	0887
1		USGF4X4RMY	SUBSURF GRATE FRAME RDWY ML CO	0887
1		MHSG4X2RMY	MH SLAB GRATE 48" X 22" RDWY ML CO	0445
1	1	FCI46LED1P	FAULT CIRCUIT INDICATOR W LED 1 PHASE	1741

EA DESIGNATION:

USST1PHS - SUBSURF TRANSF 1PH SDWK (URB OR CO); USST1PHR - SUBSURF TRANSF 1PH RDWY

COMPATIBLE UNIT BREAKDOWN FOR SUBSURFACE TRANSFORMER INSTALLATIONS

FCI46LED1P	USGF4X4RMY	USSTMH36MB*	USSTINSTMB*	ITEM	STOCK#	DESCRIPTION	IU
		1		1	9713-0112	ROD, CW, 5/8"X8', GRD	EA
		1		2	9713-0113	CLAMP, CW, 5/8", GRD	EA
			10	3	9711-3220	WIRE, CU, 4/0, SD	FT
			1	4	9717-2265	HYLUG, CU, 4/0, 2HOLE	EA
		2		5	9721-0602	CASING, STANDARD WELL	EA
		1		6	9721-0685	RING, GRADE ADJ. 36ID	EA
			4	7	9817-2113	HYLUG, CU, #2, 1-HOLE	EA
		1		8	9721-0693	CASING, CONCRETE	EA
		4		9	9721-0687	BLOCK, 4IN X8IN X16IN	EA
			2	10	9717-2433	HYLUG, CU, 350, 2HOLE	EA
			2	11	9718-8121	ELBOW, LB, 200A, 8KV	EA
			20	12	9711-2961	WIRE, CU, 350, PE600V	FT
	65			13	9700-0024	REINF. STEEL 1/2 IN	LB
	25			14	9700-0016	CONCRETE SAND	CF
			2	15	9717-2429	CONN, CU, #2, ELBOW	EA
			2	16	9717-2465	CONN, 350KCM, CU, .62"	EA
		2		17	9721-0785	PLUG, PVC, 4", COND	EA
	1			18	9721-0636	FRAME STL 4'X3' RDWY	EA
		8	8	19	9711-3211	WIRE, CU, #2 SD	FT
			6	20	9700-0250	TAG, PL, CABLE MARKER	EA
		500		21	9700-0045	BLUE STONE (BID)	LB
1				22	9713-3009	FAULT CIRCUIT INDICATOR W/LED 1 PHASE	EA

CU DESCRIPTION:

FCI46LED1P - FAULT CIRCUIT INDICATOR W/ LED 1PH.
USGF4X4RMY - SUBSURF GRATE FRAME RDWY ML CO.
USSTMH36MB* - 36" SUBS MANHOLE WELL ML URB.
USSTINSTMB* - SUBSURF TRANSFM INSTALL ML URB.

*WHEN WORK IS TO BE DONE BY OTHER THAN URB, THE DESIGNER IS TO SELECT THE APPROPRIATE COMPATIBLE UNITS FOR THE AREA TO DO THE JOB.

REV D: ADDITION OF FAULT CIRCUIT INDICATOR

DRAWN: KCW	DVLPED: CEG DATE: 01/05/72	REVIEWED: SAT DATE: 05/28/14	APPRVD: AAT DATE: 05/30/14	NEXT REVIEW: 05/18	REV: D

PHI

DISTRIBUTION STANDARDS

SUBSURFACE TRANSFORMER INSTALLATIONS (PEPCO COMPATIBLE UNITS)

PEPCO'S CU

ADJUST ROADWAY FRAME TO GRADE

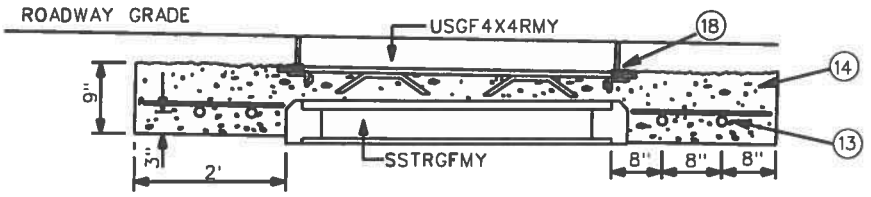

SECTION "A-A"

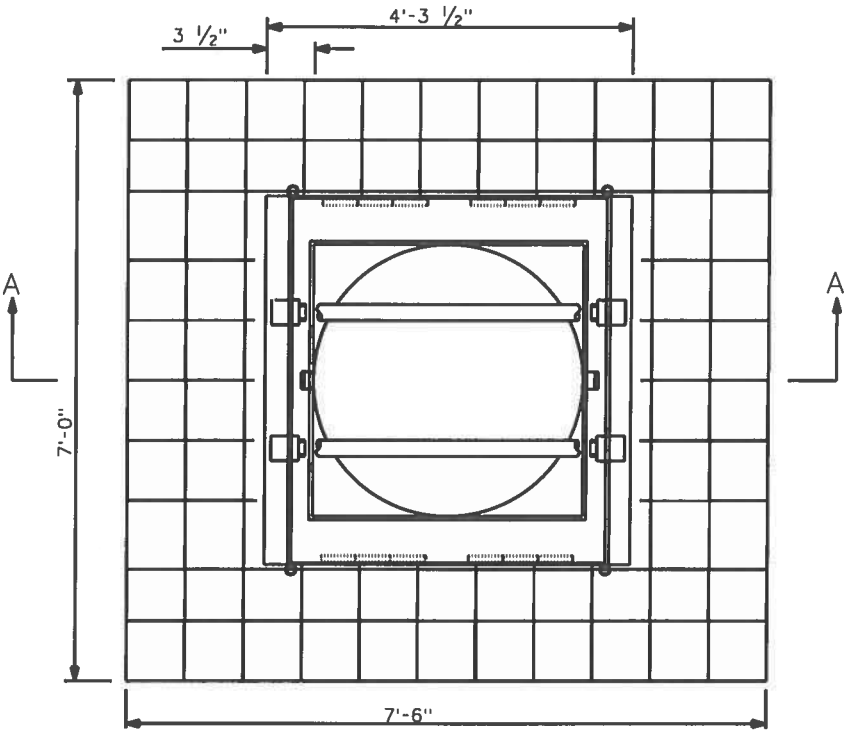

PLAN OF ROADWAY GRATING FRAME IN REINFORCED ROADWAY FOOTING

REINFORCING SCHEDULE

BAR	QTY.	LENGTH	C-C	SIZE
1	4	7'-6"	8"	#4
2	4	7'-0"	8"	#4
3	12	1'-7"	8"	#4
4	10	1'-10"	8"	#4

65 LBS. STRUCTURAL STEEL
25 CU. FT. CONCRETE

NOTES:

1. EXCAVATE HOLE FOR CONCRETE WELL CASINGS AND BACKFILL AS REQUIRED WITH CONCRETE.
2. FOR COMPATIBLE UNIT BREAKDOWN, SEE SHEET 2 OF THIS DRAWING.

REV E: MINOR REVISION TO UPDATE CODE NUMBERING IN THE DRAWING

DRAWN: AVI	DVLPED: CEG DATE: 01/05/72	REVIEWED: SAT DATE: 05/28/14	APPRVD: AAT DATE: 05/30/14	NEXT REVIEW: 01/18	REV: E

PHI DISTRIBUTION STANDARDS

SUBSURFACE TRANSFORMER INSTALLATION WITH ROADWAY GRATINGS (PEPCO COMPATIBLE UNITS)

0889.1.1

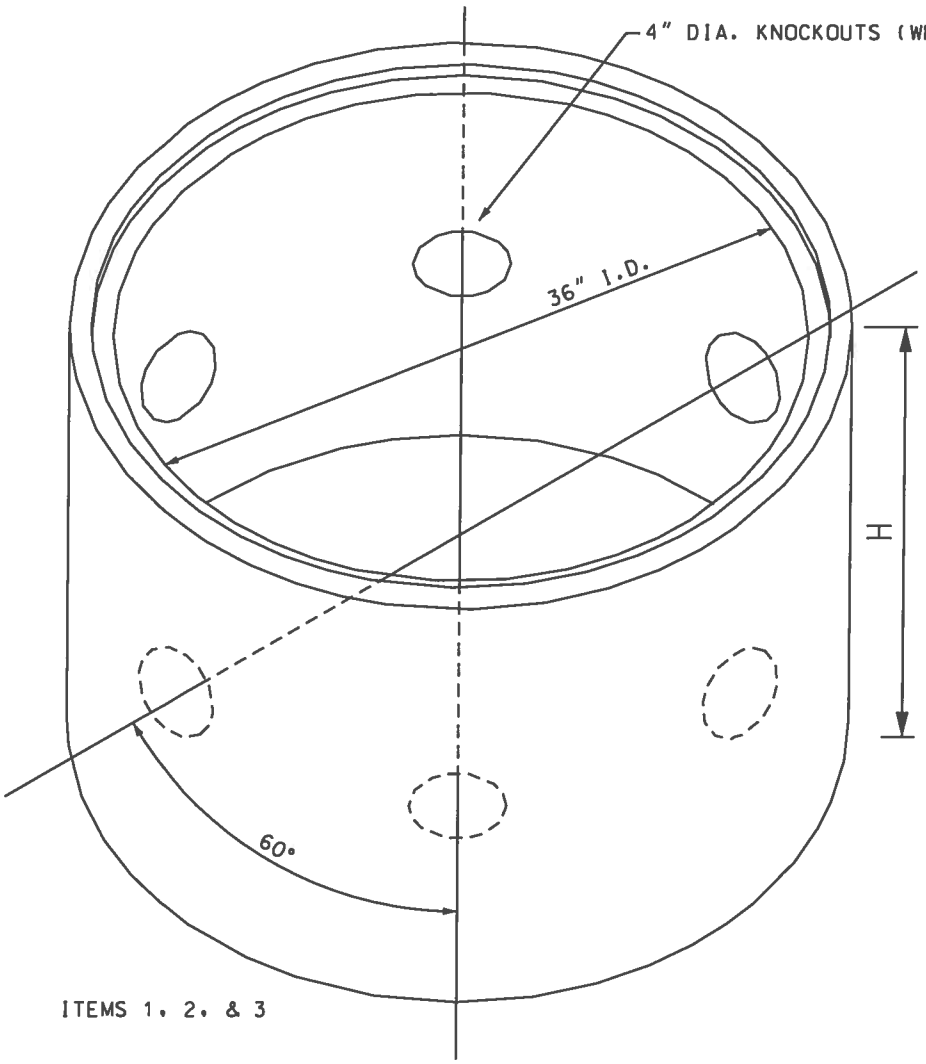

ITEMS 1, 2, & 3

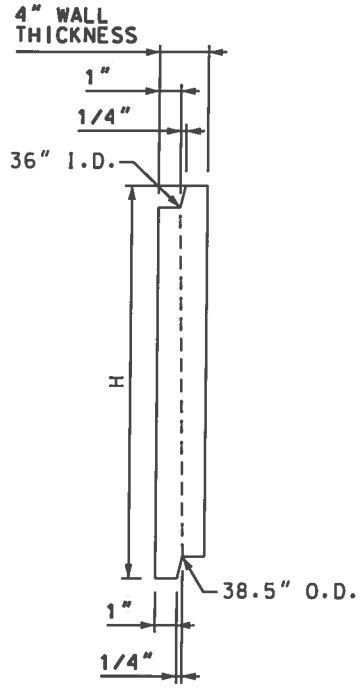

CROSS SECTION OF WELL CASING

ITEM, DIMENTION (H), & COMMENTS			
ITEM	STOCK NO.	H	COMMENTS
1	9721-0693	24"	(6) - 4" KNOCKOUTS
2	9721-0685	4"	GRADE ADJ. RING
3	9721-0602	24"	COMMON WELL, NO K.O.

NOTES:

1. ITEMS 1 AND 2 SHALL BE COMPATIBLE WITH ITEM 3 STD. JOINT DIMENSION SO THAT ITEM 3 CAN BE USED IN PLACE OF AND IN ASSOCIATION WITH ITEM 1.
2. EXTRA STRONG CONCRETE REINF. 6" X 6" / # 6 MESH. 10.5' LONG BEND ON 38" DIA. CIRCL

REV B: DUE TO ADDITION OF DIMENTION "H" IN THE DRAWING

DRAWN: AVI	DVLPED: MDW DATE: 01-05-72	REVIEWED: SAT DATE: 4/12/13	APPRVD: JKP DATE: 4/12/13	NEXT REVIEW: 4/16	REV: B

PHI PEPCO

DISTRIBUTION STANDARDS

CONCRETE WELL CASING W/ K.O'S 36"I.D. X 24"

2-7-0890.1.1

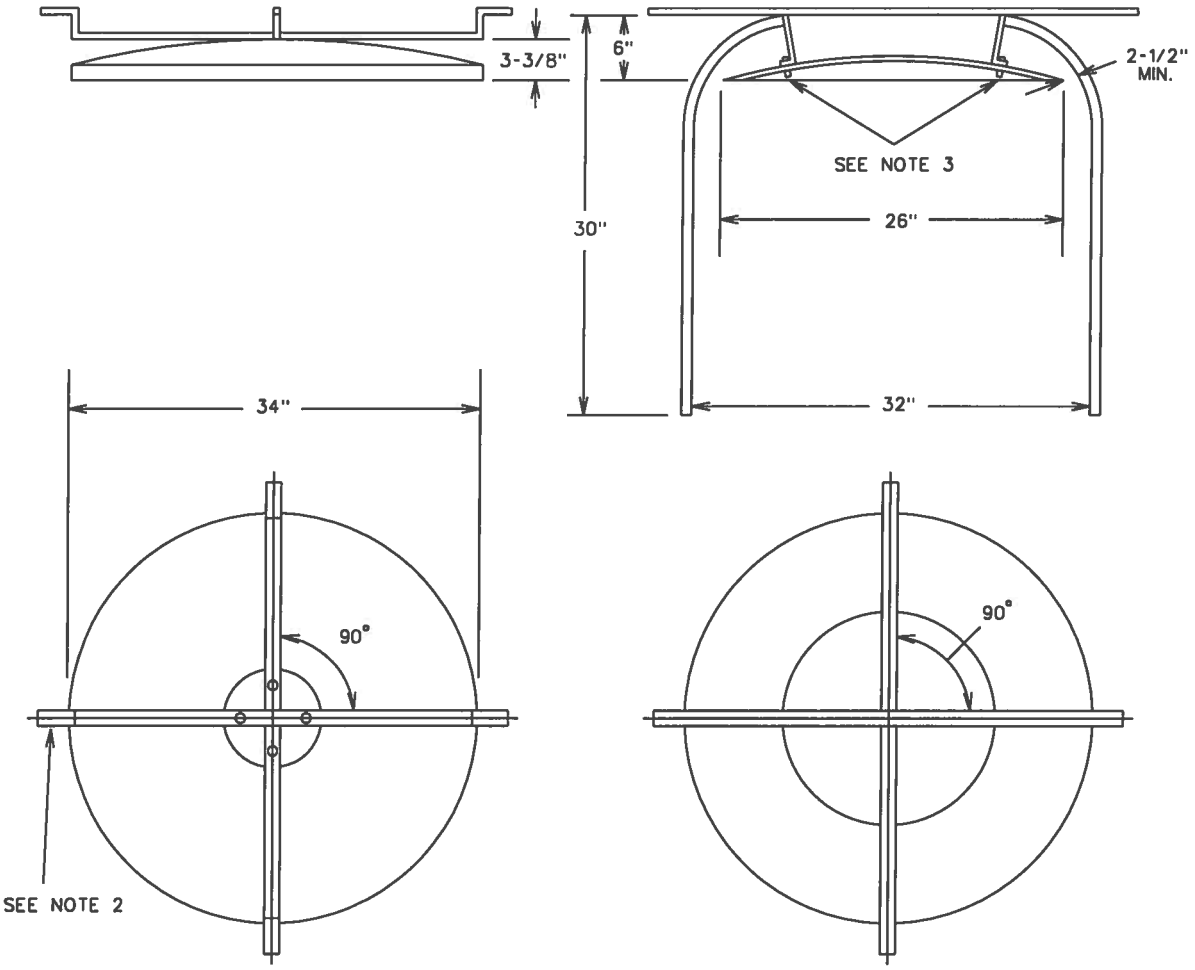

TAMPER SHIELD
9721-0691

CHIMNEY BAFFLE
9721-0696

NOTES

1. CHIMNEY BAFFLE & TAMPER SHIELD TO BE FLAME RETARDENT NON-HYGROSCOPIC, NON-METALLIC, RIGID, LIGHT STABILIZED MATERIAL.
2. MOUNTING BRACKETS AND STRAPS TO BE GALVANIZED STEEL OR APPROVED EQUAL. STRAP DIMENSIONS ARE 1" X 3/16" X 37-3/4".
3. MOUNTING HARDWARE TO BE NON CORROSIVE, ELECTRICALLY INSULATED WITH NO SHARP POINTS UNDER SHIELD.
4. TAMPER SHIELD TO BE USED ONLY FOR MAINTENANCE OF EXISTING ROUND TAP HOLES.

COMP. UNITS - TAMPER SHIELD AND CHIMNEY BAFFLE				
QTY.	ITEM	STOCK NO.	DESCRIPTION	IU
1	SJ	9721-0691	BAFFLE,FIBERGLASS30I	EA
1	SP	9721-0696	BAFFLE,CHIMNEY32INID	EA
	CU DESIGNATION		DESCRIPTION	
	SSTCBFLMB*		SUBSURFACE CHIMNY BAFFL ML URD	
	TAMPSHLDMB*		TAMPER SHIELD ML URB	

*WHEN WORK IS TO BE DONE BY OTHER THAN URB, ENGINEER IS TO SELECT THE APPROPRIATE COMPATIBLE UNITS FOR THE AREA TO DO THE JOB.

NOTES:
1. REV A: CHANGED DWG FORMAT AND UPDATED STOCK NO.'s.

DRAWN: AVI	DVLPED: MDW DATE: 09-13-93	REVIEWED: CEG DATE: 10-21-93	APPRVD: MDW DATE: 01-24-08	NEXT REVIEW: 01-11	REV: A

PHI PEPCO

POWER DISTRIBUTION STANDARDS

SUBSURFACE TAMPER SHIELD & CHIMNEY BAFFLE

...\DGN\2-7-0890_1-1.DGN 1/24/2008 5:43:40 PM

2-7-0927.1.1

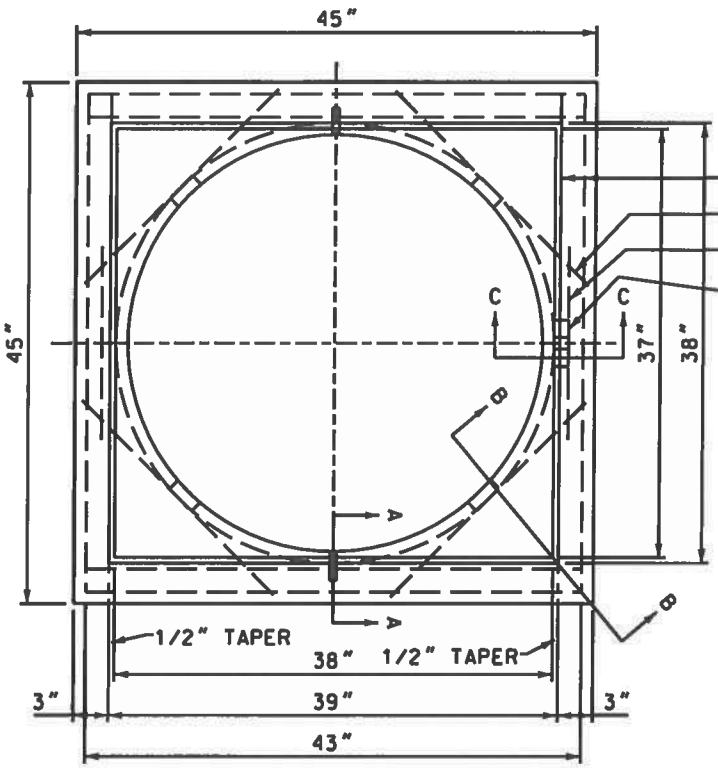

#3 DEF ROD

1. 43" LONG (16)
2. 24" LONG (8)
3. 18" LONG (2)

1-1/4" X 1-1/4" X 1/4" L X 4" LONG
WELDED TO ITEM #3 ROD
GALV AFTER WELDING

CHAMFER ALL EXTERNAL SHARP CORNERS

STOCK NO 9721-0689

NOTES:
1. COMPATIBLE UNIT DESIGNATION: SSTRGFMB OR Y
2. REV A: CHANGED STOCK NO FOR WMIS AND DWG FORMAT.

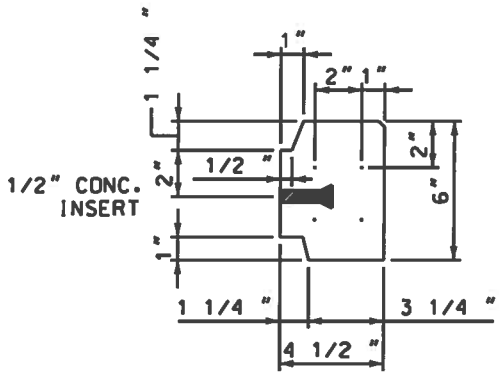

SEC A-A

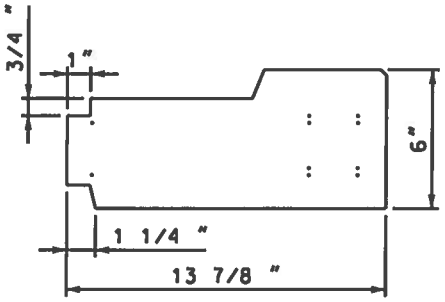

SEC B-B

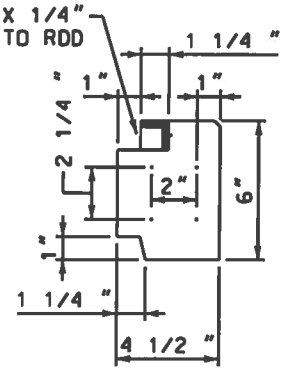

SEC C-C

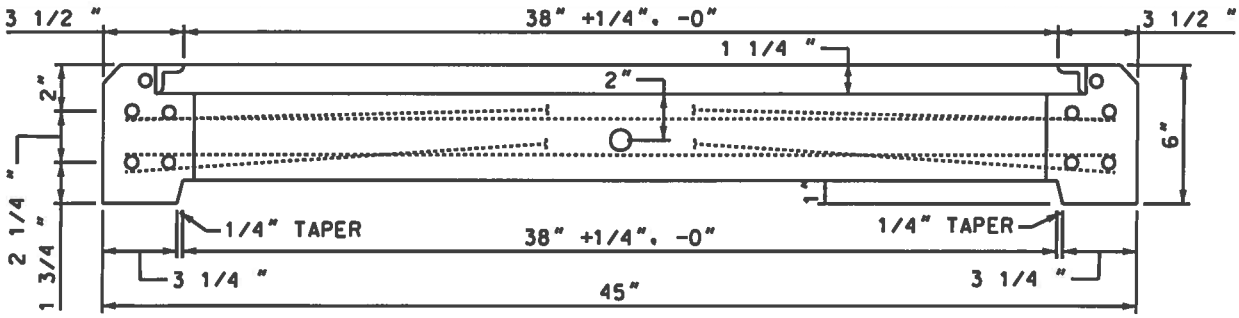

SEC ON CL WITH C-C

DRAWN: AVI	DVLPED: CEG DATE: 05-24-72	REVIEWED: CEG DATE: 07-01-04	APPRVD: MDW DATE: 01-30-08	NEXT REVIEW: 01-11	REV: A

PHI PEPCO

POWER DISTRIBUTION STANDARDS

CONCRETE GRATING FRAME FOR URD SUBSURFACE ENCLOSURE

...\DGN\2-7-0927_1-1.dgn 1/30/2008 10:44:19 AM

2-7-0930.1.1

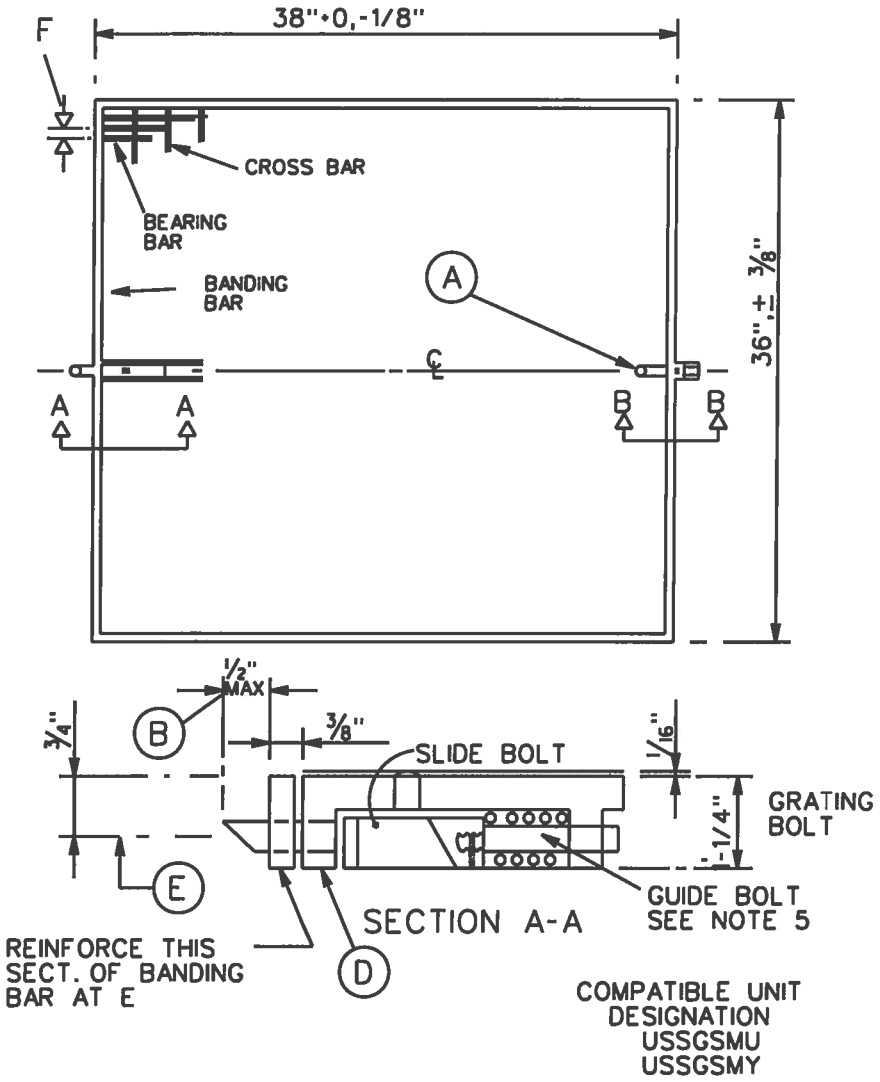

A. ADJUSTABLE LOCKING BOLT ASSEMBLY. JAMB NUT STK. 2521-41 BOLT STK. 2521-11 BY PEPCO WHEN REQ'D

B. INSTALL WITH MAXIMUM 1/2" PROJECTION OF BOLT WHEN FULLY RELAXED

C. STAINLESS STEEL OR SILICON BRONZE NUT, 1/2X13 THD. OPPOSITE CASTLE LOCK, WELD ALL AROUND RETAP AFTER GALVANIZING.

D. INSTALL CASTLE LOCK AT ONE END ONLY OF GRATING FLUSH WITH BOTTOM OF BEARING BARS AS SHOWN. LOCK BY PEPCO. STK. 3901-91.

E. DRILL 9/16" HOLE IN BANDING BAR.

F. CLEAR GRATING OPENING 1/2"+0-1/8".

NOTES:

1. FRAME GRATING ON ALL SIDES WITH BEARING BAR MATERIAL. WELD ALL CORNERS.
2. GRATING SHALL WITHSTAND MIN. UNIFORM LIVE LOADING OF 300#/SQ. FT .
3. MANUFACTURER TO USE ASTM A-569 STEEL FOR BEARING BARS AND ASTM A-510 STEEL FOR CROSS BARS OR APPROVED EQUIVALENT.
4. AFTER FABRICATION ,HOT DIP GALVANIZE IN ACCORDANCE WITH THE LATEST REVESION OF ASTM A-123 FINISHED GRATING TO LIE IN ONE PLANE AND NOT TO BE TWISTED OR BENT.
5. AFTER HOT DIP GALVANIZING, REASSEMBLE CASTLE LOCK, EXTEND PILOT HOLE IN SLIDE BOLT THROUGH THE THREADED END OF THE GUIDE BOLT WITH A #42 DRILL & INSTALL THE SPRING DRIFT PIN TO LOCK THE ASSEMBLY.
6. WHEN INSTALLED IN WALK AREAS, BEARING BARS SHOULD BE AT A RIGHT ANGLE TO THE PREDOMINANT DIRECTION OF PEDASTRIAN TRAVEL ,TO BE IN COMPLIANCE WITH ADA REQUIREMENTS.
7. CROSS BARS SHOULD BE ELECTRO-FORGE WELDED @ 4" OC.
8. STOCK # 9721-0690.
9. REV A:CHANGED DWG FORMAT AND UPDATEO STOCK #'s.

DRAWN: AVI	DVLPED: PRS DATE: 06-10-94	REVIEWED: PRS DATE: 06-28-94	APPRVD: MDW DATE: 01-30-08	NEXT REVIEW: 01-11	REV: A

PHI PEPCO

POWER DISTRIBUTION STANDARDS

URD WELL GRATING

...\DGN\2-7-0930_1-1.DGN 1/30/2008 11:30:43 AM

2-2-1084.1.1

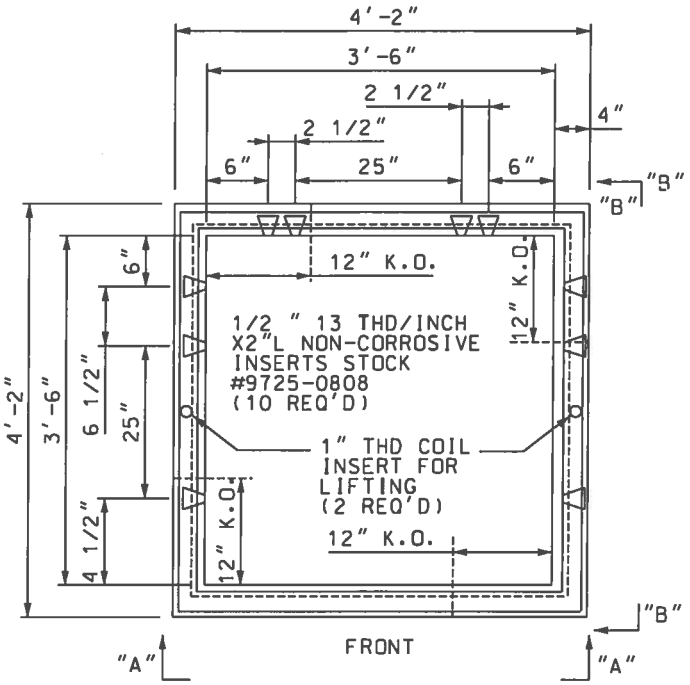

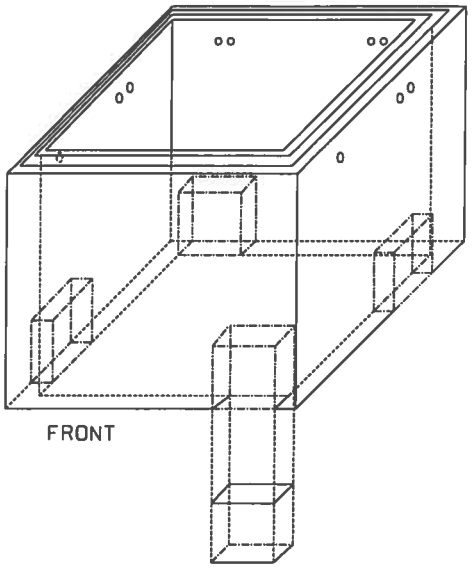

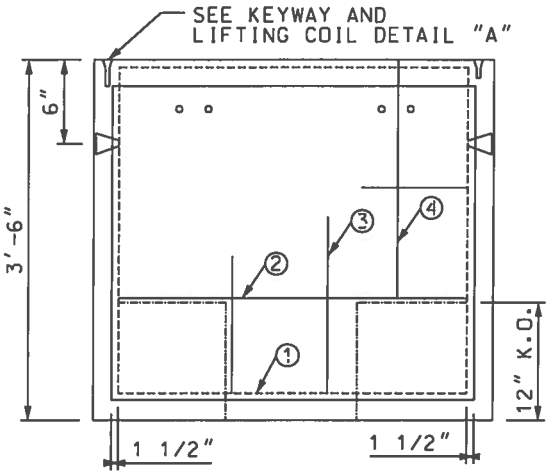

SECTION "A-A"

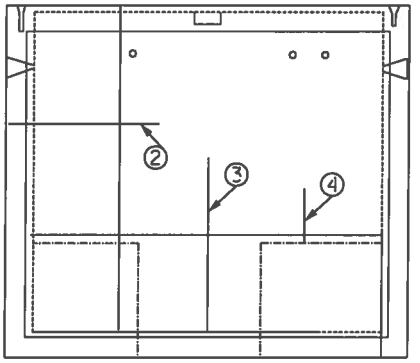

SECTION "B-B"

REINFORCING SCHEDULE				
ROD NO.	1	2	3	4
QUANTITY	4	12	16	4
ROD SIZE	#4	#4	#4	#4
LENGTH	3'4"	4'0"	3'3"	2'3"
C/C	1'	1'	1'	1'

NOTES:

1. REFER TO DWG NO.2-2-1129 FOR SDWK ROOF W/BILCO DOOR.
2. STOCK #9721-0617 APPROX. WT.2685 LBS.
3. TOTAL CONCRETE 17.9 FT. MINIMUM STRENGTH 4000 PSI.
4. IN ROADWAY INSTALLATIONS USE THE BILCO RDWY. DOOR. STOCK #9721-0686 AS THE ROOF AND ADJUST IT TO GRADE. COMPATIBLE UNIT MHR3535RMY.
5. THE TAP HOLE SHALL BE SET SO THAT THE WALL WITHOUT INSERTS (FRONT WALL) WILL BE THE LATCHED SIDE. THIS SIDE SHALL FACE THE LARGEST OPEN AREA WHEN LOCATED IN AN AREA WITH OBSTRUCTIONS. WHEN LOCATED ON A SIDEWALKO THE "FRONT WALL" SHALL BE PERPENDICULAR TO OR OPPOSITE OF THE CURB.
6. REV A: CHANGED DWG FORMAT AND CHANGED STOCK NO'S PER WMIS.

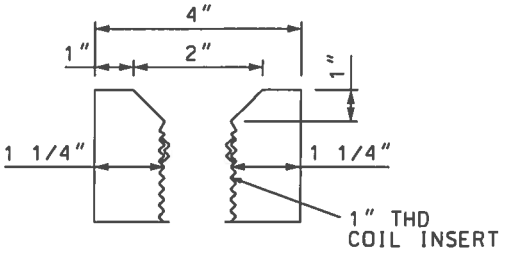

DETAIL "A" KEYWAY

DRAWN: AVI	DVLPED: RAC DATE: 05-13-77	REVIEWED: TDY DATE: 9/30/08	APPRVD: MDW DATE: 10/7/08	NEXT REVIEW: 11-11	REV: A

PHI PEPCO

POWER DISTRIBUTION STANDARDS

3.5' X 3.5' URD RECTANGULAR CASING

2-2-1129.1.1

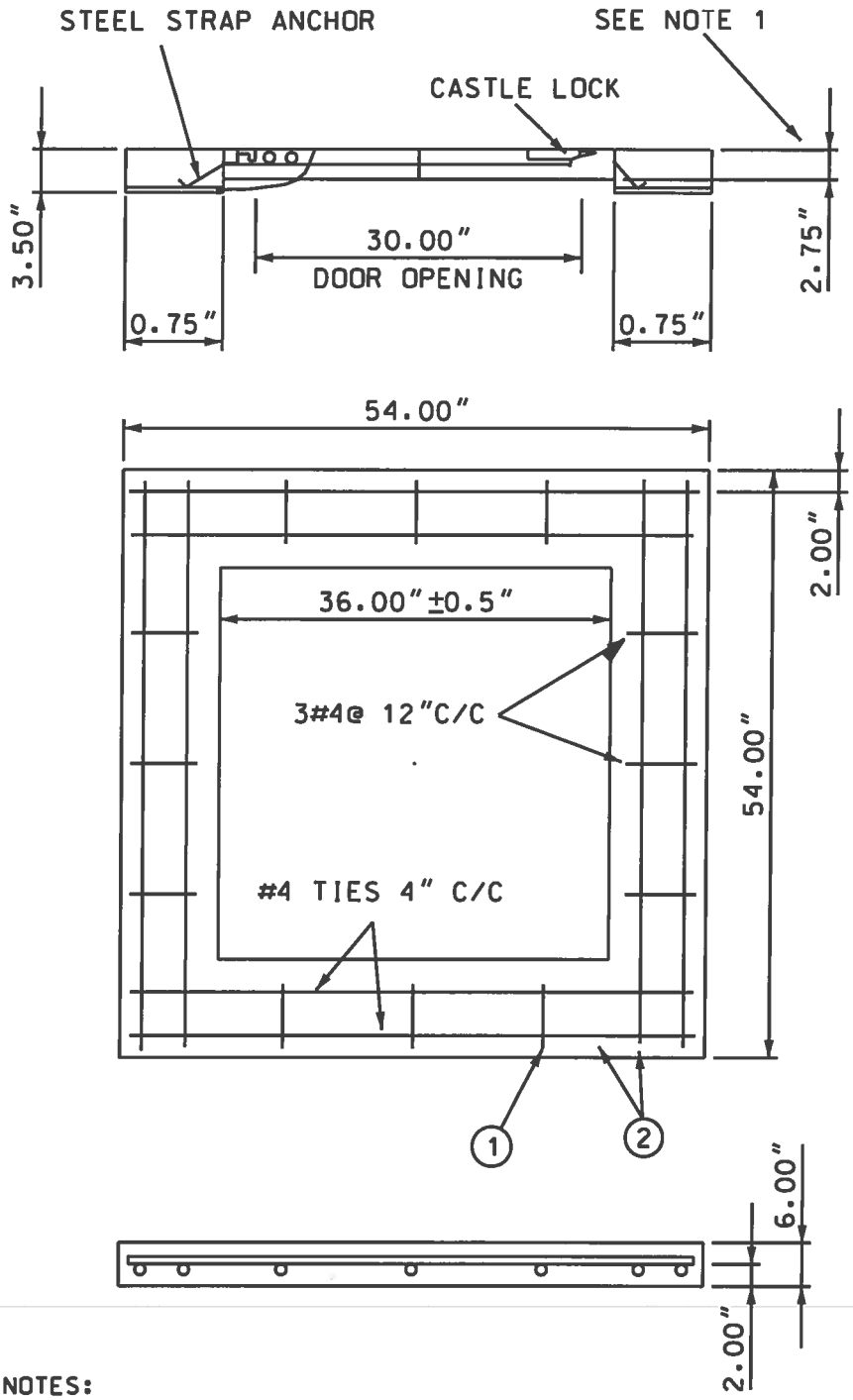

BILCO TYPE DOOR
STOCK NO. 9721-0676
(SEE NOTE 5)

CONCRETE SLAB ASSEMBLY
STOCK NO. 9721-0694
COMPATIBLE UNIT MHR3535SMB

REINFORCING SCHEDULE		
ROD NO.	1	2
QUANTITY	12	8
SIZE	#4	#4
LENGTH	6"	4'-4"

NOTES:

1. ONE COAT OF BITUMINOUS COATING ON SURFACE THAT WILL COME IN CONTACT WITH CONCRETE.
2. OUTSIDE OF MANHOLE UNDER THE FRAME REQUIRES 6" OF COMPACTED STONE.
3. ULTIMATE STRENGTH OF CONCRETE - 4000 PSI
4. REINFORCING STEEL ASTM 615 GRADE 60.
5. DOOR SHALL BE DESIGNED FOR A LIVE LOAD OF 300 LB / SQ. FT PER NESC GUIDELINES.
6. REV A: CHANGED DWG FORMAT AND CHANGED STOCK NO'S PER WMIS.

DRAWN: AVI	DVLPED: RAC DATE: 05-03-78	REVIEWED: CEG DATE: 07-01-04	APPRVD: MDW DATE: 01-31-08	NEXT REVIEW: 01-11	REV: A

PHI PEPCO

POWER DISTRIBUTION STANDARDS

BILCO DOOR SDWK ROOF FOR 3.5' x 3.5' URD RECTANGULAR CASING

REBAR SCHEDULE SIZE	REBAR SCHEDULE SPACING	CONCRETE MIX 4000 PSI CU. FT.	PAD SIZE	PRECAST PAD STOCK NO.	COMP. UNIT DESIGNATION	TRANS SIZE (KV)	TRANS SIZE (KVA)	DESCRIPTION
#4	12" c.c.	20	7'-6" X 6'-4"	9721-0699	3PHTPSMY	15 25	75-500 75-500	3PH TR PAD ML CO
#4	12" c.c.	25	7'-6" X 7'-6"	9721-0698	3PHTPMMY	15 25 35	750-1500 750-2500 75-1000	3PH TR PAD ML CO
#4	12" c.c.	35	8'-10" X 8'-5"	9721-0697	3PHTPLMY	15 35 All Stepdown	2000-2500 1500-2500 75-1000	3PH TR PAD ML CO

7'-6" X 6'-4" PAD

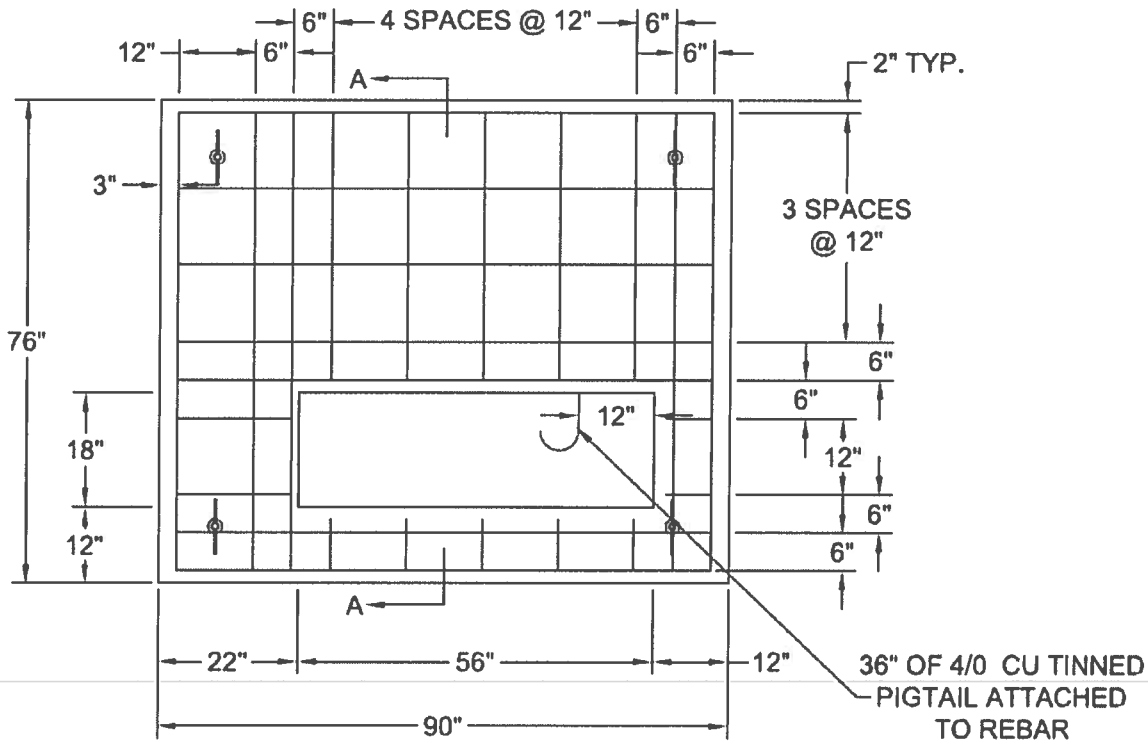

PLAN VIEW

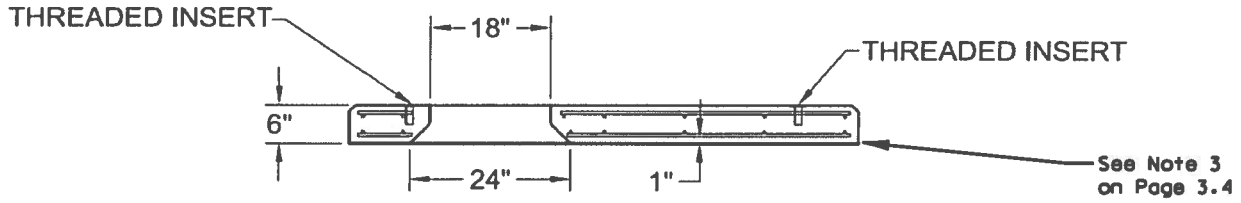

SECTION VIEW A-A

DRAWN: RLH	DVLPED: RS DATE: 11/06/07	REVIEWED:RLH DATE: 2/12/15	APPRVD: AAT DATE: 2/12/15	NEXT REVIEW: 2/19	REV: D

PHI PEPCO

POWER DISTRIBUTION STANDARDS

MOUNTING PADS FOR THREE PHASE PADMOUNT TRANSFORMERS

7'-6" X 7'-6" PAD

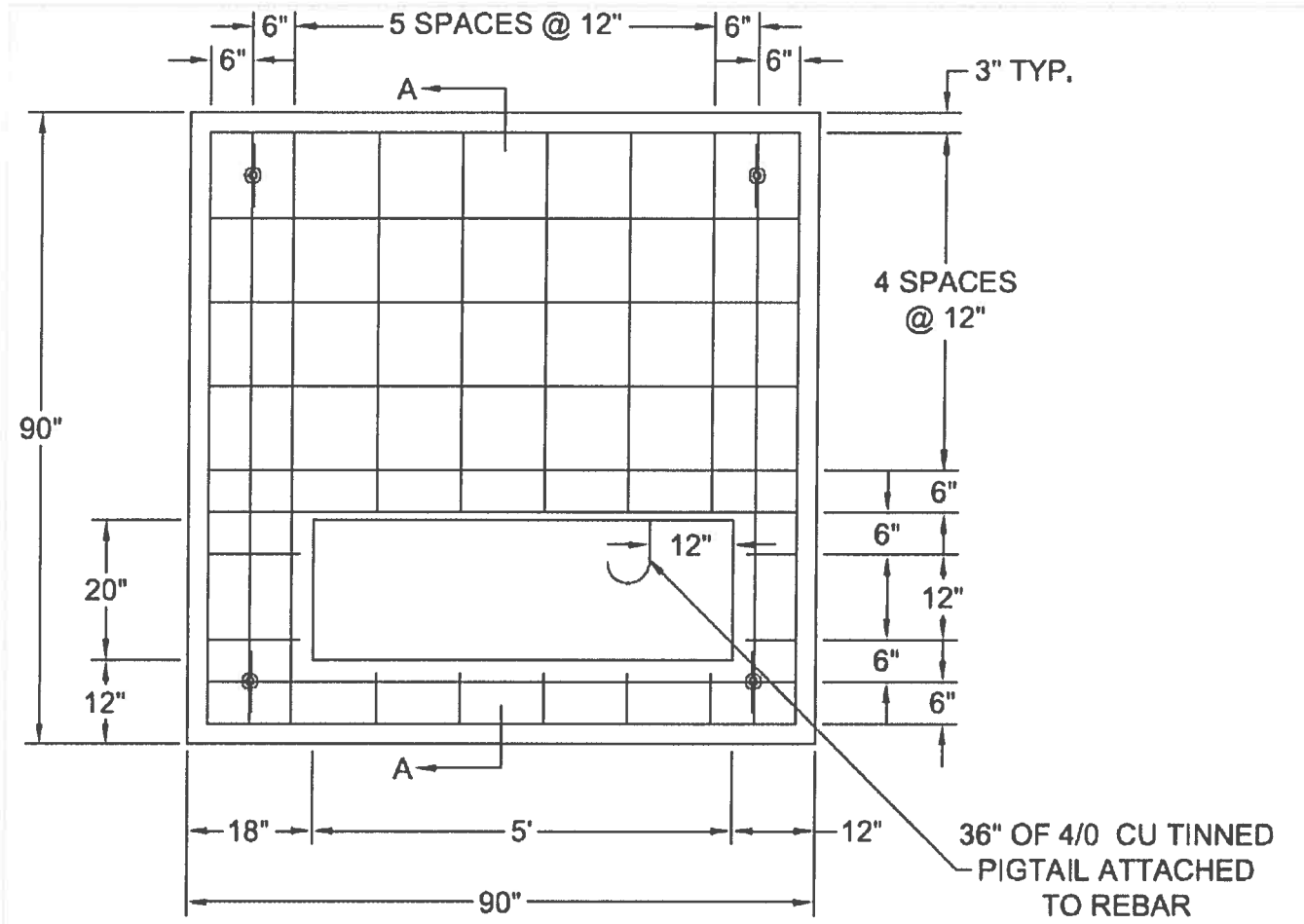

PLAN VIEW

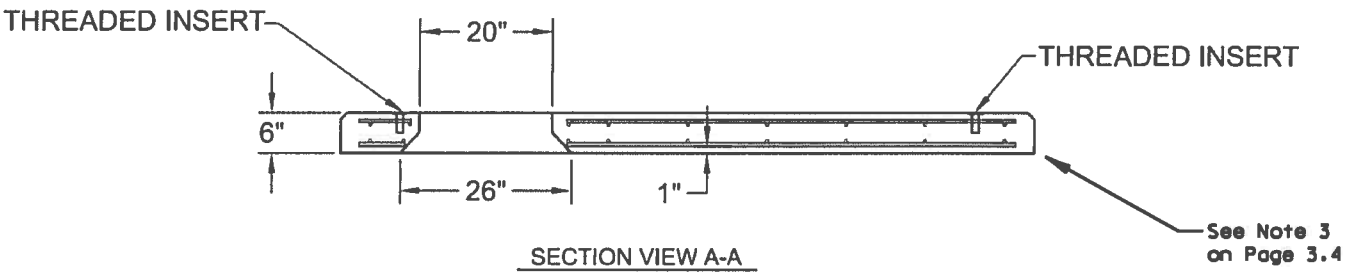

SECTION VIEW A-A

DRAWN: RLH	DVLPED: RS DATE: 11/06/07	REVIEWED:RLH DATE: 2/12/15	APPRVD: AAT DATE: 2/12/15	NEXT REVIEW: 2/19	REV: C

PHI PEPCO

POWER DISTRIBUTION STANDARDS

MOUNTING PADS FOR THREE PHASE PADMOUNT TRANSFORMERS

8'-10" X 8'-5" PAD

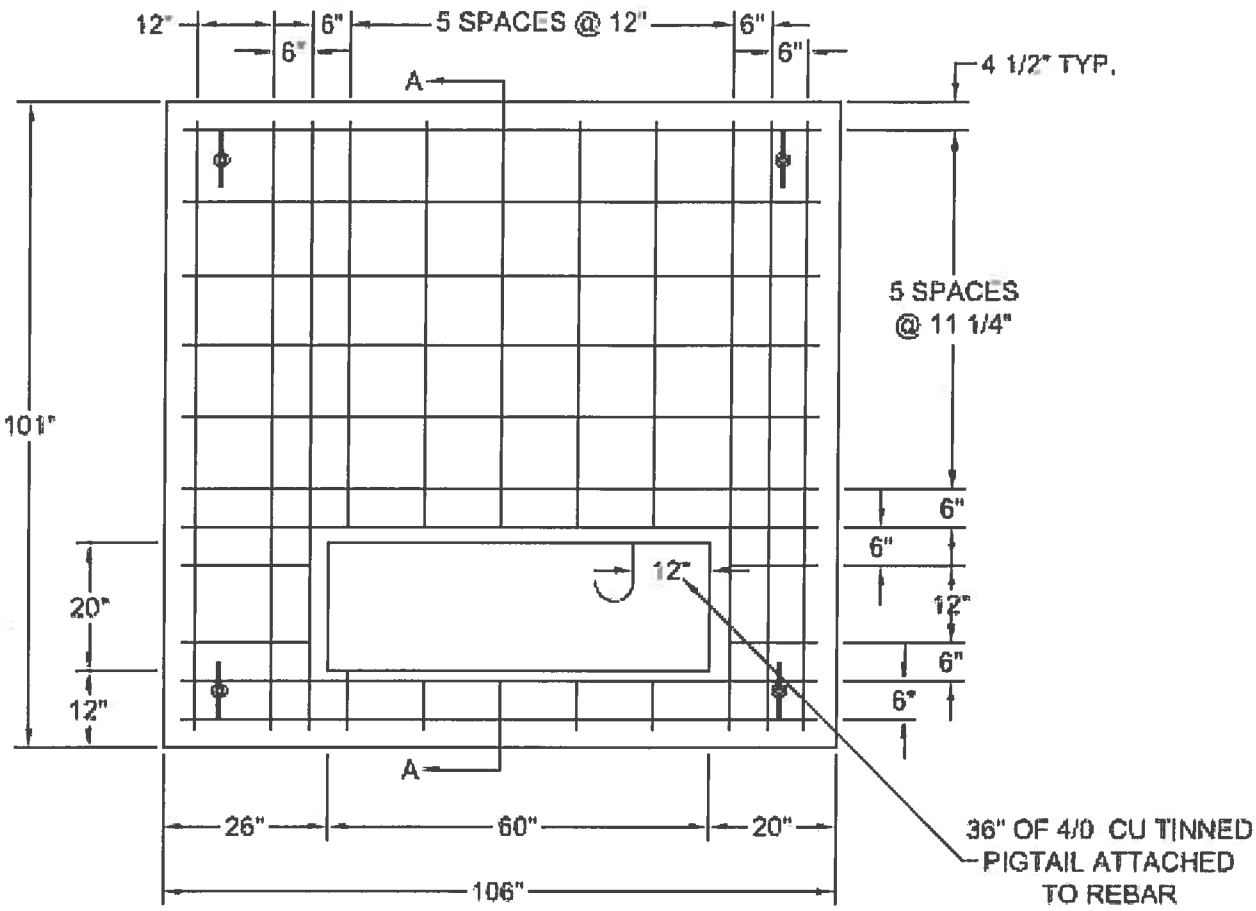

PLAN VIEW

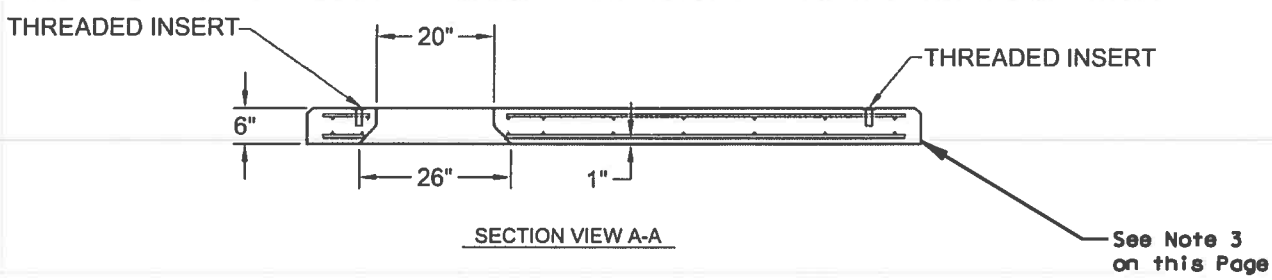

SECTION VIEW A-A

NOTES:
1. FOR PROTECTIVE BUMPER PIPE INSTALLATION SEE SHEET 4 OF 4.
2. SECONDARY DUCTS. NUMBER. AND SIZE ARE TO BE SPECIFIED BY THE ENGINEER.
3. ALL BACKFILL TO BE COMPACTED RC6 OR CR6.
4. TOP AND BOTTOM REINFORCEMENT REBAR SCHEDULES ARE IDENTICAL.
5. REV.A: REDRAWN FOR NOTES AND CHANGE STK. NOs . FOR WMIS.
6. REV.B. DEFINED THICKNESS OF THE BUMPER PIPE.

DRAWN: RLH	DVLPED: RS DATE: 11/06/07	REVIEWED:RLH DATE: 2/12/15	APPRVD: AAT DATE: 2/12/15	NEXT REVIEW: 2/19	REV: D

PHI PEPCO

POWER DISTRIBUTION STANDARDS

MOUNTING PADS FOR THREE PHASE PADMOUNT TRANSFORMERS

0983_4.4

COMPATIBLE UNITS - 3 PHASE TRANSFORMER PADS AND BUMPER PIPES							
QUANTITY				CODE	STOCK#	DESCRIPTION	IU
	19	19	13	AGU	9721-0869	BEND, PVC, 4", 90D-36R	EA
	1			AMB	9721-0697	PAD, CONC, 8'10"X8'5"	EA
		1		AMC	9721-0698	PAD, CONC, 7'6"X7'6"	EA
			1	AMD	9721-0699	PAD, CONC, 7'6"X6'4"	EA
100				BHW	9722-0912	CONDUIT, GI 5"X10'	FT
	1	1	1	CQ	9739-0166	PADLOCK, BRZ	EA
	4	4	4	ES	9713-0112	ROD, CW, 5/8", GRD	EA
	4	4	4	ET	9713-1508	CLAMP, CW, 5/8", GRD	EA
	4	4	4	EZ	9700-0021	CONNECTOR	EA
	1	1	1	MN	9721-0803	BEND, PVC, 2", 90D-24R	EA
	65	60	55	MV	9711-3211	WIRE, CU, #2, SD TBC	FT
	3	3	3	MY	9711-3220	WIRE, CU, 4/0, SD	FT
	4	3	3	UQ	9700-0043	BANK RUN GRAVEL	TN
2	4	4	4	UR	9700-0016	CONCRETE, PRE-MIX	CF

CU DESIGNATION	DESCRIPTION
3PHTPSMY	3PH TR PAD 75-500KVA ML CO
3PHTPMMY	3PH TR PAD 750-1500KVA ML CO
3PHTPLMY	3PH TR PAD 2000-2500KVA ML CO
BPMY	BUMPER PIPE 5IN ML CO

NOTES:

1. USE BUMPER PIPES AS NECESSARY TO PROTECT PADMOUNTED TRANSFORMERS NEAR DRIVEWAYS AND PARKING AREAS. BUMPER PIPE IS TO BE CONSTRUCTED OF MINIMUM 0.25 INCH THICK GALVANIZED SCHEDULE 40 RIGID PIPE.
2. ENCASE CONDUIT BENDS IN SLOT WITH CONCRETE BEFORE PULLING CABLES PORTION OF SLOT NOT COVERED BY XFMR ENCLOSURE SHOULD BE FILLED WITH GROUT
3. 2" BEND ON PRIMARY END IS TO BE USED FOR #2 GROUND CABLE.
4. REV. A: REDRAWN FOR NOTES.CORRECTED STK. NOs. FOR WMIS AND ELIMINATED DIMENSIONAL CONFLICT WITH GROUND WIRE & BUMPER PIPLE.
5. CONDUITS TO BE HELD TIGHT TO OUTSIDE OF WINDOW FOR MAXIMUM SEPERATION OF PRIMARY AND SECONDARY.
6. PAD IS TO BE BUILT ON LEVEL GROUND. WITH 10' OF LEVEL GROUND IN THE FRONT AND 3' OF LEVEL GROUND ON THE SIDES AND BACK.
7. CONCRETE FILLED BUMPER PIPES ARE TO BE SET IN CONCRETE.

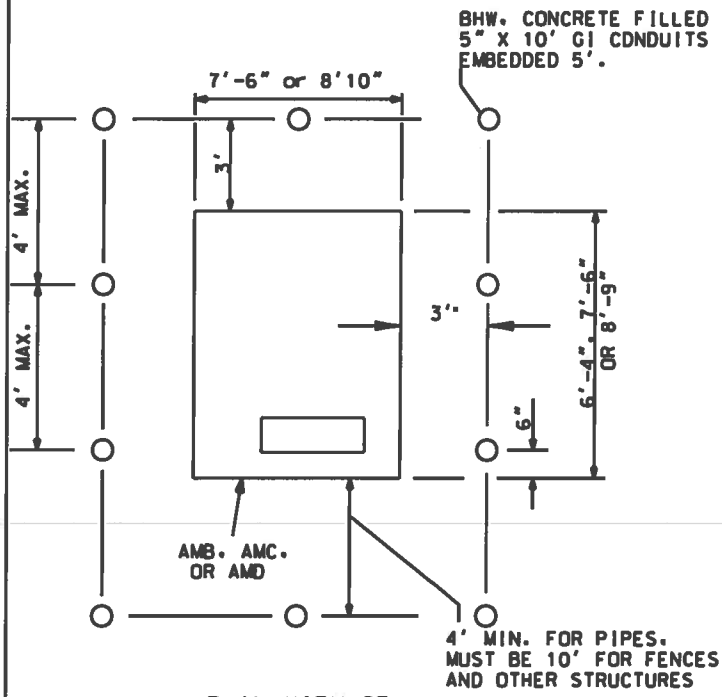

PLAN VIEW OF BUMPER PIPE INSTALLATION

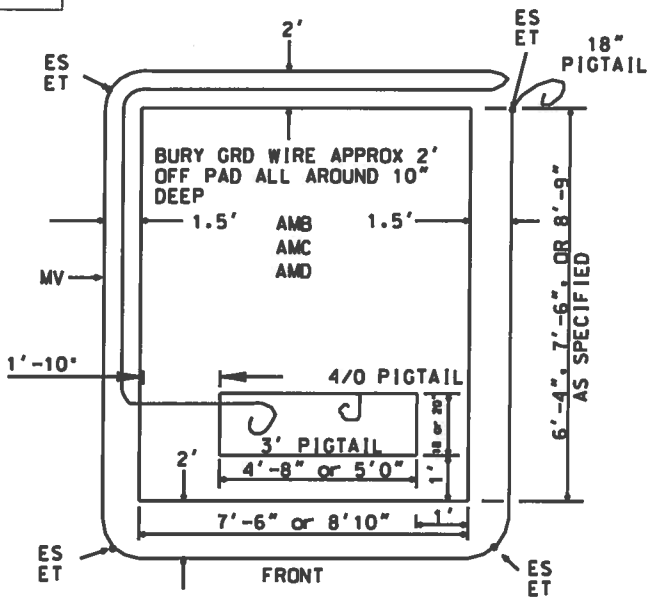

GROUNDING PLAN

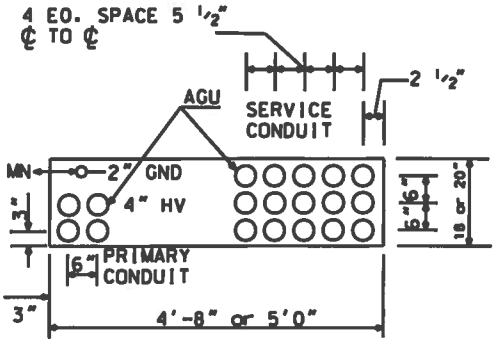

CONDUIT OPENING FOR PRECAST PADS TYPICAL DUCT DETAIL

DRAWN: RLH	DVLPED: RS DATE: 11/06/07	REVIEWED:RLH DATE: 2/12/15	APPRVD: AAT DATE: 2/12/15	NEXT REVIEW: 2/19	REV: C

PHI PEPCO

POWER DISTRIBUTION STANDARDS

MOUNTING PADS FOR THREE PHASE PADMOUNT TRANSFORMERS

J-380

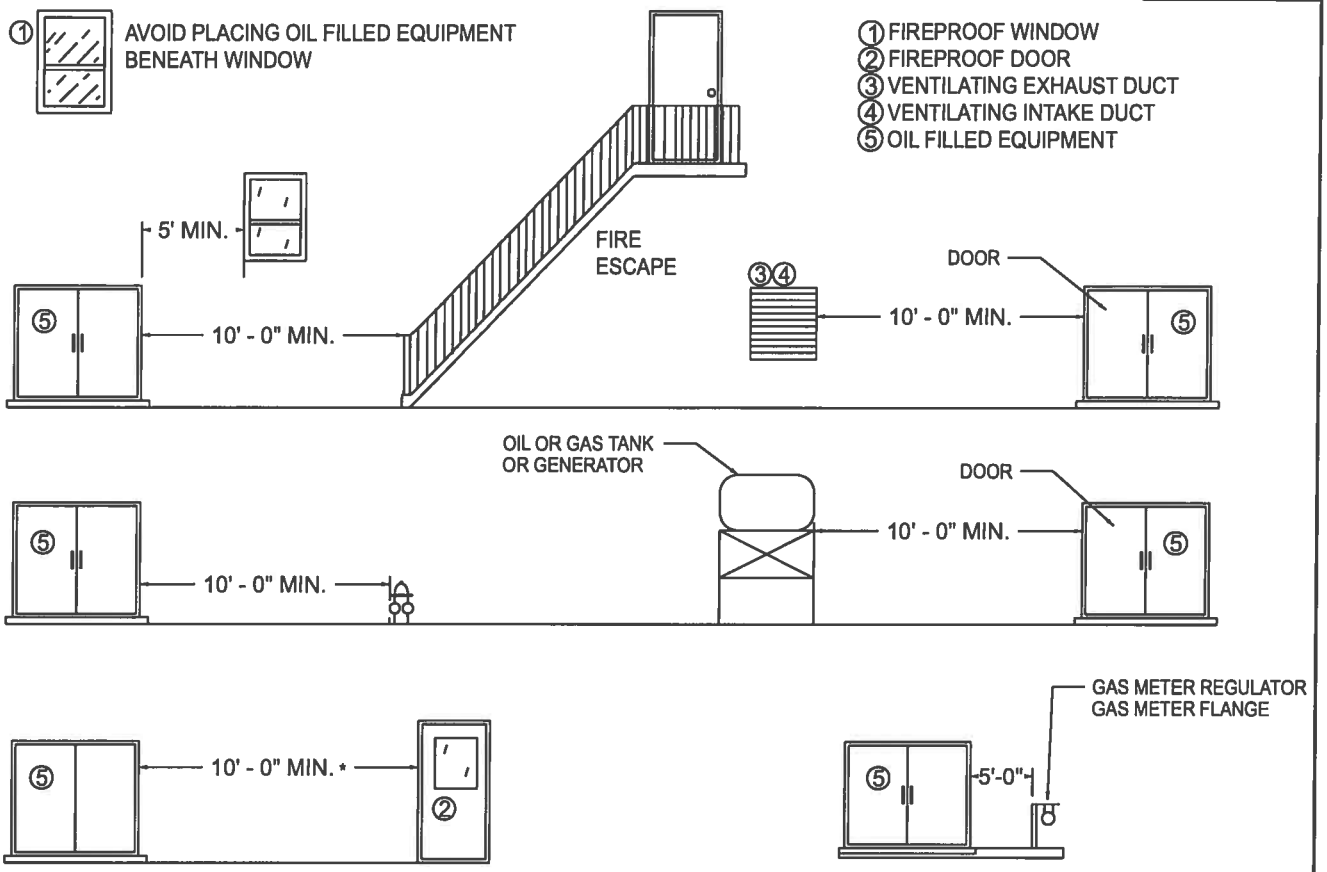

* IF THIS IS AN EXIT OF A PUBLIC ASSEMBLY ROOM SUCH AS AN AUDITORIUM, CHANGE TO 25 FEET.

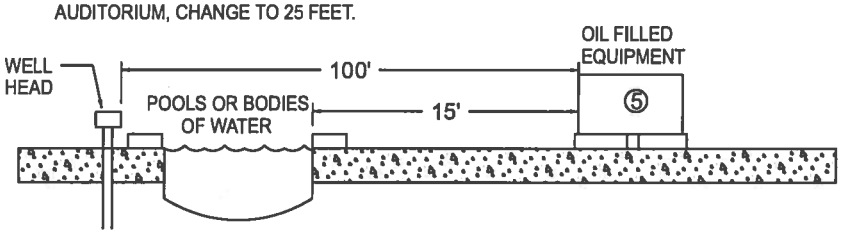

AVOID PLACING TRANSFORMER BENEATH WINDOW

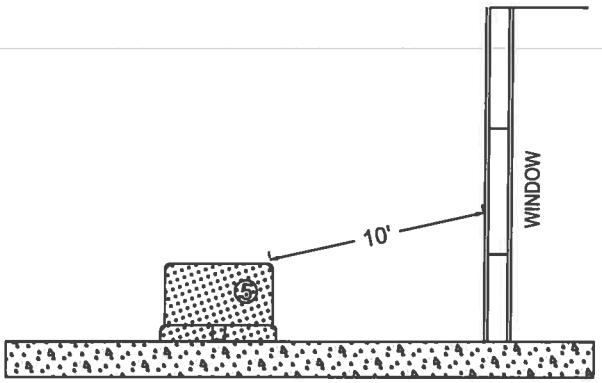

1 - ALL DIMENSIONS SHOWN ARE MINIMUMS.
2 - THERE SHALL BE NO PIPING OR CONDUIT UNDER PAD OTHER THAN REQUIRED TO CONNECT TO EQUIPMENT.
3 - NO PORTION OF THE BUILDING SHALL EXTEND OVER EQUIPMENT.
4 - ADEQUATE PASSAGEWAYS TO ACCOMMODATE TRUCKS OR OTHER NECESSARY LIFTING AND HAULING EQUIPMENT SHALL BE PROVIDED TO ALLOW FOR EQUIPMENT REPLACEMENT.

DRAWN: KCW	DVLPED: MRS DATE: 07/16/12	REVIEWED: MRS DATE: 07/17/12	APPRVD: JKP DATE: 07/19/12	NEXT REVIEW: 8/15	REV: –

PHI

DISTRIBUTION STANDARDS

CLEARANCES OF OIL FILLED EQUIPMENT TO BUILDINGS, WINDOWS, ETC. AND PROTECTION OF EQUIPMENT EXPOSED TO TRAFFIC

...\notes2F7F16\1738_FINAL.dgn 8/21/2012 6:26:02 AM

J-380.1

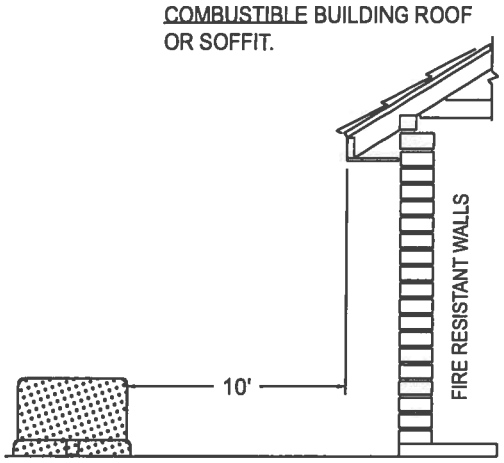

OIL FILLED EQUIPMENT CLEARANCES FROM
FIRE-RESISTANT WALLS WITH COMBUSTIBLE ROOFING

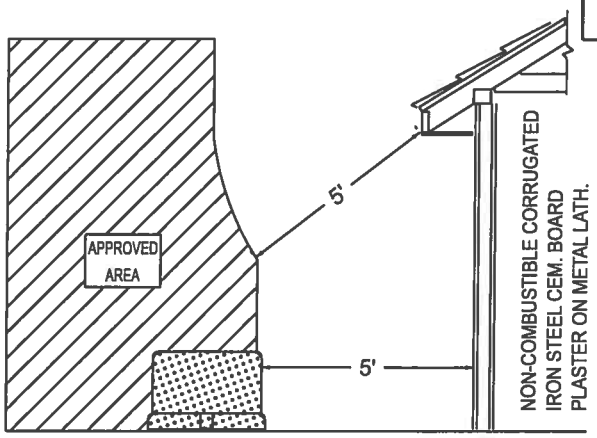

OIL FILLED EQUIPMENT CLEARANCES FROM
NON-COMBUSTIBLE SURFACES

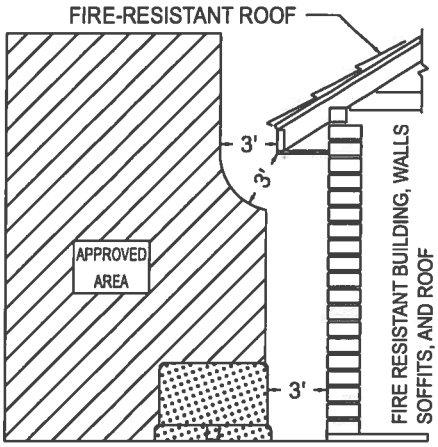

OIL FILLED EQUIPMENT CLEARANCES FROM
COMBUSTIBLE SURFACES

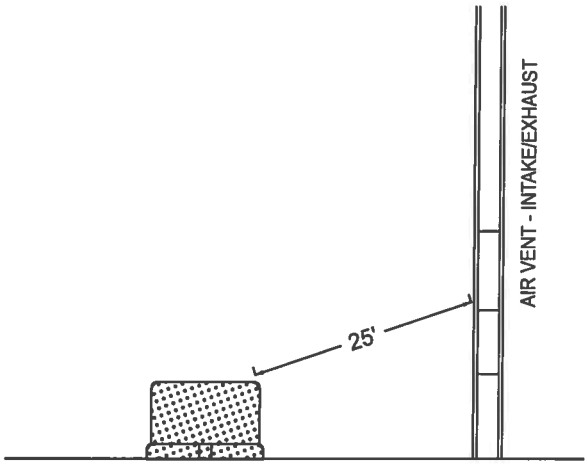

OIL FILLED EQUIPMENT CLEARANCES FROM
AIR VENT - INTAKE/EXHAUST

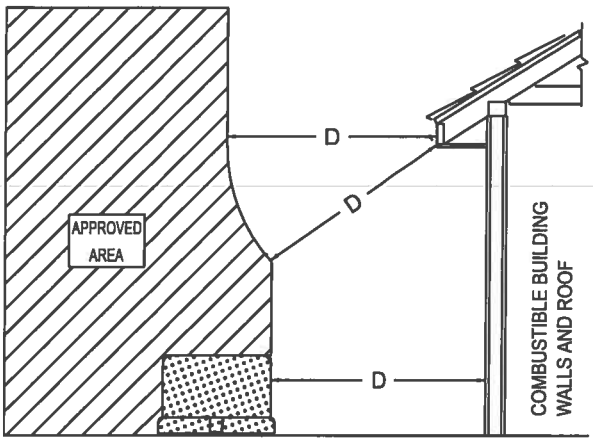

OIL FILLED EQUIPMENT CLEARANCES FROM
COMBUSTIBLE SURFACES

D
10' - 75 KVA OR LESS
20' - 76 TO 300 KVA
30' - OVER 300 KVA

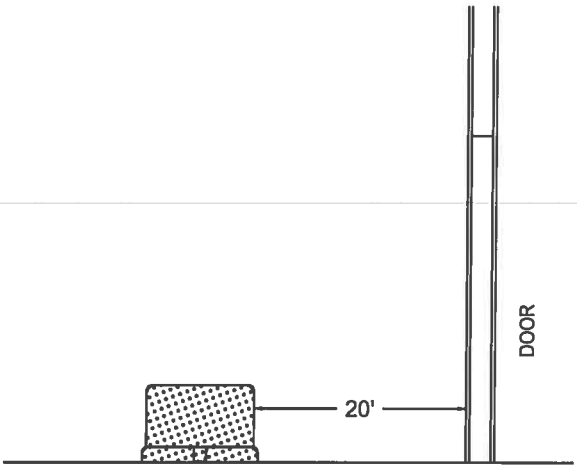

OIL FILLED EQUIPMENT CLEARANCES
FROM DOOR

* IF THIS IS AN EXIT OF A PUBLIC ASSEMBLY ROOM SUCH AS AN AUDITORIUM, CHANGE TO 25 FEET.

DRAWN: KCW	DVLPED: MRS DATE: 07/16/12	REVIEWED: MRS DATE: 07/17/12	APPRVD: JKP DATE: 07/19/12	NEXT REVIEW: 8/15	REV: _

PHI

DISTRIBUTION STANDARDS

CLEARANCES OF OIL FILLED EQUIPMENT TO BUILDINGS, WINDOWS, ETC., AND PROTECTION OF EQUIPMENT EXPOSED TO TRAFFIC

...\notes2F7F16\1738_FINAL.dgn 8/21/2012 6:27:11 AM

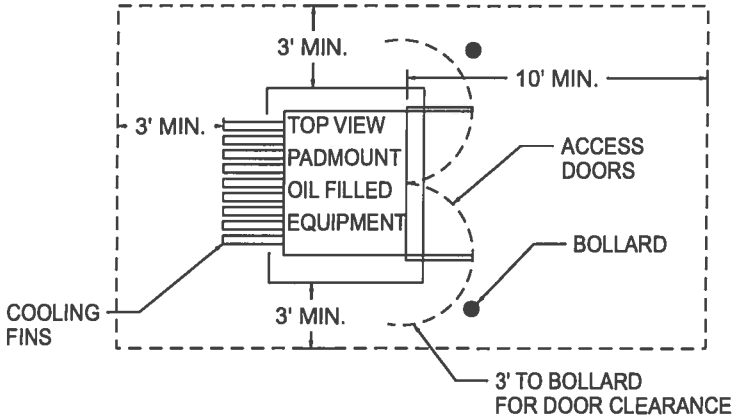

WORK CLEARANCES AROUND OIL FILLED EQUIPMENT

A MINIMUM CLEARANCE OF 10 FEET OF CLEAR, LEVEL WORKING SPACE IS REQUIRED IN FRONT OF OIL FILLED EQUIPMENT TO ALLOW USE OF HOT STICKS.
LANDSCAPING, FENCING AND OTHER OBSTRUCTIONS MUST NOT ENCROACH ON THESE CLEARANCES TO MAINTAIN 24/7/365 ACCESS.

BOLLARDS MAY BE REQUIRED IF OIL FILLED EQUIPMENT WILL BE EXPOSED TO TRAFFIC. BOLLARDS MUST BE INSTALLED AT ABOUT 3' FROM OIL FILLED EQUIPMENT TO MAINTAIN ACCESS DOOR CLEARANCE.
(SEE SHEET 4 OF 4)

BARRIERS:

BARRIERS CONSTRUCTED BY CUSTOMER FOR APPEARANCE OR FOR CLOSER POSITIONING OF OIL FILLED EQUIPMENT SHOULD BE AT LEAST 1 FOOT HIGHER THAN OIL FILLED EQUIPMENT. ENCLOSED BARRIERS, IF LOCKED, SHOULD BE ACCESSIBLE AT ALL TIMES WITH KEY FURNISHED TO PHI, OR WITH AN ON SITE KEY LOCATED IN A LOCK BOX LOCKED BY PHI.

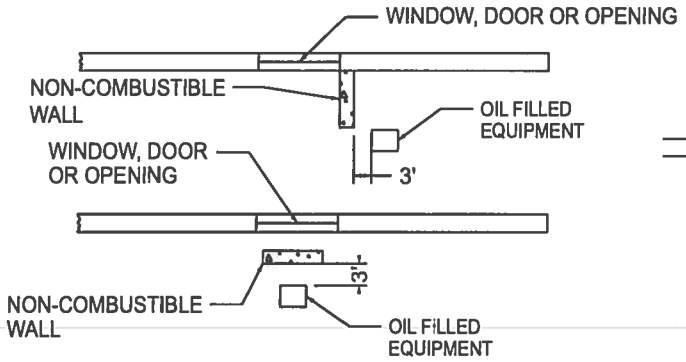

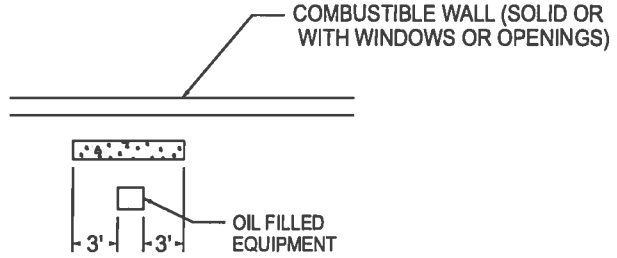

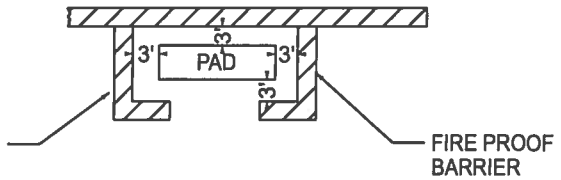

ENCLOSED AREA DESIGN MUST BE APPROVED BY ENGINEER BEFORE CONSTRUCTION (CANNOT BE COVERED)

DRAWN: KCW	DVLPED: MRS DATE: 07/16/12	REVIEWED: MRS DATE: 07/17/12	APPRVD: JKP DATE: 07/19/12	NEXT REVIEW: 8/15	REV: _

PHI

DISTRIBUTION STANDARDS

CLEARANCES OF OIL FILLED EQUIPMENT TO BUILDINGS, WINDOWS, ETC. AND PROTECTION OF EQUIPMENT EXPOSED TO TRAFFIC

J-380.3

NOTES:

1. TRANSFORMERS SHALL BE PROTECTED ON ALL SIDES EXPOSED TO VEHICULAR TRAFFIC.
2. PROTECTION MAY CONSIST OF THE FOLLOWING:
   - BOLLARDS - 10 FOOT, CONCRETE FILLED, 5 INCH OR LARGER (I.D.) GALVANIZED IRON PIPE WITH MINIMUM OF 1/4 INCH WALLS INSTALLED 5 FEET IN THE GROUND. SEE DETAIL A FOR PLACEMENT.
   - MASONRY WALL - MINIMUM OF 8 INCHES THICK AND 4 FEET HIGH WITH AREA IN FRONT OPEN FOR ACCESS. SEE DETAIL B FOR MINIMUM CLEARANCES.

NOTES:

A. MINIMUM CLEARANCE FROM REAR OF PAD
B. MINIMUM CLEARANCE FROM SIDE OF PAD
C. MINIMUM CLEARANCE FROM FRONT OF PAD
D. MINIMUM CLEARANCE FROM REAR OF PAD
E. 4' MAXIMUM CLEARANCE
F. 10 FEET OF UNOBSTRUCTED AREA IN FRONT OF PAD, EXCEPT FOR BOLLARDS, SHALL BE MAINTAINED
G. RIGHT SIDE PROTECTION SAME AS LEFT

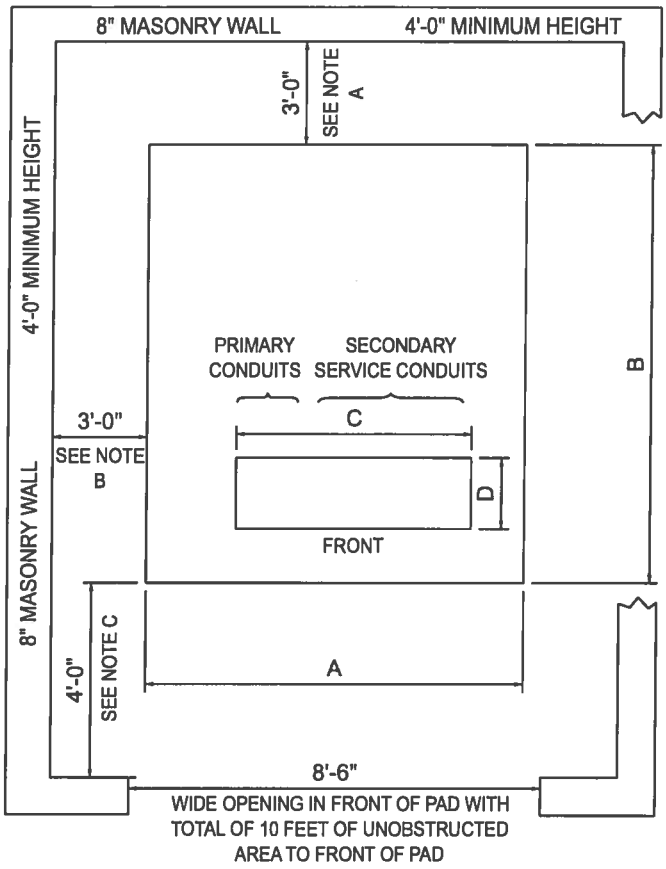

DETAIL B

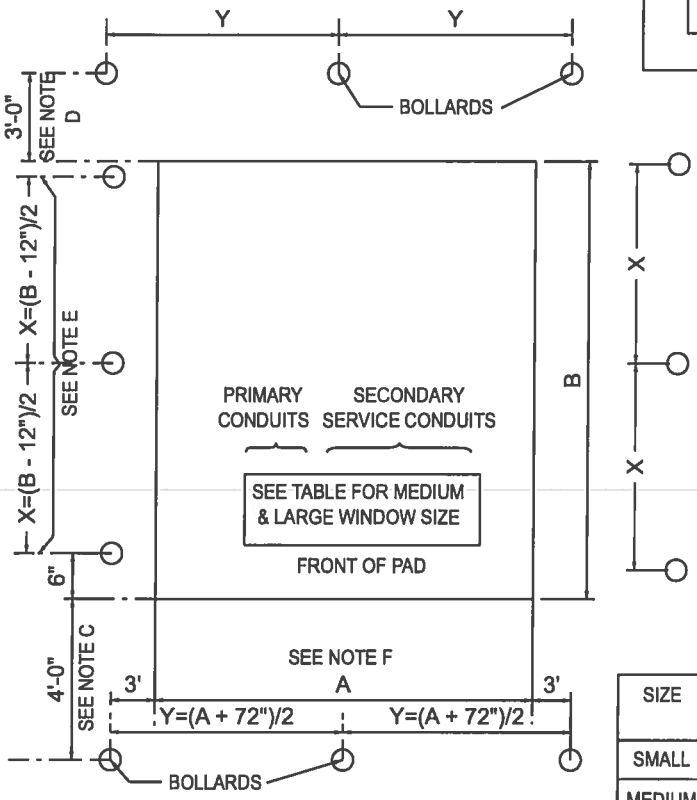

DETAIL A

SIZE	ACE/DPL STOCK NO.	PEPCO STOCK NO.	PAD SIZE A X B	WINDOW SIZE C X D
SMALL	0112-2852	9721-0699	90"W X 76"D	56"W X 18"D
MEDIUM	0132-6974	9721-0698	90"W X 90"D	60"W X 20"D
LARGE	0132-6982	9721-0697	106"W X 105"D	60"W X 20"D

DRAWN: KCW	DVLPED: MRS DATE: 07/16/12	REVIEWED: MRS DATE: 07/17/12	APPRVD: JKP DATE: 07/19/12	NEXT REVIEW: 8/15	REV: _

PHI

DISTRIBUTION STANDARDS

CLEARANCES OF OIL FILLED EQUIPMENT TO BUILDINGS, WINDOWS, ETC. AND PROTECTION OF EQUIPMENT EXPOSED TO TRAFFIC

...\notes2F7F16\1738_FINAL.dgn 8/21/2012 6:29:36 AM

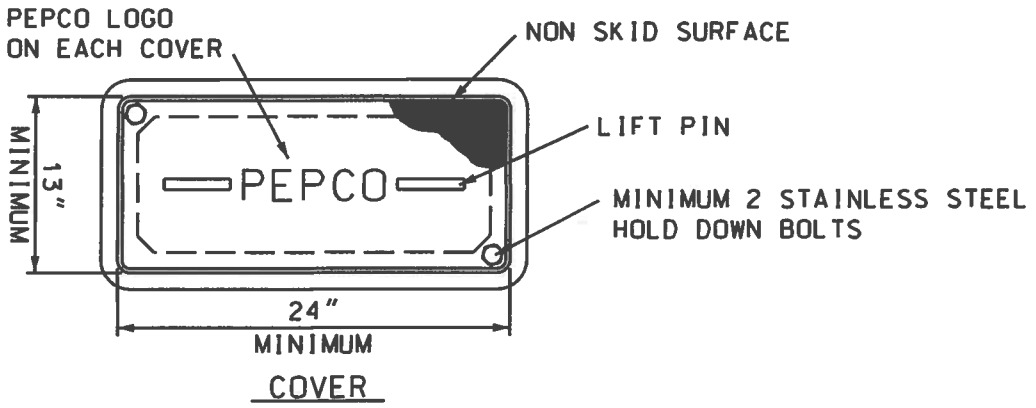

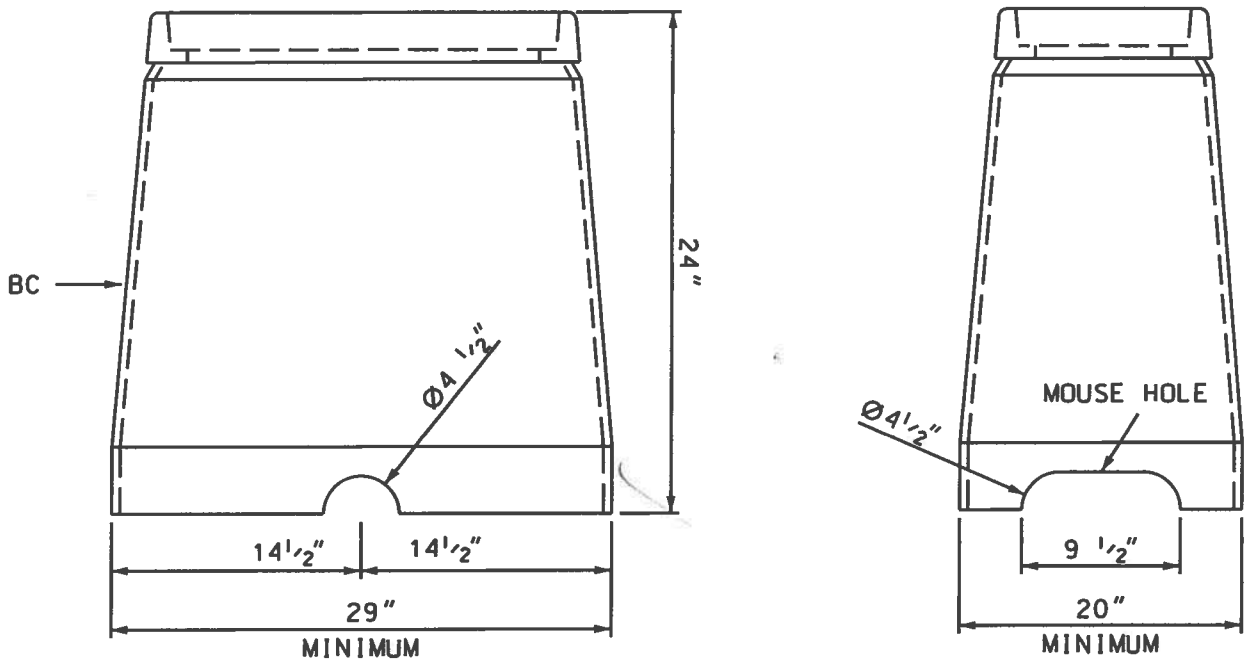

ITEM	STOCK NO.	DESCRIPTION	QUANTITY
BC	9718-8064	SL SPLICE BOX 13" X 24" X 24"	1

NOTE:

1. SPLICE BOX SHALL BE DESIGNED FOR LIGHT TRUCK LOADING PER ASTM C857.
2. REV A: CHANGED DWG FORMAT. CHANGED STOCK NO'S PER WMIS.

DRAWN: DPJ	DVLPED: DR DATE: 04-09-02	REVIEWED:RLH DATE: 04/22/14	APPRVD: AAT DATE: 04/22/14	NEXT REVIEW: 04/19	REV: A

PHI PEPCO

POWER DISTRIBUTION STANDARDS

STREET LIGHT SPLICE BOX (MINIMUM 13"x 24"x 24")

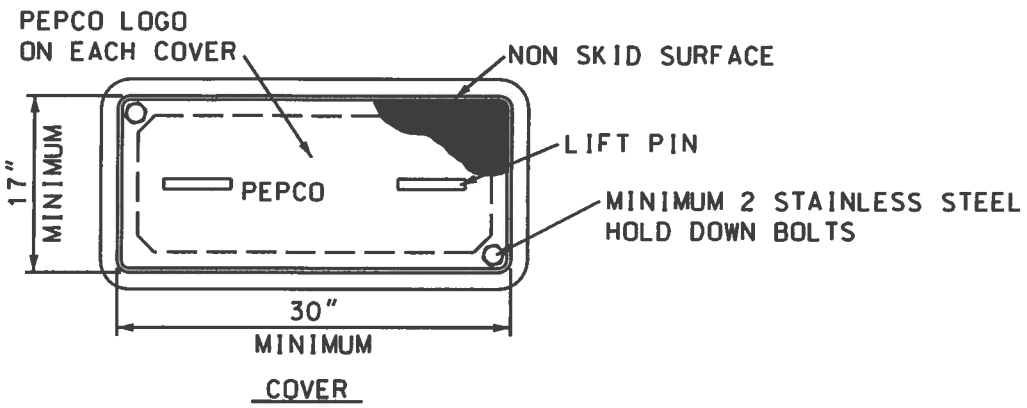

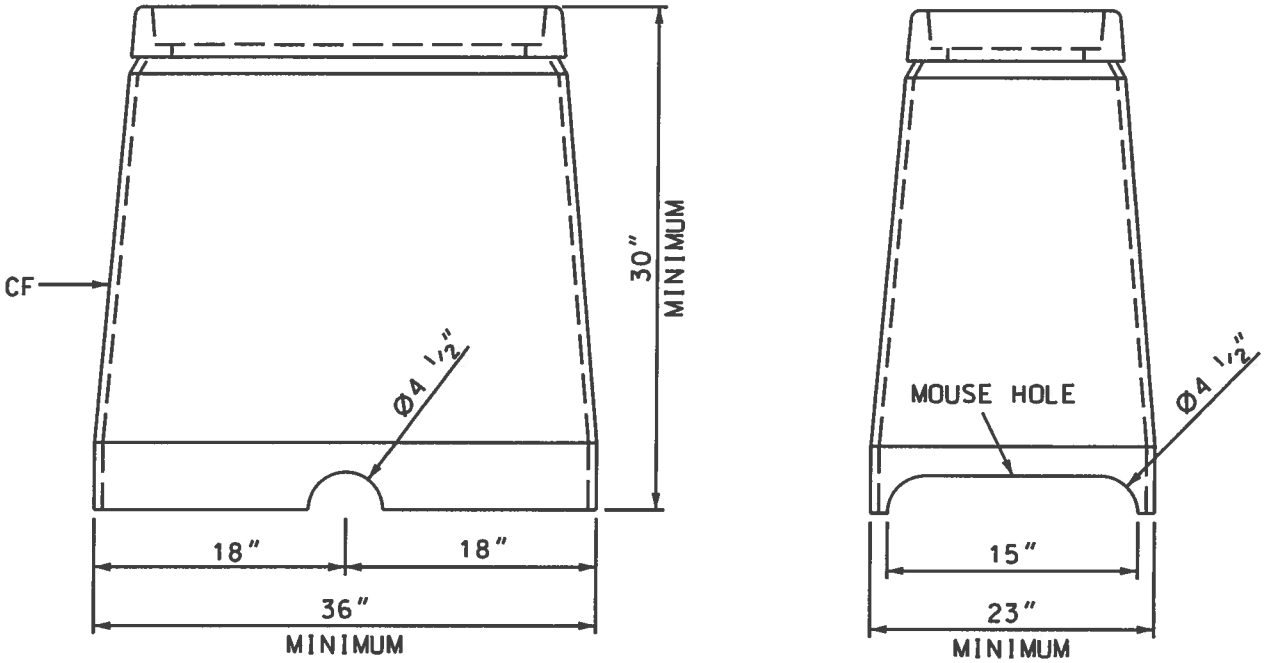

ITEM	STOCK NO.	DESCRIPTION	QUANTITY
CF	9718-8065	SC SPLICE BOX 17" X 30" X 30"	1

NOTE:

1. SPLICE BOX SHALL BE DESIGNED FOR LIGHT TRUCK LOADING PER ASTM C857.
2. REV A: CHANGED DWG FORMAT. CHANGED STOCK NO'S PER WMIS.

DRAWN: DPJ	DVLPED: DR DATE: 04-09-02	REVIEWED: RLH DATE: 04/22/14	APPRVD: AAT DATE: 04/22/14	NEXT REVIEW: 04/19	REV: A

PHI PEPCO

POWER DISTRIBUTION STANDARDS

SECONDARY SPLICE BOX (MINIMUM 17"x 30"x 30")

1695.3.3

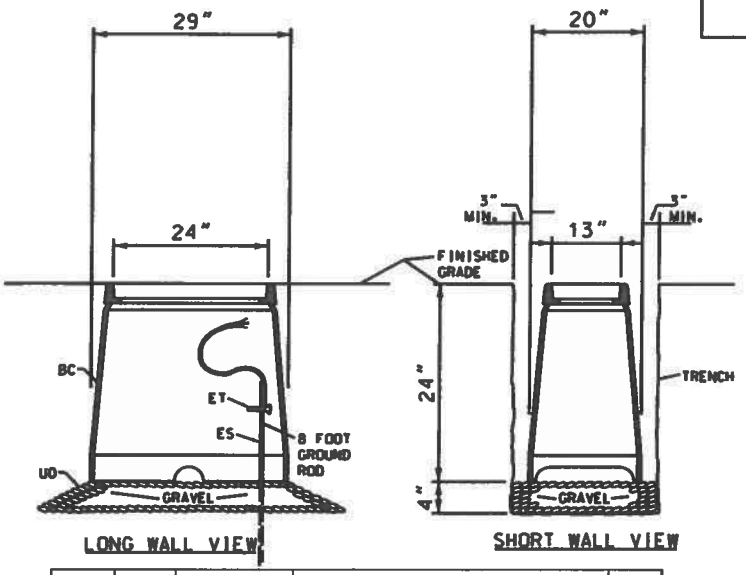

QTY	ITEM	STOCK NO.	DESCRIPTION	IU
1	BC	9718-8064	SL SPLICE BOX 13" X 24" X 24"	EA.
1	ES	9713-0112	GROUND ROD, 5/8" X 8'	EA.
1	ET	9713-0113	CLAMP, CW GROUND, 5/8"	EA.
1	UQ	NON-STOCK	BANK RUN GRAVEL	EA.
	SLSBQB		STREET LIGHT SPLICEBOX AR URB	
	SLSBQU		STREET LIGHT SPLICEBOX AR URD	
	SLSBQY		STREET LIGHT SPLICEBOX AR CO	

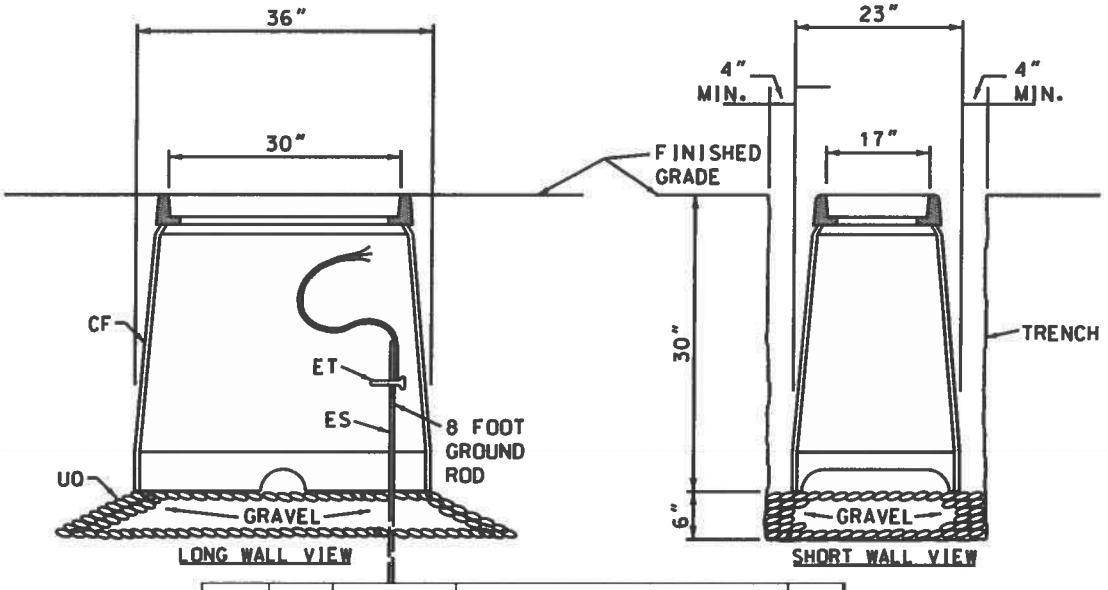

QTY	ITEM	STOCK NO.	DESCRIPTION	IU
1	CF	9718-8065	SC SPLICE BOX 17" X 30" X30"	EA.
1	ES	9713-0112	GROUND ROD, 5/8" X 8'	EA.
1	ET	9713-0113	CLAMP, CW GROUND, 5/8"	EA.
1	UQ	NON-STOCK	BANK RUN GRAVEL	EA.
	SSBMB		SECONDARY SPLICEBOX AR URB	
	SSBMU		SECONDARY SPLICEBOX AR URD	
	SSBMY		SECONDARY SPLICEBOX AR CO	

DRAWN: RLH	DVLPED: DR	DATE: 04/09/02	REVIEWED: RLH	DATE: 04/22/14	APPRVD: AAT	DATE: 04/22/14	NEXT REVIEW: 04/19	REV: B

PHI PEPCO

POWER DISTRIBUTION STANDARDS

INSTALLATION OF SPLICE BOXES AND DIMENSIONS

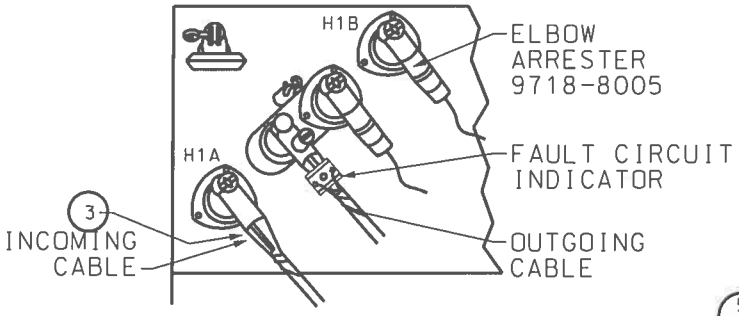

DETAIL A
OPEN POINT INSTALLATION WITH
PARKING STAND ARRESTER

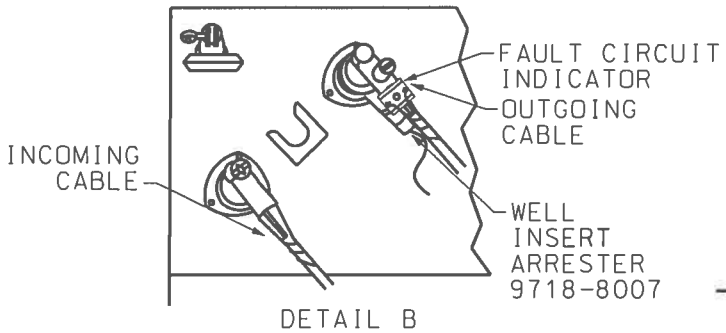

DETAIL B
LOOP SYSTEM INSTALLATION WITH
WELL INSERT ARRESTER

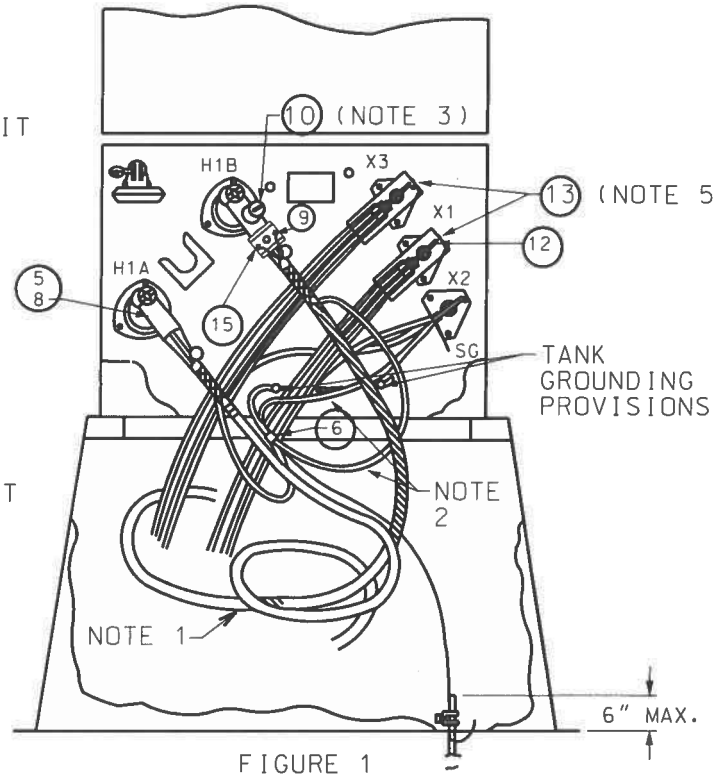

FIGURE 1

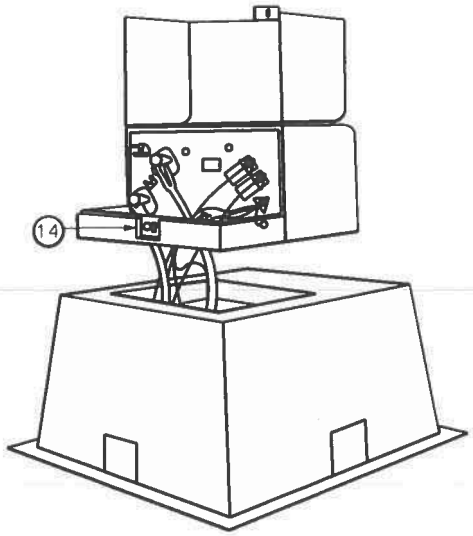

NOTES:

1. LEAVE 10 FT. PRIMARY CABLE SLACK PER LEG AND COIL IT IN BOTTOM OF BOXPAD.

2. WHEN GROUNDING PRIMARY CABLE AS SHOWN IN FIG.1. LEAVE SUFFICIENT SLACK (4 FT MIN.) OF CONCENTRIC NEUTRAL TO PERMIT OPERATION OF ELBOW TERMINATORS.

3. INSTALL FAULT CIRCUIT INDICATOR (FCI) ON OUT GOING CABLE, REFER TO DWG#1741.

4. INSTALLATION OF ARRESTERS:
   a. AT THE OPEN POINT OF A LOOP, INSTALL (2) ELBOW ARRESTERS (9718-8005) AND (1)DOUBLE FEED THROUGH PARKING BUSHING (9718-8124) AS SHOWN IN DETAIL 'A'.
   b. IN THE CASE OF A RADIAL TAP FROM AN OVERHEAD FEEDER, INSTALL(1) ELBOW ARRESTER ON H1B BUSHING AT THE LAST TRANSFORMER.
   c. AT THE TRANSFORMER ADJACENT TO THE OPEN POINT OF A LOOP INSTALL (1) WELL INSERT ARRESTER(9718-8007) AS SHOWN IN DETAIL B. THE WELL INSERT ARRESTER IS TO BE INSTALLED WITH A TORQUE TOOL (97142090).
   d. CONNECT ARRESTER'S FLEXIBLE GROUND LEAD TO GROUND BUS WITH "HOTLINE"CLAMP (9713-1547).

5. INSTALL SECONDARY COVERS (ITEM YK) ON SECONDARY BUSHINGS X1 AND X3 TO INSURE DEAD FRONT REQUIREMENTS.

6. THE TANK GROUND TO X2 CONNECTION SHALL BE PROVIDED BY PEPCO WITH #2 COPPER WIRE (ITEM MV).

REV D: ADDITION OF FAULT CIRCUIT INDICATOR

DRAWN: KCW	DVLPED: AWA DATE: 09/06/07	REVIEWED: SAT DATE: 01/25/13	APPRVD: JKP DATE: 01/31/13	NEXT REVIEW: 01/16	REV: D

PHI

DISTRIBUTION STANDARDS

SINGLE PHASE LOW PROFILE PADMOUNT TRANSFORMER INSTALLATION

1252.2.4

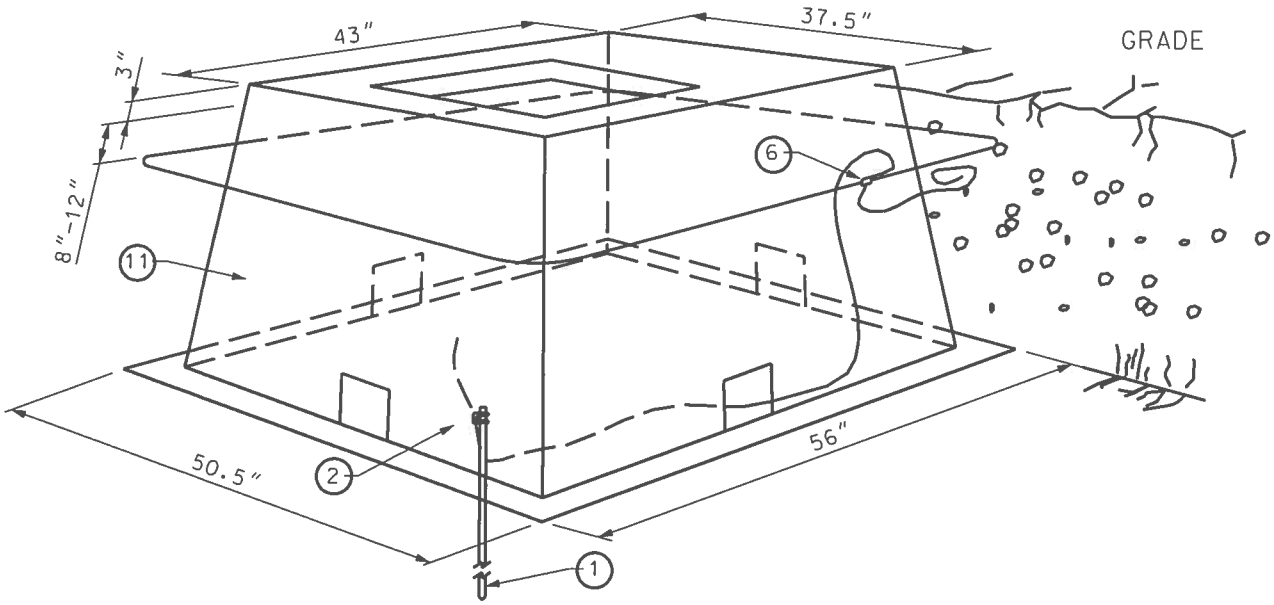

NOTES:

1. THE FRONT EDGE OF THE BOXPAD (LABELED FRONT) AND CONSEQUENTLY THE FRONT OF THE TRANSFORMER SHOULD BE ORIENTED IN SUCH A WAY AS TO PROVIDE A MINIMUM OF 10 FT OF RELATIVELY FLAT HORIZONTAL GROUND IN FRONT FOR OPERATING PURPOSES.

2. THE BOXPAD SHOULD BE LEVELED BEFORE THE TRANSFORMER IS INSTALLED.

3. INSTALL #2 BARE COPPER GROUND WIRE (ITEM MV) WITHOUT BREAKING CONTINUITY AS SHOWN ON GROUNDING DETAIL B. LEAVE 3 FT MIN. OF GROUND WIRE SLACK WITHIN BOXPAD TO BE CONNECTED TO THE PRIMARY NEUTRAL.

4. INSTALL GROUND ROD (ITEM ES) AND GROUND ROD CLAMP (ITEM ET) A MAXIMUM OF 6" ABOVE THE BOTTOM FLANGE OF THE BOXPAD.

5. ACCESSORIES TO THE BOXPAD INCLUDE THE BOXPAD 4" SPACER (9718-8036), THE 10" SPACER (9718-8037), AND THE BOXPAD COVER (9718-8038).

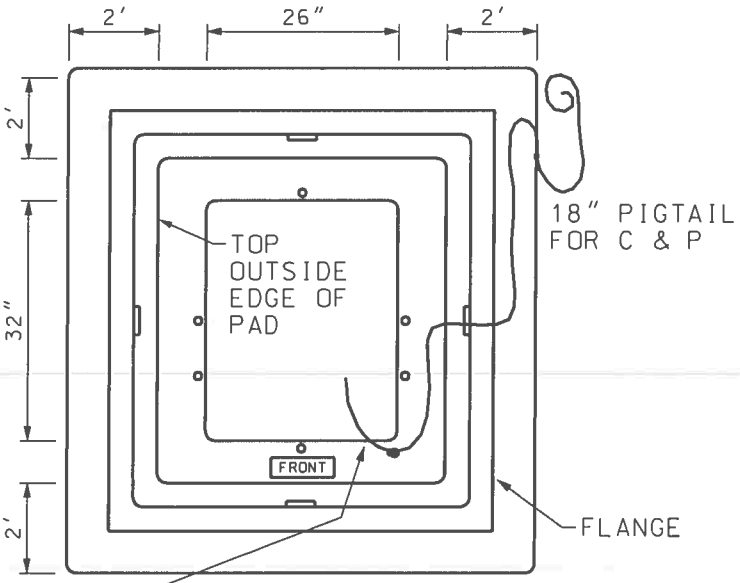

DETAIL B
GROUNDING MAT

REV. D: ADDITION OF FAULT CIRCUIT INDICATOR

DRAWN: KCW	DVLPED: AWA DATE: 09/06/07	REVIEWED: SAT DATE: 01/25/13	APPRVD: JKP DATE: 01/31/13	NEXT REVIEW: 01/16	REV: D

PHI

DISTRIBUTION STANDARDS

SINGLE PHASE LOW PROFILE PADMOUNT TRANSFORMER INSTALLATION

NOTES:

1. *WHEN WORK IS TO BE DONE BY OTHER THAN URB, THE DESIGNER IS TO SELECT THE APPROPRIATE COMPATIBLE UNITS FOR THE AREA TO DO THE JOB.

PMT1PH*	C.U. MACRO - 1PH PADMOUNT TRANSFORMER INSTALLATION	
QTY	COMPATIBLE UNIT	DESCRIPTION
1	PMBPMB	PADMT TRNS BX PD D19 ML URB
1	PMTINSTMB	PDMT TRNSF 1PH CON TS35 ML URB
1	FCI46LED1P	FAULT CIRCUIT INDICATOR W/ LED, 1 PHASE

EA DESIGNATION: PMT1PH* - PDMT TRNSF 1PH ASSEMBLY URB

FCI46LED1P	PMBPMB*	PMTINSTMB*	COMPATIBLE UNIT BREAKDOWN - 1PH PADMOUNT INSTALLATION		
QTY.			ITEM	STOCK NO.	DESCRIPTION
	1		1	9713-0112	ROD, CW, 5/8" X 8', GRD
	1	1	2	9713-0113	CLAMP, BRZ, 5/8", GRD
		1	3	9739-0679	TAG, PL, HV CABLE
	30	1	4	9711-3211	WIRE, CU, #2, SD
		1	5	9718-8121	ELBOW, RBR, 200A, LB
	1	1	6	9717-2473	CRIMPIT, CU, # 2
		1	7	9717-2113	HYLUG, CU, #2, 1-HOLE
		2	8	9717-2429	CONN, CU, #2, ELBOW
		1	9	9718-8102	ELBOW, RBR, W/T.P., LB
		1	10	9718-8117	FAULT IND F/T.P.ELBW
	1		11	9718-8035	BOX PAD, FBRGL, 1PH
		3	12	9717-2490	SPADE, CU, 4H, F/1" STUD
		2	13	9718-8173	COVR, PL. 4H SEC. SPADE
		1	14	9739-0164	PADLOCK,BR,7/8" SHKL
1			15	9713-3009	FAULT CIRCUIT INDICATOR W/ LED, 1PHASE

CU DESCRIPTION:

PMTINSTMB* - PDMT TRNSF 1PH CON TS35 ML URB PMBPMB* - PADMT TRNS BX PD D19 ML URB

25PMBXB*	50PMBXB*	75PMBXB*	100PMBXB*	167PMBXB*	25PMGBXB*	50PMGBXB*	75PMGBXB*	100PMGBXB*	CU BREAKDOWN - 1PH LOW PROFILE PADMOUNT TRANSFORMERS	
QUANTITY									STOCK NO.	DESCRIPTION
1									9747-0715	76120/240 PM100250
	1								9747-0716	76120/240 PM100500
		1							9747-0718	76120/240 PM100750
			1						9747-0767	76120/240 PM101000
				1					9747-0709	76120/240 PM101670
					1				9747-0761	DV120/240 PM100250
						1			9747-0763	DV120/240 PM100500
							1		9747-0714	DV120/240 PM100750
								1	9747-0717	DV120/240 PM101000

CU DESCRIPTION:

100PMGBXB* -100KVA DV 250/125V 1PH PM URB
75PMGBXB* - 75KVA DV 250/125V 1PH PM URB
50PMGBXB* - 50KVA DV 250/125V 1PH PM URB
25PMGBXB* - 25KVA DV 250/125V 1PH PM URB

167PMBXB* - 167KVA TR 250/125V 1PH PM URB
100PMBXB* - 100KVA TR 250/125V 1PH PM URB
75PMBXB* - 75KVA TR 250/125V 1PH PM URB
50PMBXB* - 50KVA TR 250/125V 1PH PM URB
25PMBXB* - 25KVA TR 250/125V 1PH PM URB

REV D: ADDITION OF FAULT CIRCUIT INDICATOR

DRAWN:KCW	DVLPED:AWA DATE:09/06/07	REVIEWED:SAT DATE:01/25/13	APPRVD:JKP DATE:01/31/13	NEXT REVIEW:01/16	REV: D

PHI

DISTRIBUTION STANDARDS

SINGLE PHASE LOW PROFILE PADMOUNT TRANSFORMER INSTALLATION

1252.4.4

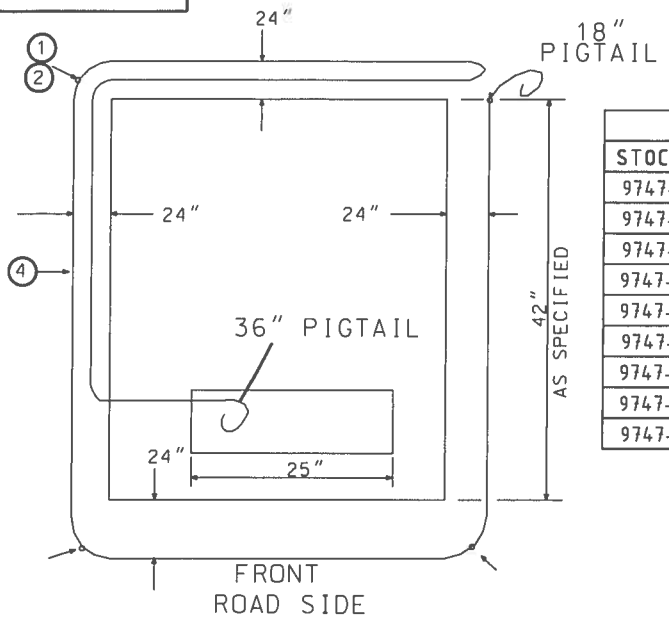

GROUNDING PLAN

(SEE NOTE 2)

SINGLE PHASE PADMOUNT TRANSFORMER FUSING SCHEDULE				
STOCK NO	(KVA)	VOLTAGE	STOCK NO.	CATALOG NO.
9747-0715	25	13750Y/7940	9726-0801	4038108C03
9747-0716	50	13750Y/7940	9726-0802	4038108C05
9747-0718	75	13750Y/7940	9726-0803	4038108C06
9747-0767	100	13750Y/7940	9726-0804	4038108C07
9747-0709	167	13750Y/7940	9726-0805	4038108C09
9747-0761	25	13750Y/7940X4325Y/2500	9726-0803	4038108C06
9747-0763	50	13750Y/7940X4325Y/2500	9726-0805	4038108C09
9747-0714	75	13750Y/7940X4325Y/2500	9726-0806	4038108C11
9747-0717	100	13750Y/7940X4325Y/2500	9726-0807	4038108C12

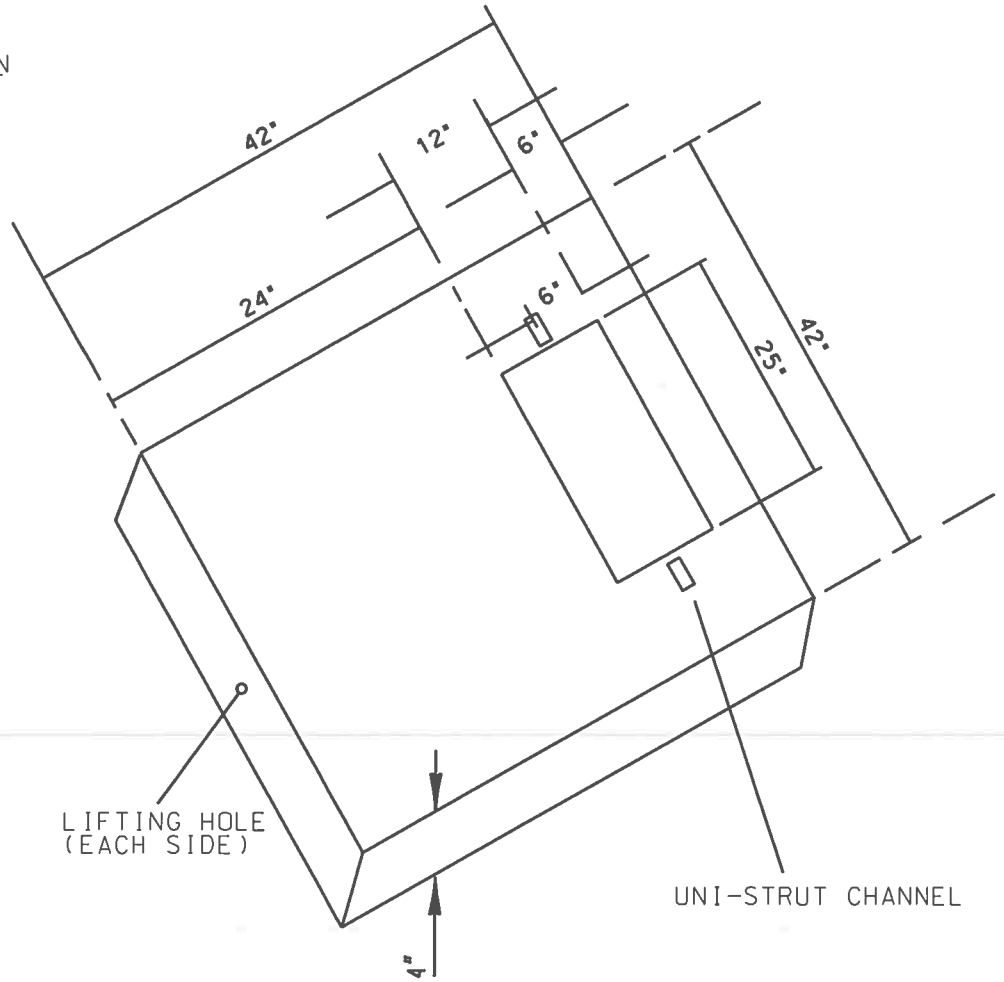

NOTES:

1. USE BUMPER PIPES AS NECESSARY TO PROTECT PADMOUNTED TRANSFORMERS NEAR DRIVEWAY AND PARKING AREAS.
2. GROUNDING PLAN IS TO BURY A GROUND WIRE 24" OFF THE PAD ALL AROUND 10" IN DEPTH.
3. SEE DWG #0887 FOR SUBSURFACE TRANSFORMER INSTALLATION.

REV D: ADDITION OF FAULT CIRCUIT INDICATOR

DRAWN: KCW	DVLPED: AWA DATE: 09/06/07	REVIEWED: SAT DATE: 01/25/13	APPRVD: JKP DATE: 01/31/13	NEXT REVIEW: 01/16	REV: D

PHI

DISTRIBUTION STANDARDS

MOUNTING PADS FOR CONVERTING OF SUBSURFACE TRANSFORMER TO SINGLE PHASE PADMOUNT TRANSFORMER / FUSING SCHEDULE

2-2-0655.1

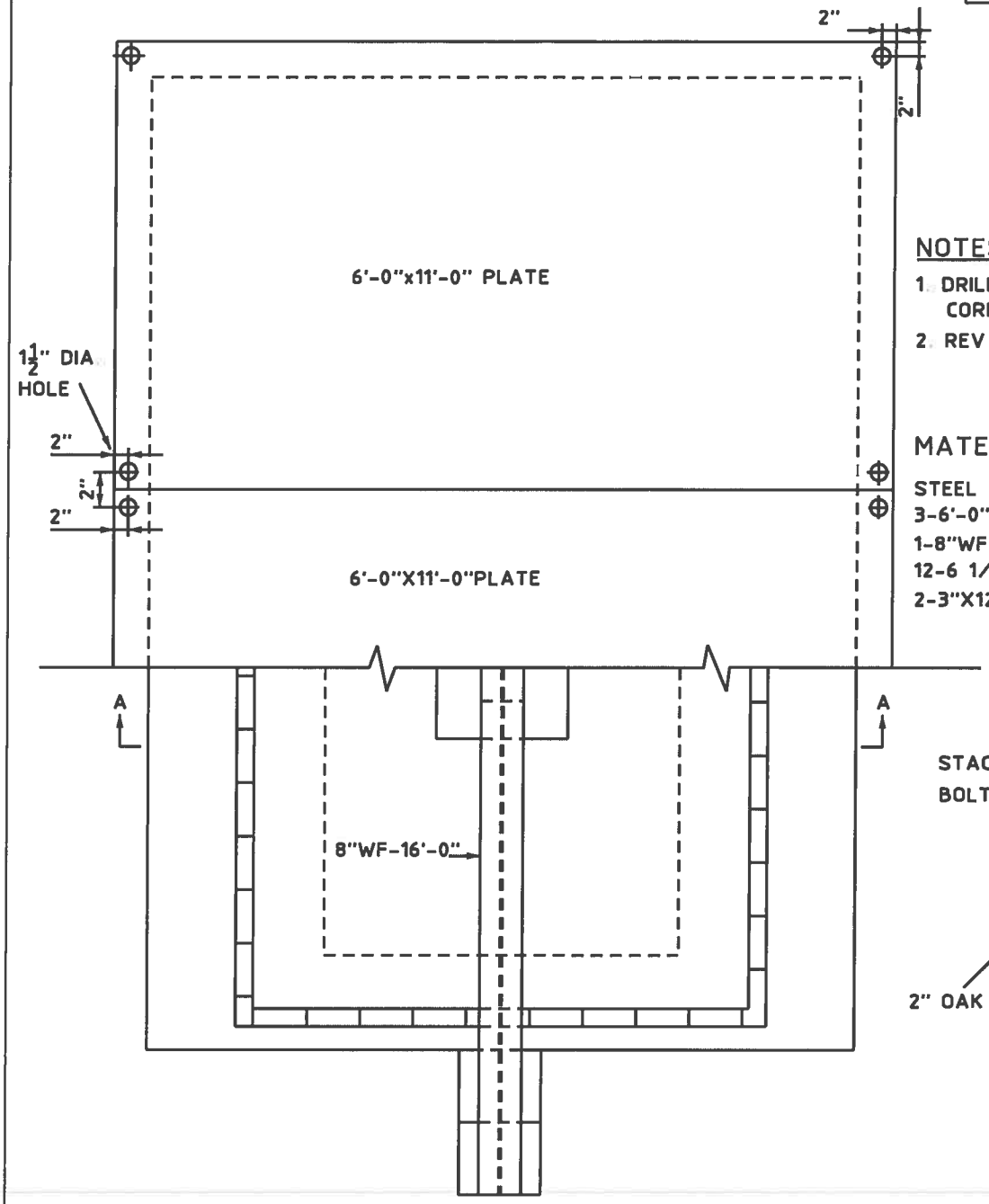

PLAN

NOTES

1. DRILL ROADWAY AND SPIKE EACH CORNER OF PALTE
2. REV A CHANGED DWG FORMAT

MATERIAL

STEEL PLATES
3-6'-0"X11'-0"X3/4"PLATES
1-8"WF-35"BEAMS,16"-0"LONG
12-6 1/2"X5/8"R.R.SPIKES
2-3"X12"X29"SILLS

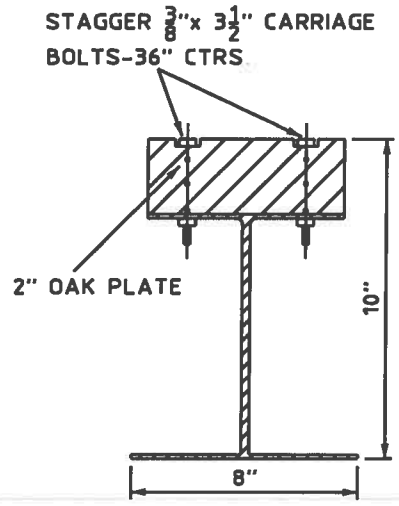

DETAIL"A"

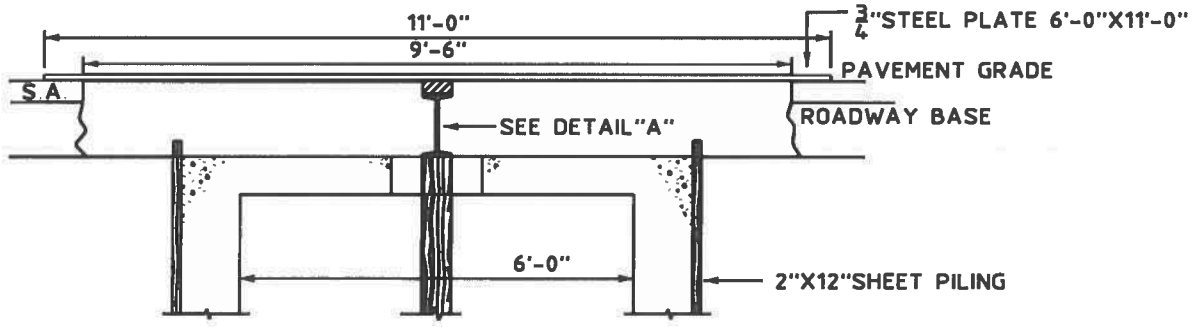

SECTION A-A

DRAWN: AIPL	DVLPED: SWW DATE: 7/15/08	REVIEWED: TDY DATE: 1/14/09	APPRVD: MDW DATE: 1/16/09	NEXT REVIEW: 1/12	REV: A

PHI PEPCO

POWER DISTRIBUTION STANDARDS

TYPICAL BRIDGING FOR 6'-0" X 10'-0" ROADWAY MANHOLE

...\desktop\2-2-0655_1.1.dgn 3/8/2010 8:44:01 AM

2-2-1097.1.1

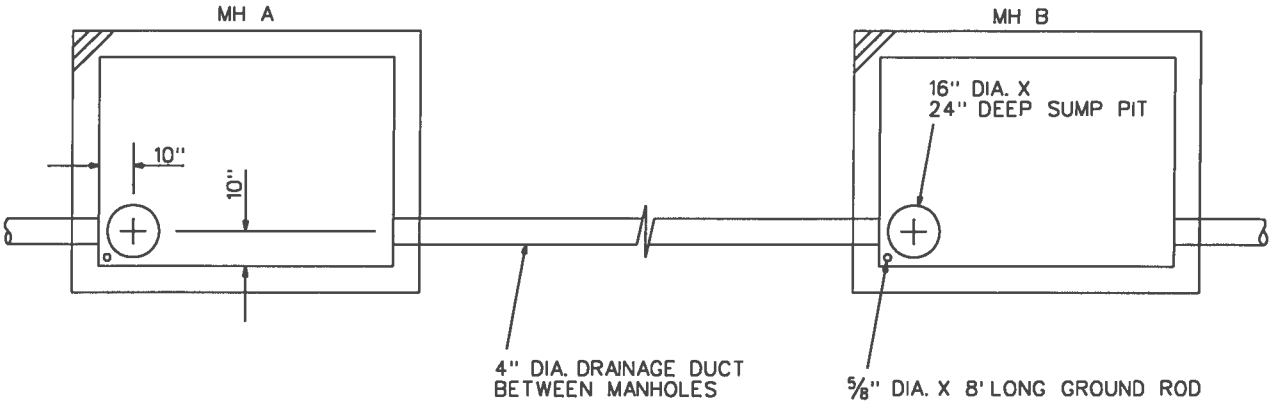

PLAN VIEW

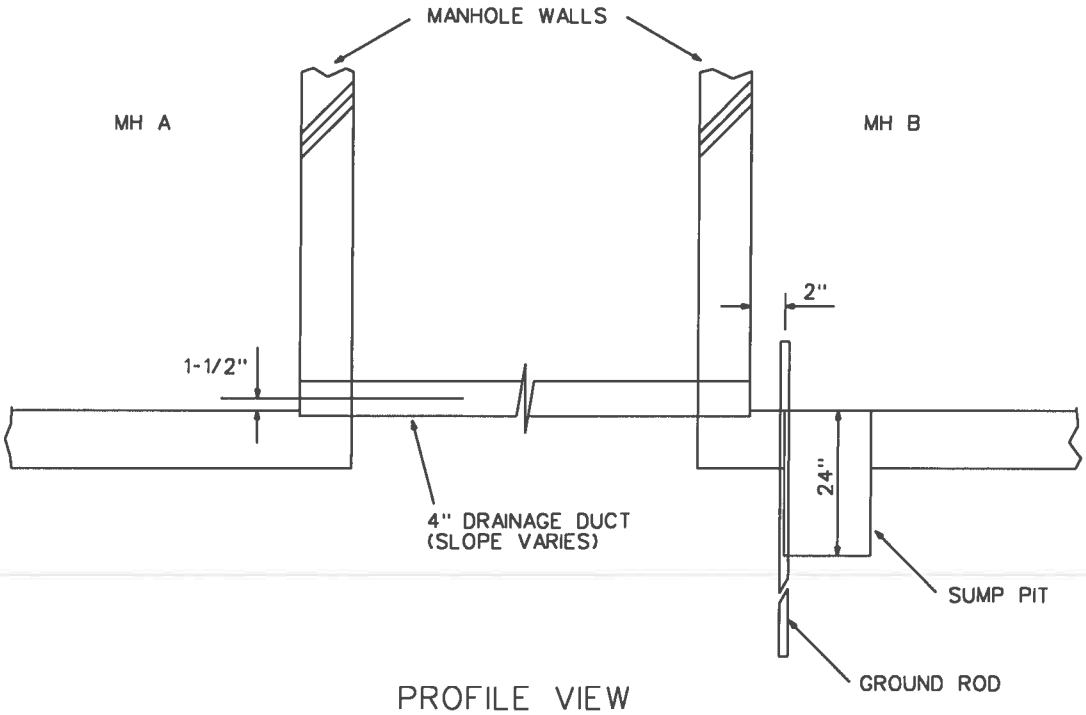

PROFILE VIEW

NOTES:

1. REFER TO DWG. 2-2-1060.1.1 FOR SUMP PIT CONSTRUCTION.
2. REFER TO DWG. 2-2-1096.1.1 FOR GROUNDING CONSTRUCTION.
3. REV. B: REMOVED GUTTER, CHANGED SUMP DIA. AND DRAWING NUMBERS.

DRAWN: RLH	DVLPED: JC DATE: 08-08-91	REVIEWED: RLH DATE: 10-15-08	APPRVD: MDW DATE: 10-15-08	NEXT REVIEW: 10-11	REV: B

pepco DISTRIBUTION STANDARDS

DRAINAGE DUCT BETWEEN ADJACENT MANHOLES

...\2-2-1097.1.1.DGN 10/16/2008 9:55:49 AM

2-2-0493.1.1

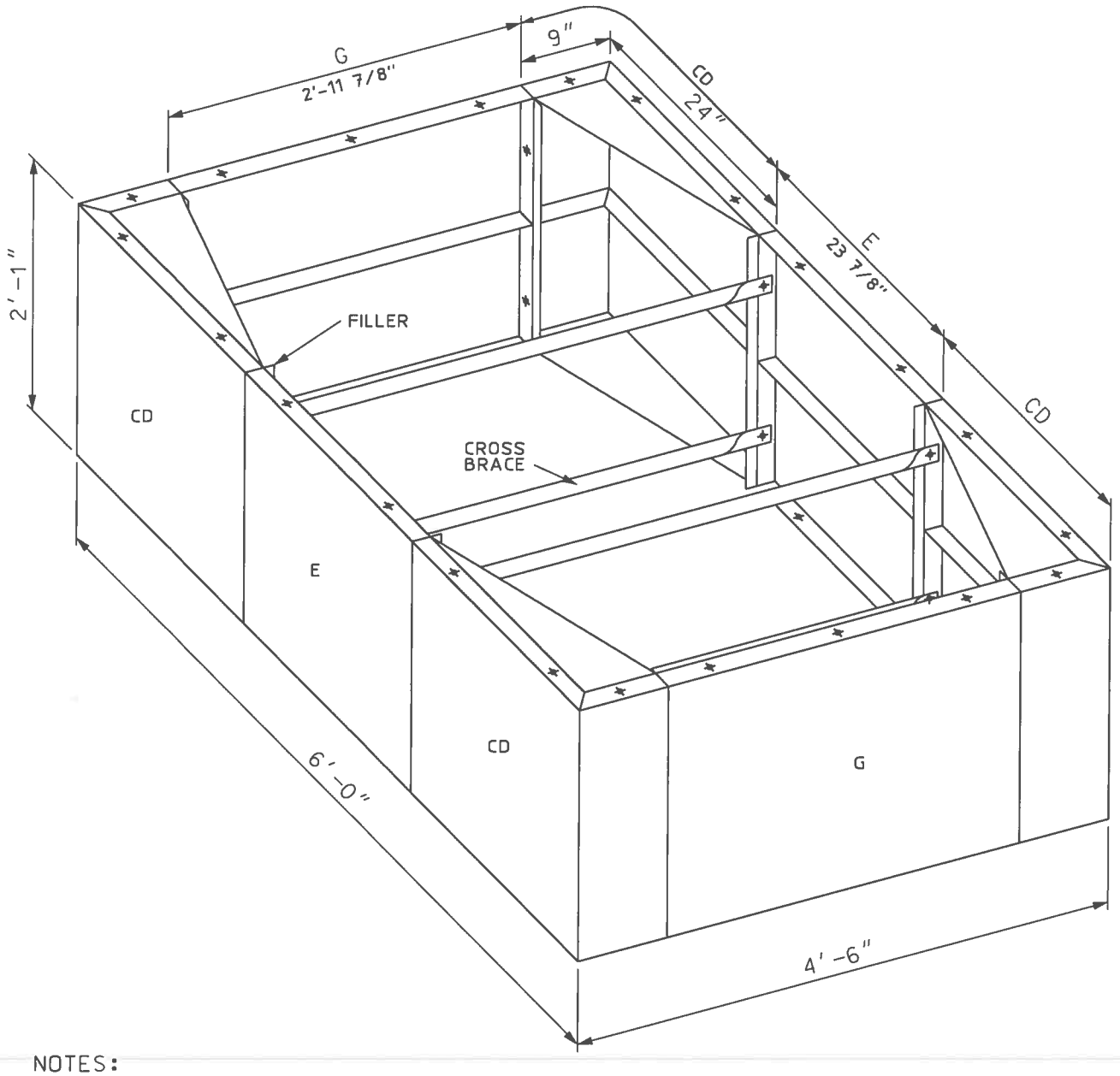

NOTES:

FOR ONE COMPLETE 4'-6" x 6'-0" MANHDLE FORM 6'-5" DEEP. THREE (3) SECTIONS ARE REQUIRED AS SHOWN MADE UP OF THE FOLLOWING:

12	CD	PANELS
6	E	PANELS
6	G	PANELS
24		FILLERS 2'-0 1/2"
12		CROSS BRACES 4'-3 1/4"
44		SLOTTED PINS

EACH PANELS OF FORM IS 2'-1" HIGH
REV A: CHANGED DRAWING FORMAT.

THIS DWG. SUPERSEDES DWG. OF SAME NO. DATED 7-30-48

DRAWN: DPJ	DVLPED: ALH DATE: 07-30-48	REVIEWED: TWM DATE: 10-15-08	APPRVD: MDW DATE: 10-29-08	NEXT REVIEW: 10-11	REV: A

PHI PEPCO

POWER DISTRIBUTION STANDARDS

STEEL FORM FOR 4'-6" X 6'-0" MANHOLE

2-2-0496.1

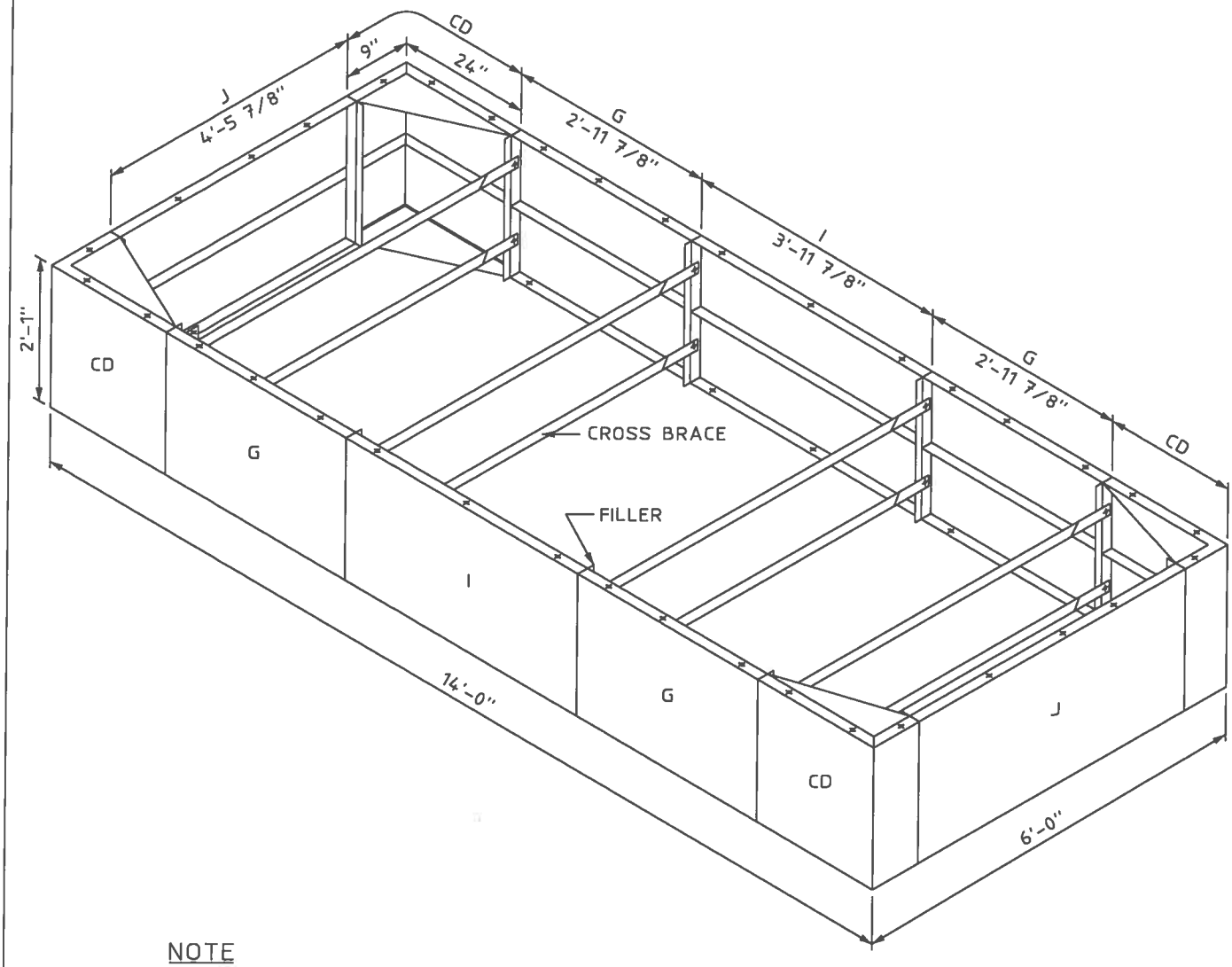

NOTE

FOR ONE COMPLETE 6'-0"x14'-0" MANHOLE FORM 7'-6" DEEP, FOUR (4) SECTIONS ARE REQUIRED AS SHOWN, MADE UP OF THE FOLLOWING:

3 SECTIONS OF 2'-1" PANELS

12	CD	PANELS
6	J	PANELS & 36 FILLERS
12	G	PANELS
6	I	PANELS

1 SECTION OF 12" PANELS

4	CD	PANELS
2	J	PANELS & 12 FILLERS
4	G	PANELS
2	I	PANELS
32		CROSS BRACES 5'-9 7/8"
108		SLOTTED PINS

REV A: CHANGED DRAWING FORMAT

DRAWN: AIPL	DVLPED: ALH DATE: 07-30-48	REVIEWED: TDY DATE: 1/22/09	APPRVD: MDW DATE: 1/26/09	NEXT REVIEW: 1/12	REV: A

PHI PEPCO

POWER DISTRIBUTION STANDARDS

STEEL FORM FOR 6'-0"X14'-0" MANHOLE

2-2-1171.1.1

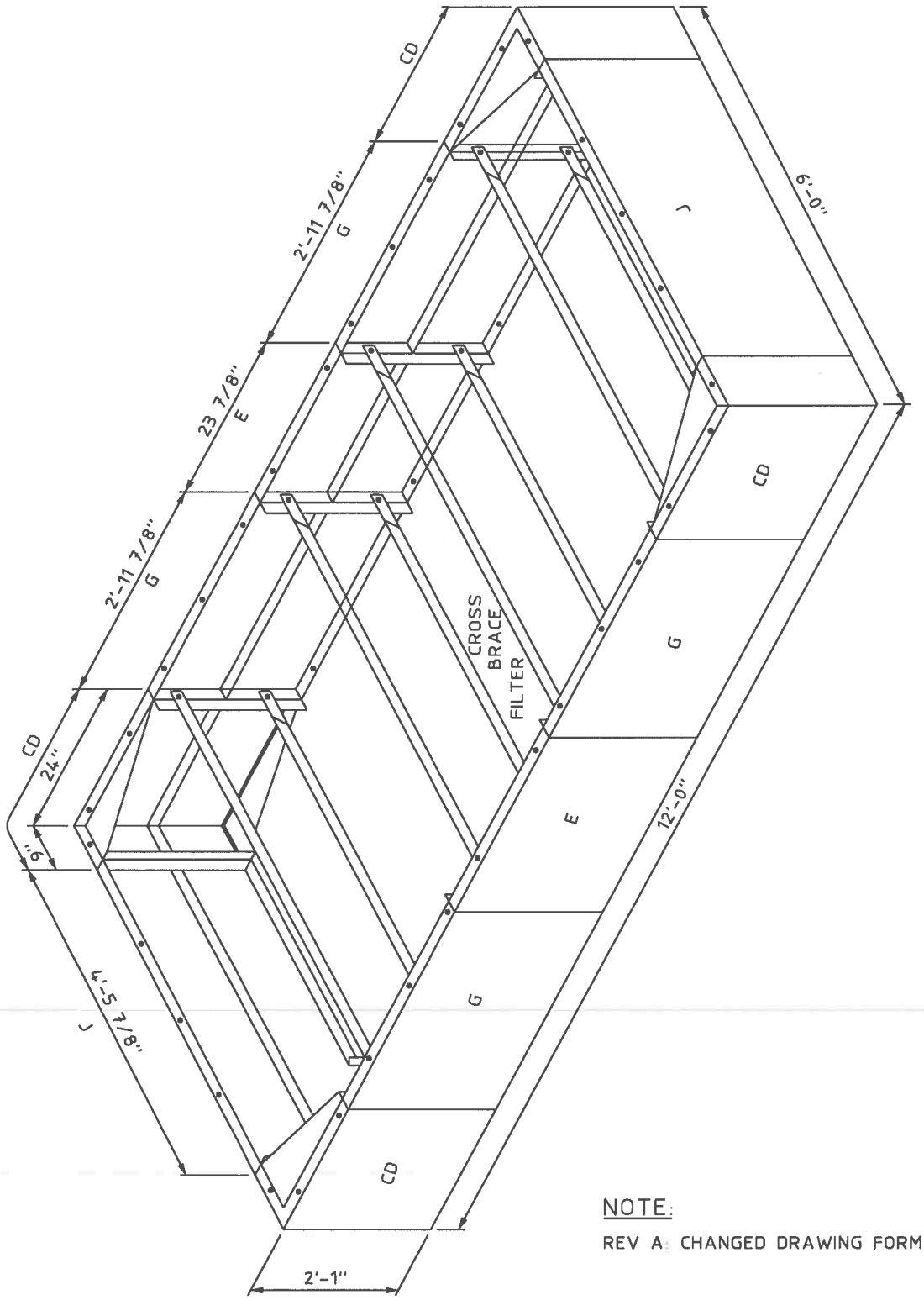

THIS DWG. SUPERSEDES DWG. OF SAME NO. DATED 3-14-80

NOTE:

REV A: CHANGED DRAWING FORMAT.

DRAWN: AIPL	DVLPED: CEG DATE: 4/23/79	REVIEWED: TDY DATE: 10/2/08	APPRVD: MDW DATE: 10/9/08	NEXT REVIEW: 11/11	REV: A

PHI PEPCO

POWER DISTRIBUTION STANDARDS

STEEL FORM FOR 6'-0" X 12'-0" MANHOLE

2-2-1386.1.2

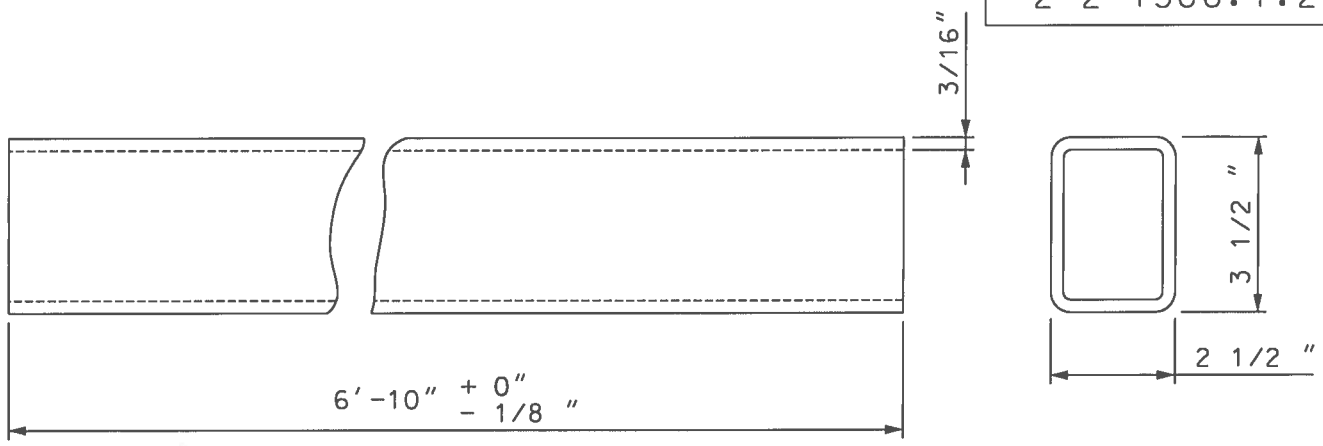

SIDEWALK SPACER

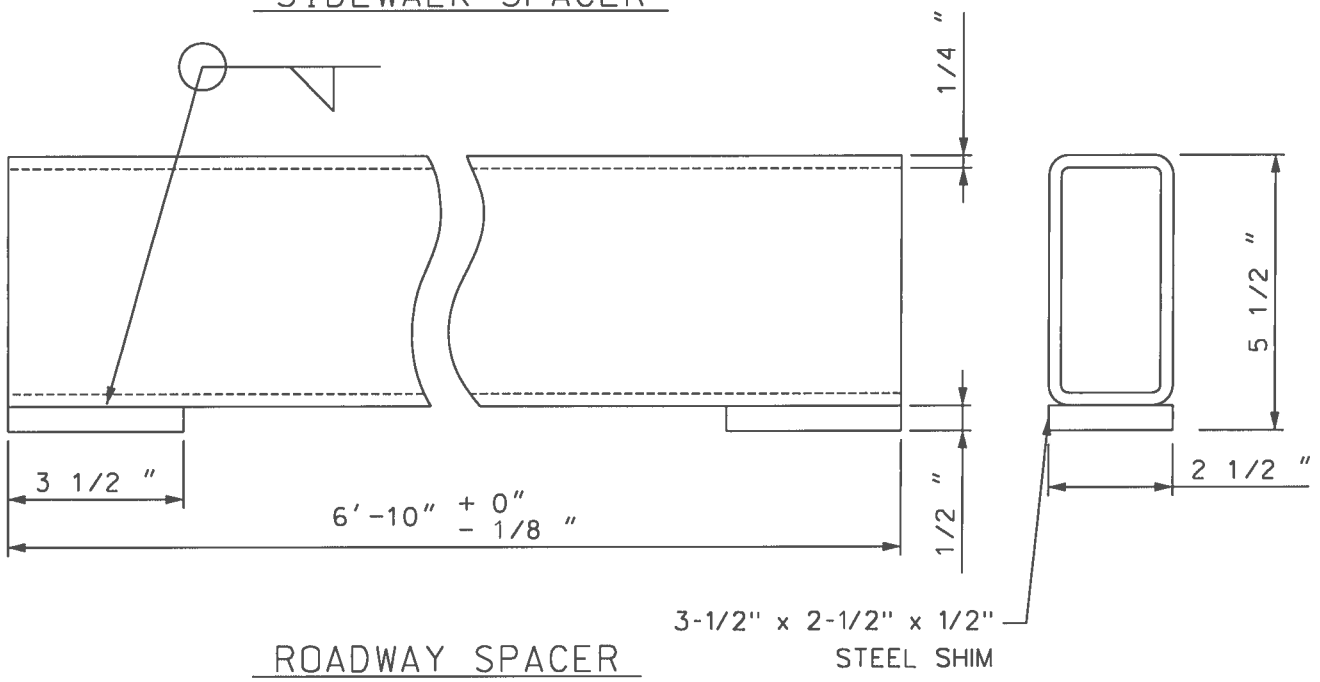

ROADWAY SPACER

SIDEWALK SPACER:

- SIDEWALK SPACER = 43LB
- COMPATIBLE UNIT: MHSPACERSMY
- STOCK NUMBER: 9721-0669

ROADWAY SPACER:

- ROADWAY SPACER = 80LB
- COMPATIBLE UNIT: MHSPACERRMY
- STOCK NUMBER: 9721-0668

NOTES:

1. ONCE THE STEEL TUBING IS CUT TO THE INDICATED LENGTH IT SHALL THEN BE GALVANIZED IN ACCORDANCE WITH ASTM A-123 WITH LATEST REVISIONS THEREOF.
2. REV A: CHANGE DWG FORMAT AND STOCK NO'S PER WMIS.
3. SEE PAGE 2 FOR WELDING SPECIFICATIONS.

DRAWN: LKD	DVLPED: WBS DATE: 07/88	REVIEWED: TDY DATE: 10/9/08	APPRVD: mdw DATE: 10/15/08	NEXT REVIEW: 11/11	REV: A

PHI PEPCO

POWER DISTRIBUTION STANDARDS

SPACERS FOR SDWK AND RDWY MH REMOVABLE ROOFS

WELDING SPECIFICATIONS

1: ALL STRUCTURAL STEEL SHALL CONFORM TO ASTM A36.

2: ALL STEEL IS TO BE WELDED IN ACCORDANCE WITH AWS D1.1 USING EITHER THE SMAW PROCESS (AWS SPEC. A5.1) OR THE FCAW PROCESS (AWS SPEC. A5.20 OR A5.29).

3: ALL WELDING IS TO BE PERFORMED ACCORDING TO WELDING PROCEDURE SPECIFICATIONS PFAB200601, PFAB200602 AND PFAB200603.

4: ALL WELDERS ARE TO BE QUALIFIED ACCORDING TO AWS D1.1.

5: ALL WELDER CERTIFICATION RECORDS ARE TO BE DOCUMENTED, MAINTAINED AND AVAILABLE FOR INSPECTION/VERIFICATION.

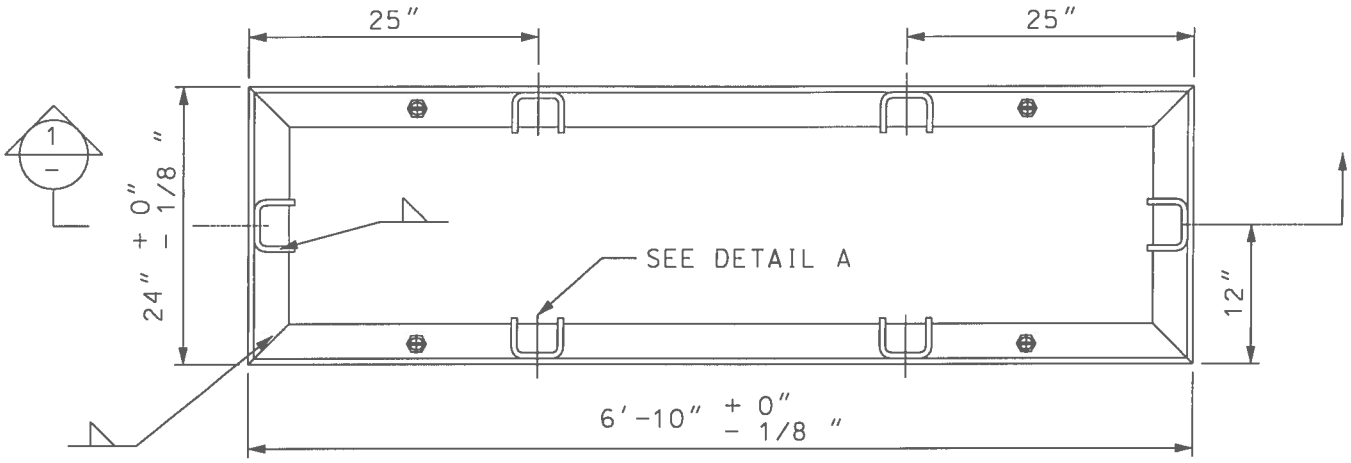

PLAN OF THE FRAME STOCK NO. 9721-0634

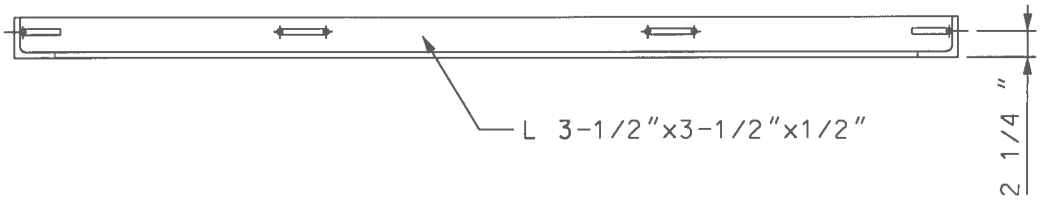

SECTION 1

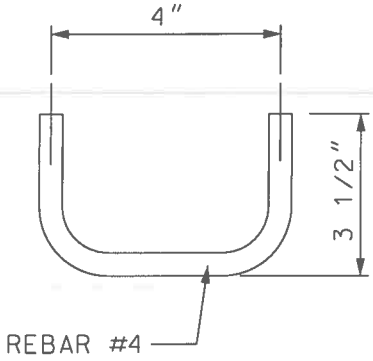

DETAIL A
1" = 5"

NOTE:

1. REV A: CHANGED DWG FORMAT.
2. FRAME NOTES: SEE PAGE 3
3. REV B:CHANGED DWG FORMAT,STOCK NUMBERS, DWG NUMBERS
4. WELDING SPECIFICATIONS -SEE PAGE 5

DRAWN: DPJ	DVLPED: CER DATE: 02-10-82	REVIEWED:IDY DATE:10/8/08	APPRVD: MDW DATE: 10/15/08	NEXT REVIEW:11/11	REV: B

PHI PEPCO

POWER DISTRIBUTION STANDARDS

2'-0" x 6'-10" FLUSH TYPE ROOF SLABS FOR SIDEWALK MANHOLES

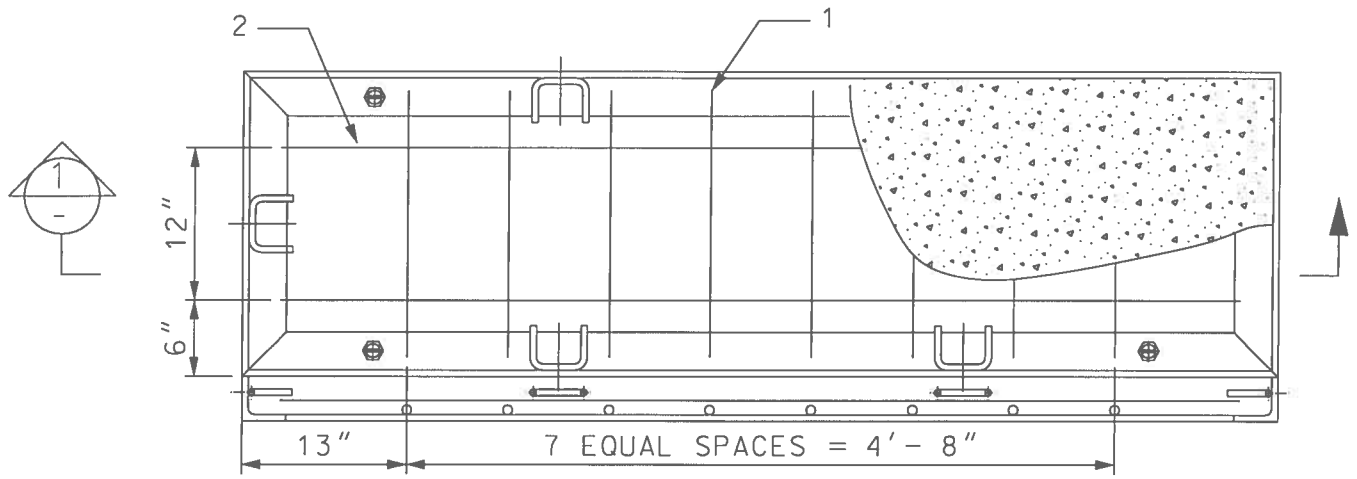

PLAN OF THE SLAB: MHRS72SMY STOCK NO. 9721-0648

SECTION 1

SIDEWALK SLAB NOTES:

1: THE REBAR SHALL BE EPOXY AND INSTALLED INTO THE FRAME AS SHOWN.

2: CONCRETE SHALL THEN BE TROWL FINISHED FLUSH WITH THE TOP EDGE FRAME.

3: SDWK SLAB WEIGHT = 850 LBS

4: 4 CU.F.T OF 4000PSI CONCRETE

5: REV A: CHANGED DWG FORMAT.

6: REV B: CHANGED DWG FORMAT, STOCK NUMBERS, DWG NUMBERS.

ROD NO	1	2
QUANTITY	8	2
SIZE	#3	#3
LENGTH	1'-9"	6'-4"

DRAWN: DPJ	DVLPED: CER DATE: 02-10-82	REVIEWED: TDY DATE: 10/8/08	APPRVD: MDW DATE: 10/15/08	NEXT REVIEW: 11/11	REV: B

PHI PEPCO

POWER DISTRIBUTION STANDARDS

2'-0' x 6'-10' FLUSH TYPE ROOF SLABS FOR SIDEWALK MANHOLES

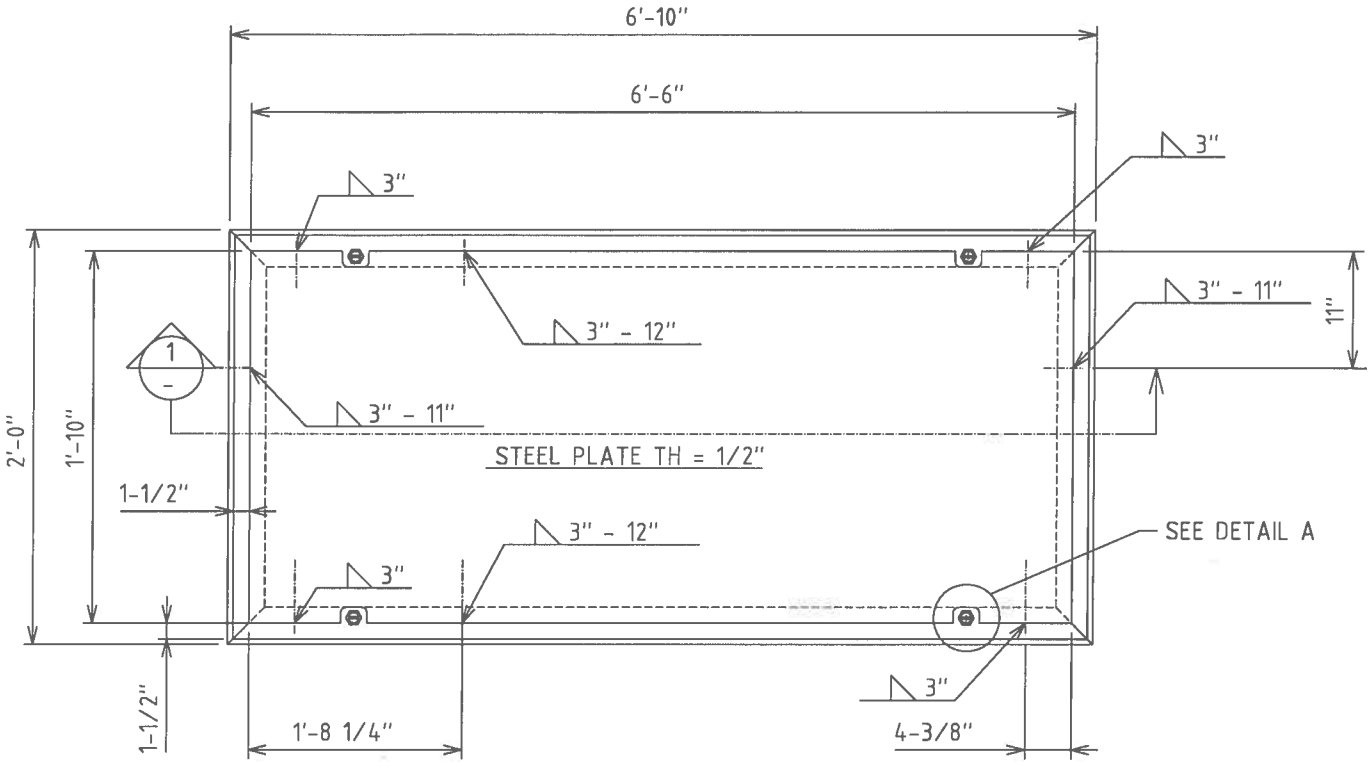

PLAN OF THE SLAB PAN: MHRP72SMY: STOCK NO. 9721-0214

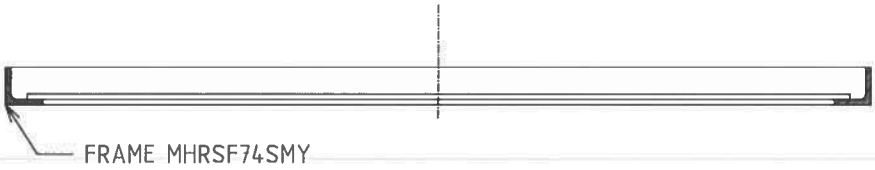

SECTION 1

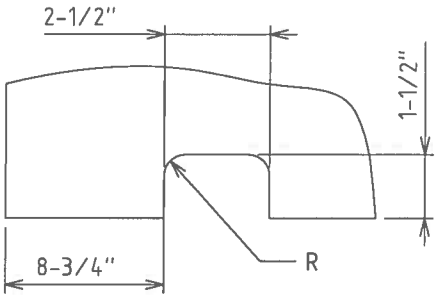

DETAIL A

SIDEWALK SLAB NOTES:

1. THE FRAME SHALL BE BUILT WITHOUT STIRRUPS (DETAIL A OF 2-2-1327 SH 1).
2. SDWK SLAB PAN WEIGHT = 727 LBS (FRAME 246 LBS + STEEL PLATE 481 LBS)
3. THE STEEL PLATE SHALL BE NOTCHED AND WELDED TO THE FRAMEBEFORE GALVANIZING.
4. WELDING SPECIFICATIONS - SEE PAGE 14

DRAWN: DPJ	DVLPED: CER DATE: 02-10-82	REVIEWED: TDY DATE: 10/8/08	APPRVD: MDW DATE: 10/15/08	NEXT REVIEW: 11/11	REV: B

PHI PEPCO

POWER DISTRIBUTION STANDARDS

2'-0" x 6'-10" FLUSH TYPE ROOF SLABS FOR SIDEWALK MANHOLES

FRAME NOTES:

1: MITER AND WELD ALL CORNERS 90 GRIND OFF ANY HIGH SPOTS ON THE FLANGE SURFACES TO ALLOW PROPER SEATING OF FRAME.

2: FINISHED FRAME IS TO HAVE ALL CORNERS ON THE SAME PLANE AND IS NOT TO BE TWISTED OR BENT

3: FRAME TO BE GALVANIZED AFTER SHOP WORK AND SHALL CONFORM TO A.S.T.M SPECIFICATION A-123 WITH LATEST REVISIONS THEREOF.

4: THIS FRAME SHALL BE LIMITED TO SIDEWALK USE WITH MAXIMUM CLEAR SPAN BETWEEN SUPPORTS OF 6'-4".

5: FRAME WEIGHT = 200 LBS

6: REV A: CHANGED DWG FORMAT. CHANGED STOCK NO'S PER WMIS.

7: REV B: CHANGED DWG FORMAT, STOCK NUMBERS, DWG NUMBERS.

COMPATIBLE UNIT
2'-0" x 6'-10" SLAB FOR SIDEWALK MANHOLES

QUANTITY	ITEM	STOCK #	DESCRIPTION	EA
17'-8"			CORNER L 3-1/2"x3-1/2"x1/2"H	
7'-9"		9700-0024	REBAR SIZE #4	
26'-8"		9700-0023	REBAR SIZE #3	

DESIGNATION	DESCRIPTION	STOCK NO.
MHRS72SMY	SLAB 7x2 SDWK ROOF	9721-0648

DRAWN: DPJ	DVLPED: CER DATE: 02-10-82	REVIEWED: TDY DATE: 10/8/08	APPRVD: MDW DATE: 10/15/08	NEXT REVIEW: 11/11	REV: B

PHI PEPCO

POWER DISTRIBUTION STANDARDS

2'-0" x 6'-10" FLUSH TYPE ROOF SLABS FOR SIDEWALK MANHOLES

WELDING SPECIFICATIONS

1: ALL STRUCTURAL STEEL SHALL CONFORM TO ASTM A36.

2: ALL STEEL IS TO BE WELDED IN ACCORDANCE WITH AWS D1.1 USING EITHER THE SMAW PROCESS (AWS SPEC. A5.1) OR THE FCAW PROCESS (AWS SPEC. A5.20 OR A5.29).

3: ALL WELDING IS TO BE PERFORMED ACCORDING TO WELDING PROCEDURE SPECIFICATIONS PFAB200601, PFAB200602 AND PFAB200603.

4: ALL WELDERS ARE TO BE QUALIFIED ACCORDING TO AWS D1.1.

5: ALL WELDER CERTIFICATION RECORDS ARE TO BE DOCUMENTED, MAINTAINED AND AVAILABLE FOR INSPECTION/VERIFICATION.

DRAWN: DPJ	DVLPED: CER DATE: 02-10-82	REVIEWED: TDY DATE: 10/8/08	APPRVD: MDW DATE: 10/15/08	NEXT REVIEW: 11/11	REV: A

PHI PEPCO

POWER DISTRIBUTION STANDARDS

2'-0" x 6'-10" FLUSH TYPE ROOF SLABS FOR SIDEWALK MANHOLES

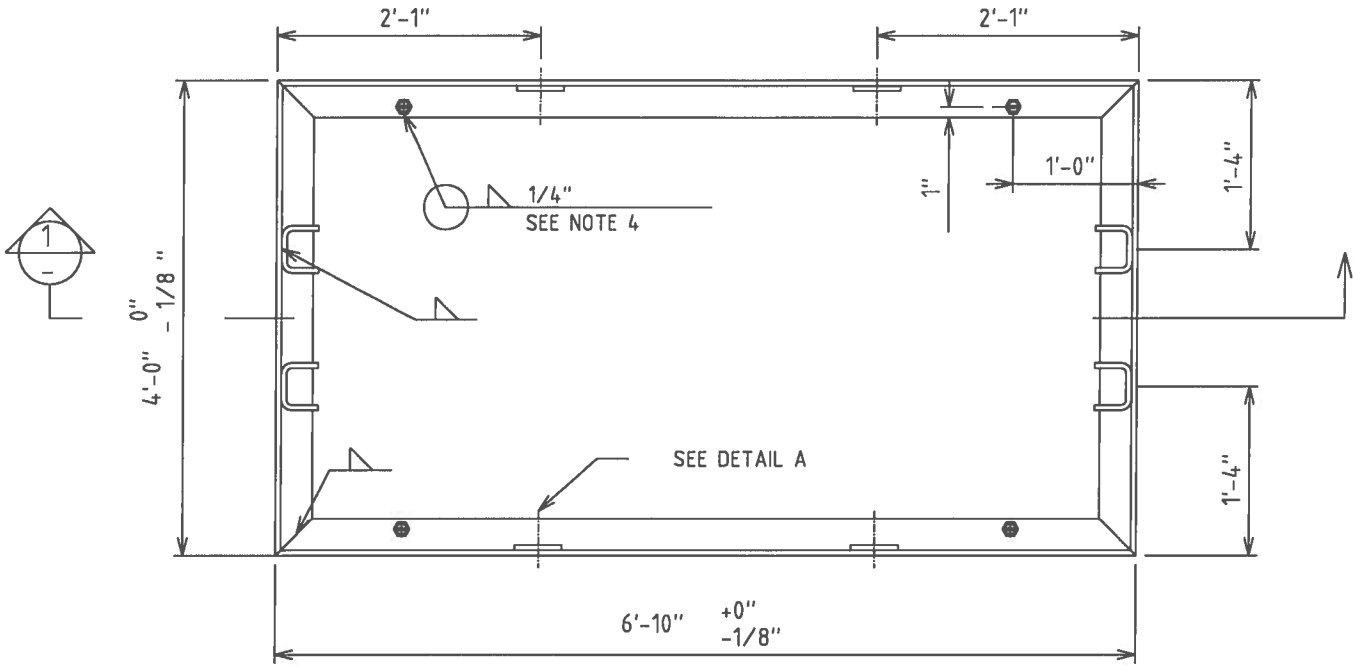

PLAN OF THE FRAME: STOCK NO. 9721-0660

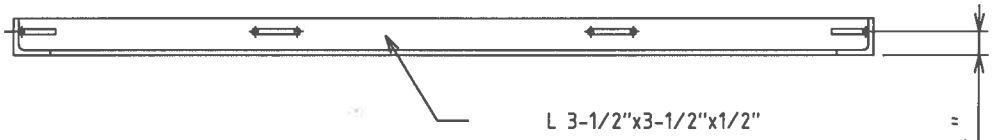

SECTION 1

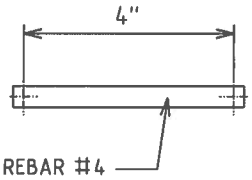

DETAIL A

FRAME NOTES: SEE PAGE 3

WELDING SPECIFICATIONS - SEE PAGE 14

DRAWN: LKD	DVLPED: JAD DATE: 10-15-03	REVIEWED: TDY DATE: 10/8/08	APPRVD: MDW DATE: 10/15/08	NEXT REVIEW: 11/11	REV: A

PHI PEPCO

POWER DISTRIBUTION STANDARDS

4'-0" x 6'-10" FLUSH TYPE ROOF SLABS FOR SIDEWALK MANHOLES

2-2-1327.2.14

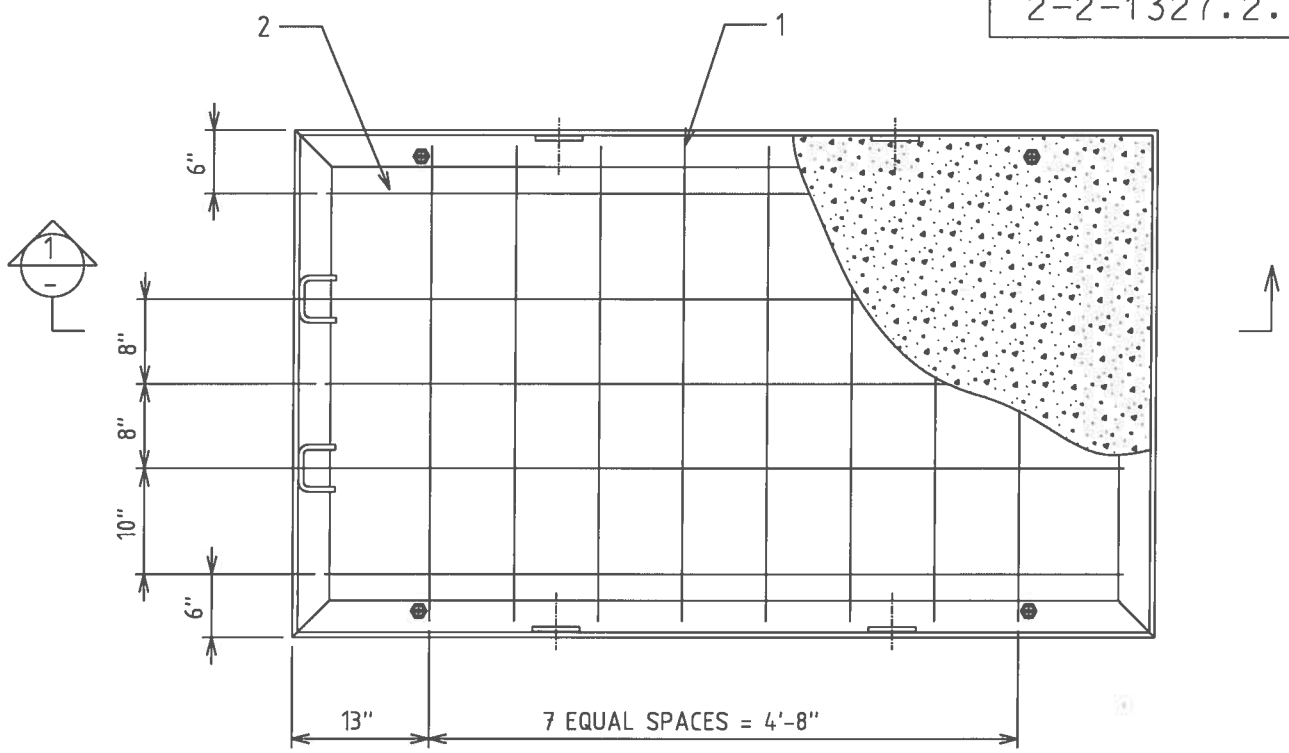

PLAN OF THE SLAB : MHRS74SMY: STOCK NO.9721-0661

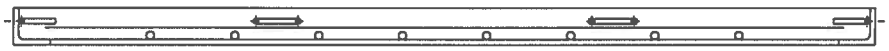

SECTION 1

SIDEWALK SLAB NOTES:

1. THE REBAR SHALL BE EPOXY AND INSTALLED INTO THE FRAME AS SHOWN.
2. CONCRETE SHALL THEN BE TROWL FINISHED FLUSH WITH THE TOP EDGE FRAME.
3. SDWK SLAB WEIGHT = 1396 LBS
4. 8.2 CU.F.T OF 4000PSI CONCRETE

ROD NO	1	2
QUANTITY	8	5
SIZE	#3	#3
LENGTH	3'-9"	6'-4"

DRAWN: LKD	DVLPED: JAD DATE: 10-15-03	REVIEWED: TDY DATE: 10/8/08	APPRVD: MDW DATE: 10/15/08	NEXT REVIEW: 11/11	REV: A

PHI PEPCO

POWER DISTRIBUTION STANDARDS

4'-0" x 6'-10" FLUSH TYPE ROOF SLABS FOR SIDEWALK MANHOLES

FRAME NOTES:

1. MITER AND WELD ALL CORNERS 90 GRIND OFF ANY HIGH SPOTS ON THE FLANGE SURFACES TO ALLOW PROPER SEATING OF FRAME.
2. FINISHED FRAME IS TO HAVE ALL CORNERS ON THE SAME PLANE AND IS NOT TO BE TWISTED OR BENT
3. FRAME TO BE GALVANIZED AFTER SHOP WORK AND SHALL CONFORM TO A.S.T.M SPECIFICATION A-123 WITH LATEST REVISIONS THEREOF.
4. AFTER FRAME HAS BEEN GALVANIZED WELD FOUR 1" LIFTING INSERTS (STOCK NO. 9721-0777) TO FRAME AS SHOWN. THE INSERTS SHALL BE PLUGGED WITH 1" BRASS PLUG (STOCK NP. 9721-0156). THE PLUGS SHALL BE FLUSH WITH THE TOP OF THE INSERTS.
5. THIS FRAME SHALL BE LIMITED TO SIDEWALK USE WITH MAXIMUM CLEAR SPAN BETWEEN SUPPORTS OF 6'-4".
6. FRAME WEIGHT = 246 LBS

COMPATIBLE UNIT 4'-0" x 6'-10" FRAME FOR SIDEWALK MANHOLES			
QTY	STOCK #	DESCRIPTION	ITEM
4	9721-0777	COUPLING HEXAGONAL SST 8THD 1"x3"LONG	EA
21'-8"		CORNER L 3-1/2"x3-1/2"x1/2"H	
7'-9"	9700-0024	REBAR SIZE #4	
61'-8"	9700-0023	REBAR SIZE #3	
	DESIGNATION	DESCRIPTION	STOCK #
MHRS74SMY		SLAB 7x4 SDWK ROOF	9721-0661

DRAWN: LKD	DVLPED: JAD DATE: 10-15-03	REVIEWED: TDY DATE: 10/8/08	APPRVD: MDW DATE: 10/15/08	NEXT REVIEW: 11/11	REV: A

PHI PEPCO

POWER DISTRIBUTION STANDARDS

4'-0" x 6'-10" FLUSH TYPE ROOF SLABS FOR SIDEWALK MANHOLES

2-2-1327.4.14

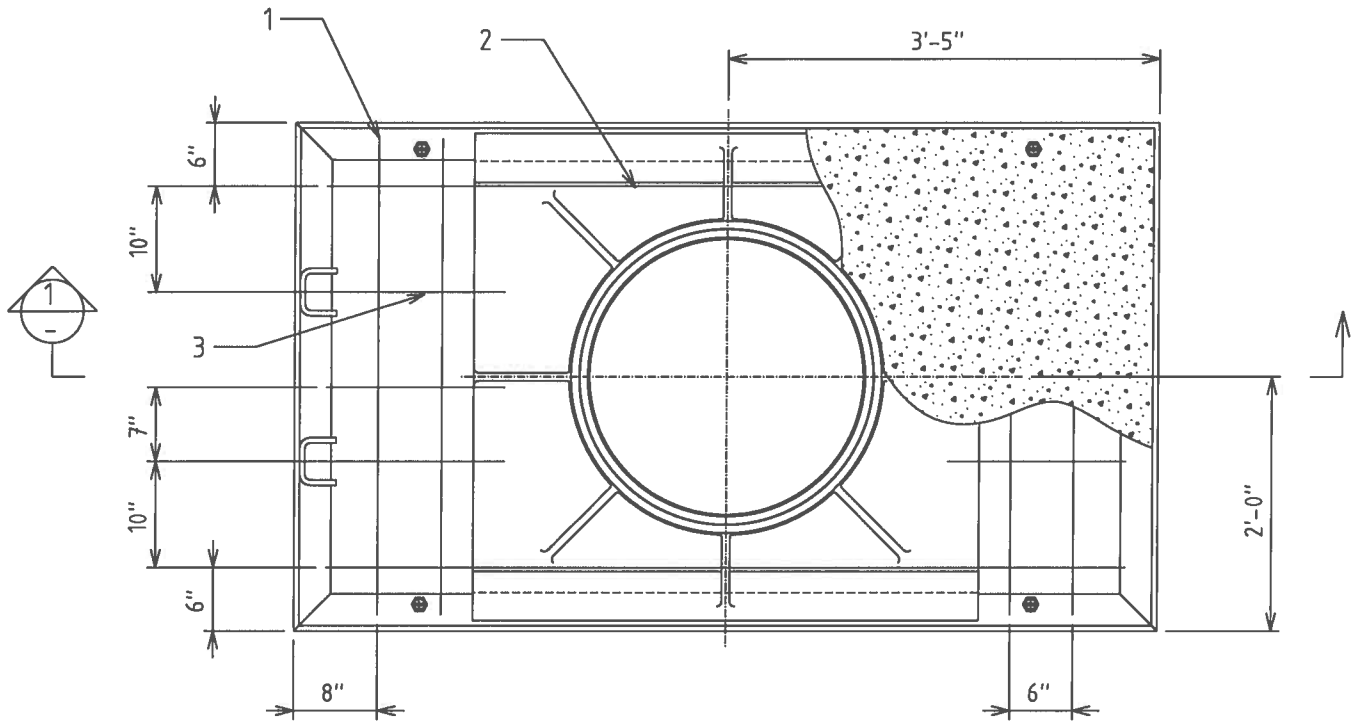

PLAN OF THE SLAB : MHRS74CSMY:STOCK NO.9721-0662

SECTION 1

SIDEWALK SLAB NOTES:

1. THE REBAR SHALL BE EPOXY AND INSTALLED INTO THE FRAME AS SHOWN.
2. CONCRETE SHALL THEN BE TROWL FINISHED FLUSH WITH THE TOP EDGE FRAME.
3. SDWK SLAB WEIGHT = 1625 LBS
4. 5.5 CU.F.T OF 4000PSI CONCRETE

ROD NO	1	2	3
QUANTITY	4	2	6
SIZE	#3	#3	#3
LENGTH	3'-9"	6'-4"	1'-5"

DRAWN: LKD	DVLPED: JAD DATE: 10-15-03	REVIEWED: TDY DATE: 10/08/08	APPRVD: MDW DATE: 10/15/08	NEXT REVIEW: 11/11	REV: A

PHI PEPCO

POWER DISTRIBUTION STANDARDS

4'-0" x 6'-10" FLUSH TYPE ROOF SLABS FOR SIDEWALK MANHOLES

ENGINEERING ASSEMBLY SDWK SLAB PAN WITH 28" OPENING			
QTY	DESIGNATION	DESCRIPTION	REF. DWG
1	MHRSF74SMY	FRAME ROOF SLAB GALV SDWK	2-2-1327 Sht 1
1	MHCF28SMY	FRAME 28" MH COVER DOUBLE ACTING SDWK	6-2-0433
	DESIGNATION	DESCRIPTION	STOCK
MHRS74CSMY		MH RF SLAB 7x4 SAC SDWK ML CO	9721-0662

COMPATIBLE UNIT SLAB PAN WITH 28" OPENING			
QTY	STOCK #	DESCRIPTION	ITEM
1	9721-0660	FRAME ROOF SLAB GALV SDWK	EA
1	9721-0610	FRAME 28" MH COVER DOUBLE ACTING SIDEWALK	EA
25'-10"	9700-0023	REBAR #3	
	DESIGNATION	DESCRIPTION	STOCK #
MHRS74CSMY		MH RF SLAB 7x4 SAC SDWK ML CO	9721-0662

DRAWN: LKD	DVLPED: JAD DATE: 10-15-03	REVIEWED: TDY DATE: 10/8/08	APPRVD: MDW DATE: 10/15/08	NEXT REVIEW: 11/11	REV: A

PHI PEPCO

POWER DISTRIBUTION STANDARDS

4'-0" x 6'-10" FLUSH TYPE ROOF SLABS FOR SIDEWALK MANHOLES

2-2-1327.6.14

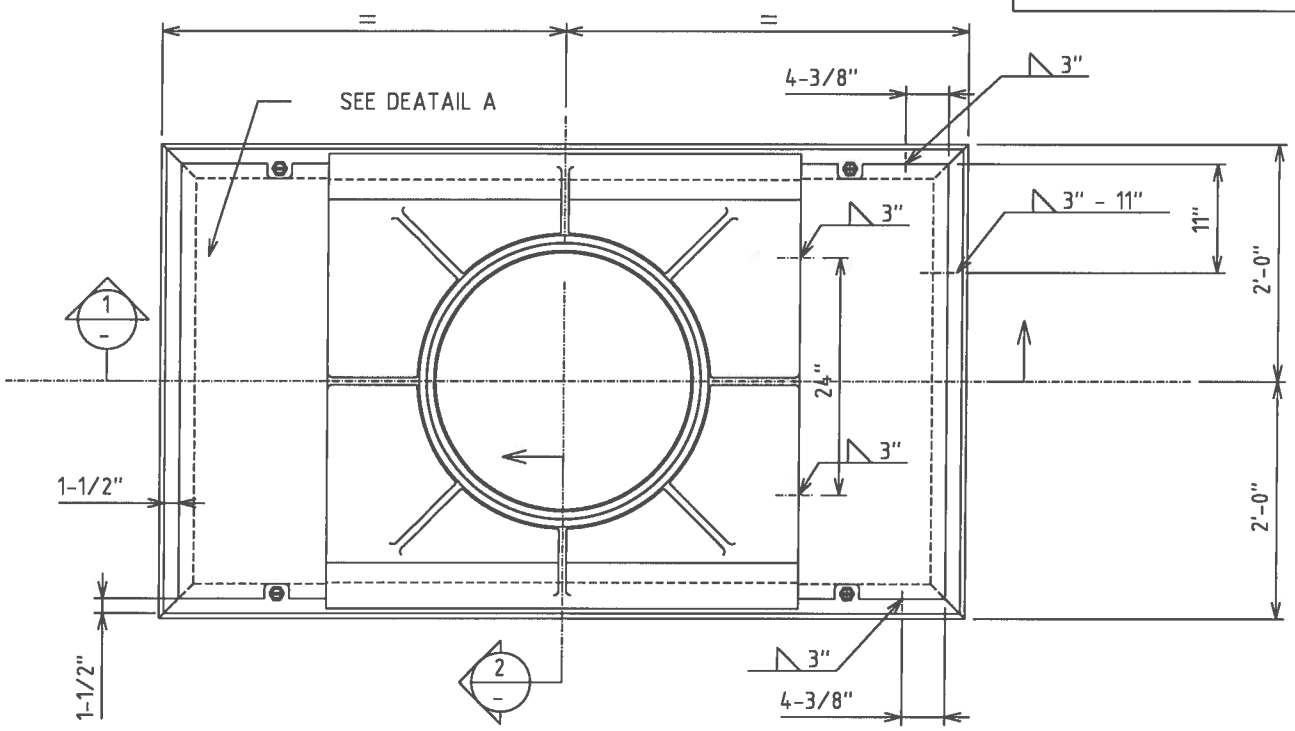

PLAN OF THE SLAB PAN: MHRP74CSMY: STOCK NO. 9721-0223

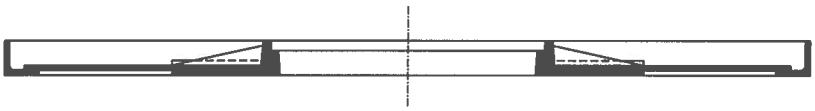

SECTION 1

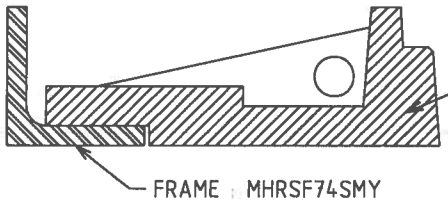

SECTION 2
1" = 5"

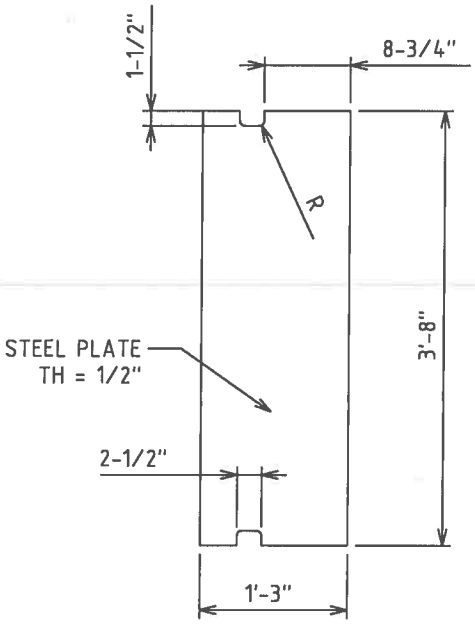

DETAIL A

SIDEWALK SLAB NOTES

1. THE FRAME SHALL BE BUILT WITHOUT STIRRUPS (DETAIL A OF 5-2-1327 SHT 1)
2. SDWK SLAB PAN WITH 28" OPENING WEIGHT = 940 LBS (COVER FRAME 512LBS + FRAME 246LBS + STEEL PLATES 182LBS)
3. ALL SHOP WORK SHALL BE MADE BEFORE GALVANIZED
4. THE DOUBLE ACTING COVER SHALL BE SET CENTER OF THE FRAME AS SHOWN
5. WELDING SPECIFICATIONS - SEE PAGE 14

DRAWN: LKD	DVLPED: JAD DATE: 10-15-03	REVIEWED: IDY DATE: 10/8/08	APPRVD: MDW DATE: 10/15/08	NEXT REVIEW: 11/11	REV: A

PHI PEPCO

POWER DISTRIBUTION STANDARDS

4'-0" x 6'-10" FLUSH TYPE ROOF SLABS FOR SIDEWALK MANHOLES

ENGINEERING ASSEMBLY SDWK SLAB PAN WITH 28" OPENING			
QTY	DESIGNATION	DESCRIPTION	REF. DWG
1	MHRSF74SMY	FRAME ROOF SLAB GALV SDWK	2-2-1327sh1
1	MHCF28SMY	FRAME 28" MH COVER DOUBLE ACTING SDWK	6-2-0433
	DESIGNATION	DESCRIPTION	STOCK #
MHRP74CSMY		MH RF SLB PAN 7x4 SAC SDWK ML CO	9721-0223

COMPATIBLE UNIT SLAB PAN WITH 28" OPENING			
QTY	STOCK #	DESCRIPTION	ITEM
1	9721-0660	FRAME ROOF SLAB GALV SDWK	EA
1	9721-0610	FRAME 28" MH COVER DOUBLE ACTING SIDEWALK	EA
2		STEEL PLATE 1'-3" x 3'-8" x 1/2" (DWG 2-2-1327 SHT 6)	
	DESIGNATION	DESCRIPTION	STOCK #
MHRP74CSMY		MH RF SLB PAN 7x4 SAC SDWK ML CO	9721-0223

DRAWN: LKD	DVLPED: JAD DATE: 10-15-03	REVIEWED: TDY DATE: 10/8/08	APPRVD: MDW DATE: 10/15/08	NEXT REVIEW: 11/11	REV: A

PHI PEPCO

POWER DISTRIBUTION STANDARDS

4'-0" x 6'-10" FLUSH TYPE ROOF SLABS FOR SIDEWALK MANHOLES

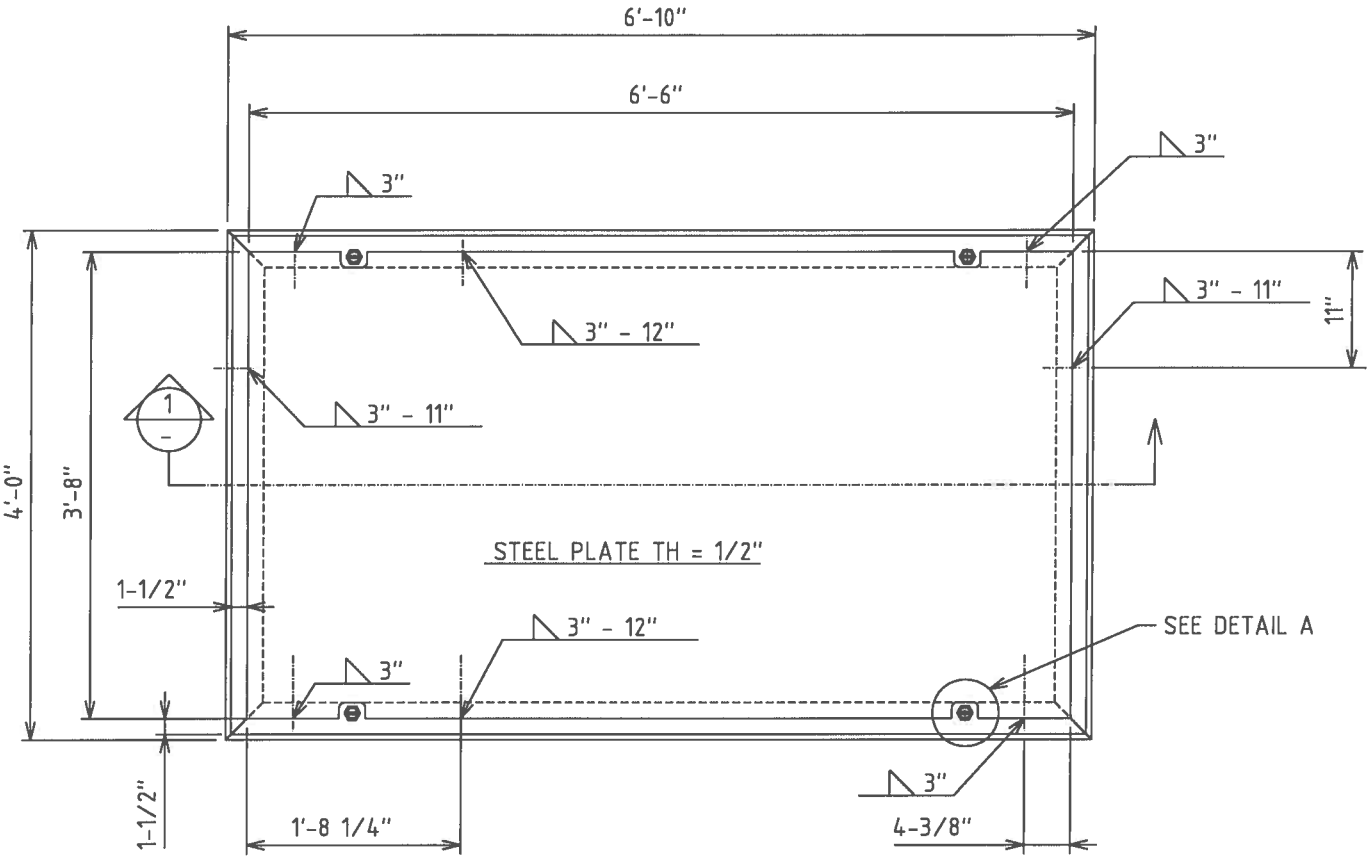

PLAN OF THE SLAB PAN: MHRP74SMY: STOCK NO. 9721-0222

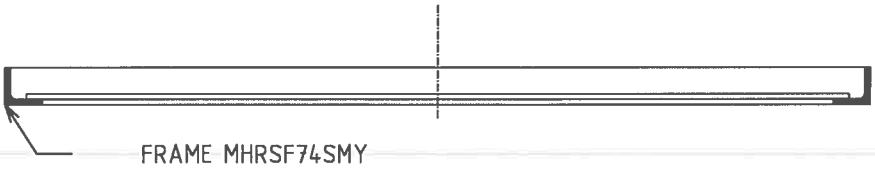

SECTION 1

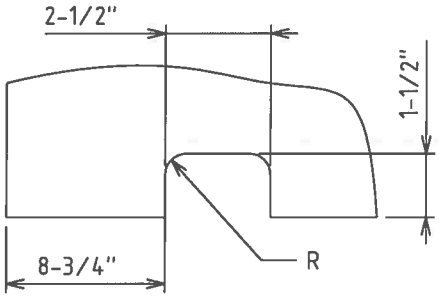

DETAIL A

SIDEWALK SLAB NOTES

1. THE FRAME SHALL BE BUILT WITHOUT STIRRUPS (DETAIL A OF 5-2-1327 SH 1).
2. SDWK SLAB PAN WEIGHT = 727 LBS (FRAME 246 LBS + STEEL PLATE 481 LBS)
3. THE STEEL PLATE SHALL BE NOTCHED AND WELDED TO THE FRAMEBEFORE GALVANIZING.
4. WELDING SPECIFICATIONS - SEE PAGE 14

DRAWN: LKD	DVLPED: JAD DATE: 10-15-03	REVIEWED: TDY DATE: 10/8/08	APPRVD: MDW DATE: 10/15/08	NEXT REVIEW: 11/11	REV: A

PHI PEPCO

POWER DISTRIBUTION STANDARDS

4'-0" x 6'-10" FLUSH TYPE ROOF SLABS FOR SIDEWALK MANHOLES

ENGINEERING ASSEMBLY SDWK SLAB PAN			
QTY	DESIGNATION	DESCRIPTION	REF. DWG
1	MHRSF74SMY	FRAME ROOF SLAB GALV SDWK	2-2-1327 sht 1
	DESIGNATION	DESCRIPTION	STOCK
MHRP74SMY		MH RF SLB PAN 7x4 SDWK ML CO	9721-0222

COMPATIBLE UNIT SLAB PAN			
QTY	STOCK#	DESCRIPTION	ITEM
1	9721-0660	FRAME ROOF SLAB GALV SDWK	EA
1		STEEL PLATE 3'-8" x 6'-6" x 1/2" (DWG 2-2-1327 SHT 8)	
	DESIGNATION	DESCRIPTION	STOCK
MHRP74SMY		MH RF SLB PAN 7x4 SDWK ML CO	9721-0222

DRAWN: LKD	DVLPED: JAD DATE: 10-15-03	REVIEWED: TDY DATE: 10/8/08	APPRVD: MDW DATE: 10/15/08	NEXT REVIEW: 11/11	REV: A

PHI PEPCO

POWER DISTRIBUTION STANDARDS

4'-0" x 6'-10" FLUSH TYPE ROOF SLABS FOR SIDEWALK MANHOLES

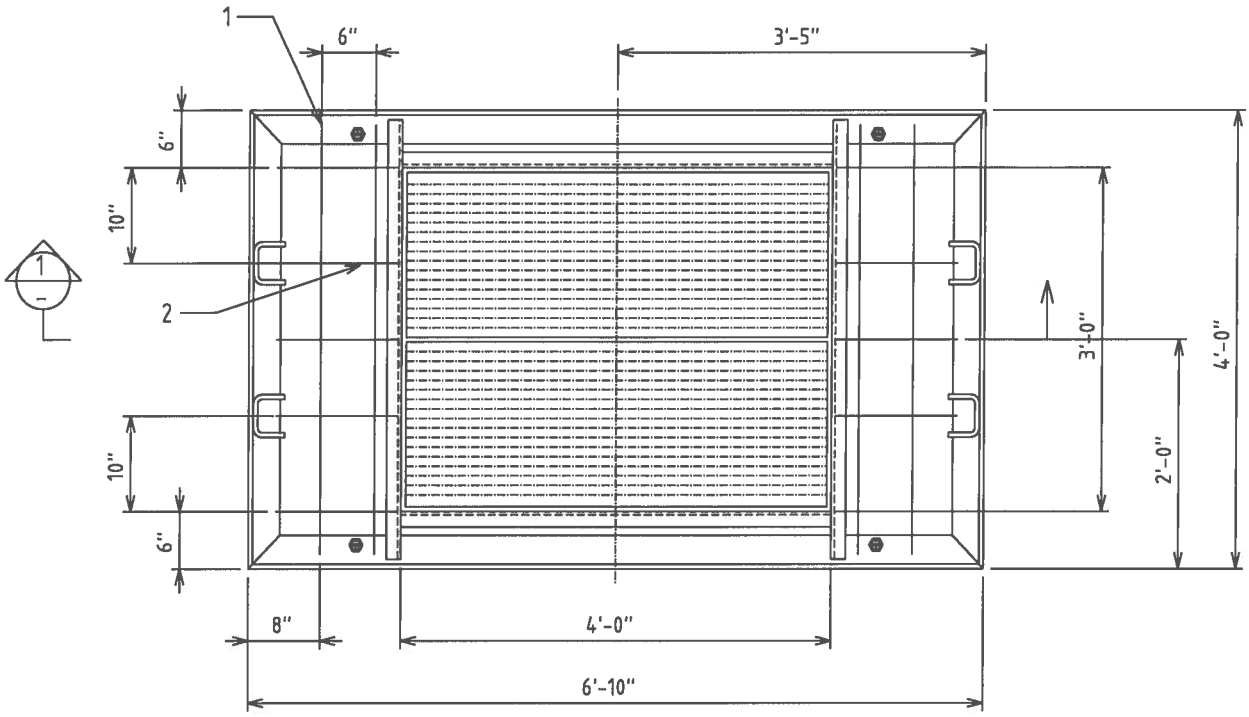

PLAN OF THE SLAB : MHRS74GSMY: STOCK NO. 9721-0663

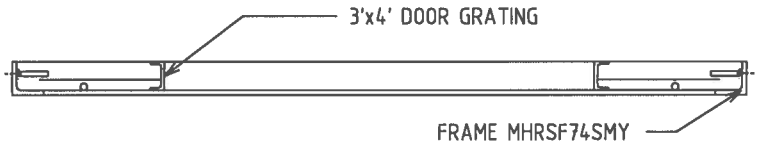

SECTION 1

ROD NO	1	2
QUANTITY	4	10
SIZE	#4	#4
LENGTH	3'-9"	1'-1"

SIDEWALK SLAB NOTES:

1. THE REBAR SHALL BE EPOXY AND INSTALLED INTO THE FRAME AS SHOWN.
2. CONCRETE SHALL THEN BE TROWL FINISHED FLUSH WITH THE TOP EDGE FRAME.
3. SDWK SLAB WEIGHT = 850 LBS
4. 3.7 CU.F.T OF 4000PSI CONCRETE
5. WELDING SPECIFICATIONS - SEE PAGE 14

DRAWN: LKD	DVLPED: JAD DATE: 10-15-03	REVIEWED: TDY DATE: 10/8/08	APPRVD: MDW DATE: 10/15/08	NEXT REVIEW: 11/11	REV: A

PHI PEPCO

POWER DISTRIBUTION STANDARDS

4'-0" x 6'-10" FLUSH TYPE ROOF SLABS FOR SIDEWALK MANHOLES

ENGINEERING ASSEMBLY SDWK SLAB WITH 3'x4' DOOR GRATING			
QTY	DESIGNATION	DESCRIPTION	REF. DWG
1	MHRSF74SMY	FRAME ROOF SLAB GALV SDWK	2-2-1327 sht 1
1	MHDG3X4SMY	DOOR GRATING STL 3x4 SDWK	
	DESIGNATION	DESCRIPTION	STOCK
MHRS74GSMY		MH RF SLAB 7x4 DRGRT SDWK ML CO	9721-0663

COMPATIBLE UNIT SDWK SLAB WITH 3'x4' DOOR GRATING			
QTY	STOCK#	DESCRIPTION	ITEM
25'-10"	9700-0024	REBAR #4	FT
1	9721-0674	FRAME W/DOOR SDWK TYPE 4'x6'10"	EA
	DESIGNATION	DESCRIPTION	STOCK
MHRS74GSMY		MH RF SLAB 7x4 DRGRT SDWK ML CO	9721-0663

DRAWN: LKD	DVLPED: JAD DATE: 10-15-03	REVIEWED: TDY DATE: 10/8/08	APPRVD: MDW DATE: 10/15/08	NEXT REVIEW: 11/11	REV: A

PHI PEPCO

POWER DISTRIBUTION STANDARDS

4'-0" x 6'-10" FLUSH TYPE ROOF SLABS FOR SIDEWALK MANHOLES

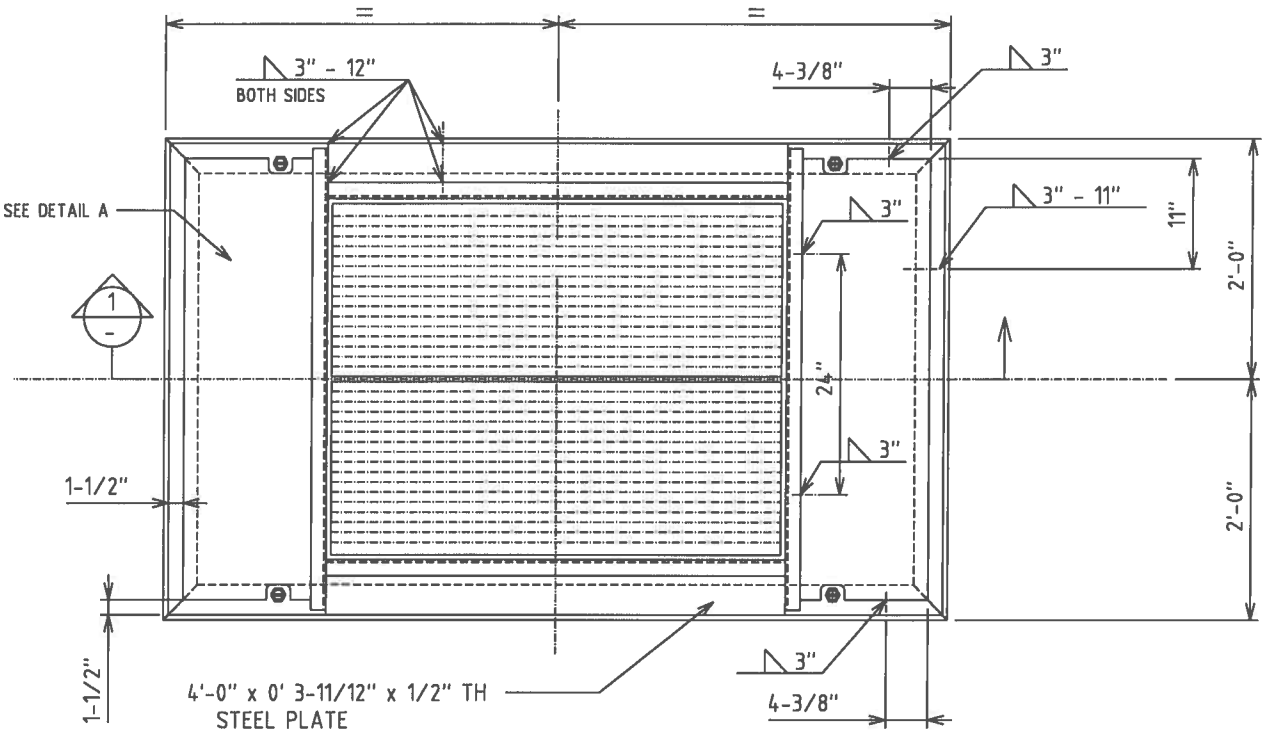

PLAN OF THE SLAB PAN: MHRP74GSMY: STOCK NO. 9721-0221

SECTION 1

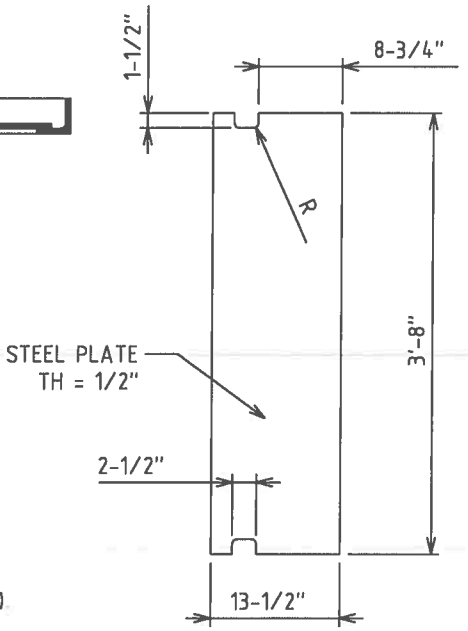

DETAIL A

SIDEWALK SLAB NOTES

1. THE FRAME SHALL BE BUILT WITHOUT STIRRUPS (DETAIL A OF 5-2-1327 SH 1)
2. SDWK SLAB WITH 4'x3' DOOR GRATING 28" = 646 LBS
   (DOOR GRATING 220 LBS + FRAME 246 LBS + STEEL PLATES 180 LBS)
3. ALL SHOP WORK SHALL BE MADE BEFORE GALVANIZED
4. THE DOOR GRATING SHALL BE SET CENTER OF THE FRAME AS SHOWN
5. WELDING SPECIFICATIONS - SEE PAGE 14

DRAWN: LKD	DVLPED: JAD DATE: 10-15-03	REVIEWED: TDY DATE: 10/8/08	APPRVD: MDW DATE: 10/15/08	NEXT REVIEW: 11/11	REV: A

PHI PEPCO

POWER DISTRIBUTION STANDARDS

4'-0" x 6'-10" FLUSH TYPE ROOF SLABS FOR SIDEWALK MANHOLES

ENGINEERING ASSEMBLY SDWK SLAB WITH 3'x4' DOOR GRATING			
QTY	DESIGNATION	DESCRIPTION	REF. DWG
1	MHRSF74SMY	FRAME ROOF SLAB GALV SDWK	2-2-1327 sht 1
1	MHDG3X4SMY	DOOR GRATING STL 3x4 SDWK	
	DESIGNATION	DESCRIPTION	STOCK #
MHRP74GSMY		MH RF SLAB PAN 7x4 DRGRT SDWK ML CO	9721-0221

COMPATIBLE UNIT SDWK SLAB WITH 3'x4' DOOR GRATING			
QTY	STOCK #	DESCRIPTION	ITEM
1	9721-0660	FRAME ROOF SLAB GALV SDWK	EA
1	9721-0622	DOOR GRATING STL 3x4 SDWK	EA
2		STEEL PLATE 3'-8" x 1' 1-1/2"x 1/2"TH	
2		STEEL PLATE 4'-0" x 0' 3-11/12" x 1/2"TH	
	DESIGNATION	DESCRIPTION	STOCK #
MHRP74GSMY		MH RF SLAB PAN 7x4 DRGRT SDWK ML CO	9721-0221

DRAWN: LKD	DVLPED: JAD DATE: 10-15-03	REVIEWED: TDY DATE: 10/8/08	APPRVD: MDW DATE: 10/15/08	NEXT REVIEW: 11/11	REV: A

PHI PEPCO

POWER DISTRIBUTION STANDARDS

4'-0" x 6'-10" FLUSH TYPE ROOF SLABS FOR SIDEWALK MANHOLES

WELDING SPECIFICATIONS

1: ALL STRUCTURAL STEEL SHALL CONFORM TO ASTM A36.

2: ALL STEEL IS TO BE WELDED IN ACCORDANCE WITH AWS D1.1 USING EITHER THE SMAW PROCESS (AWS SPEC. A5.1) OR THE FCAW PROCESS (AWS SPEC. A5.20 OR A5.29).

3: ALL WELDING IS TO BE PERFORMED ACCORDING TO WELDING PROCEDURE SPECIFICATIONS PFAB200601, PFAB200602 AND PFAB200603.

4: ALL WELDERS ARE TO BE QUALIFIED ACCORDING TO AWS D1.1.

5: ALL WELDER CERTIFICATION RECORDS ARE TO BE DOCUMENTED, MAINTAINED AND AVAILABLE FOR INSPECTION/VERIFICATION.

COMPATIBLE UNIT DESIGNATION

MHRR0606RMY

2-2-1141.1.1

REINFORCING SCHEDULE								
LOCATION	6' X 6' PRECAST ROOF							
DEPTH	9"							
ROD NO.	1	2	3	4	5	6	7	8
QUANTITY	10	10	10	16	8	4	8	10
SIZE	#6	#6	#6	#3	#3	#3	#3	#6
LENGTH	1'-4"	6'-3"	6'-9"	2'-0"	6'-9"	1'-4"	6' 3"	1'-7"

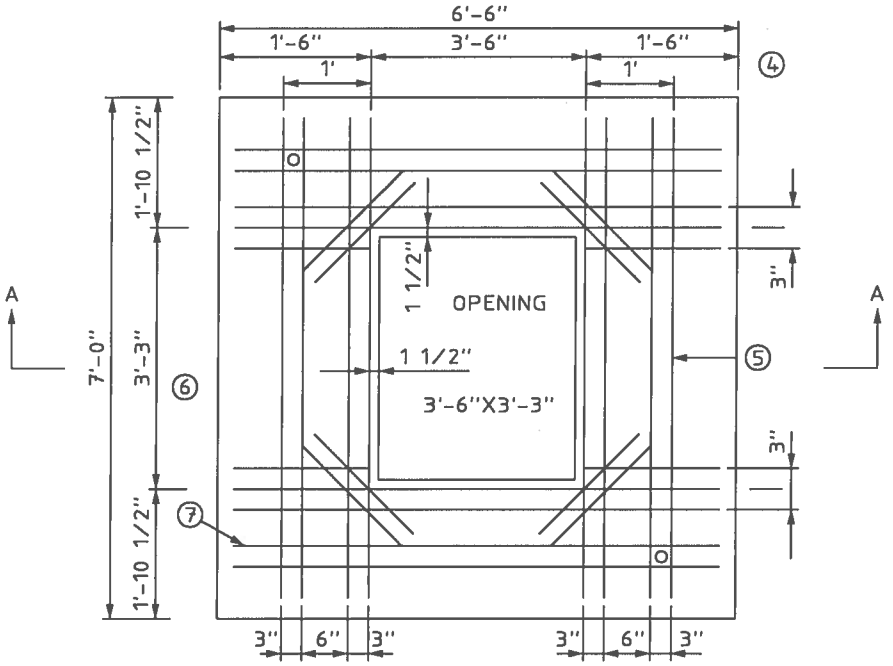

PLAN OF TOP REINFORCING

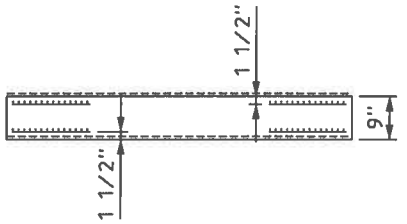

SECTION A-A

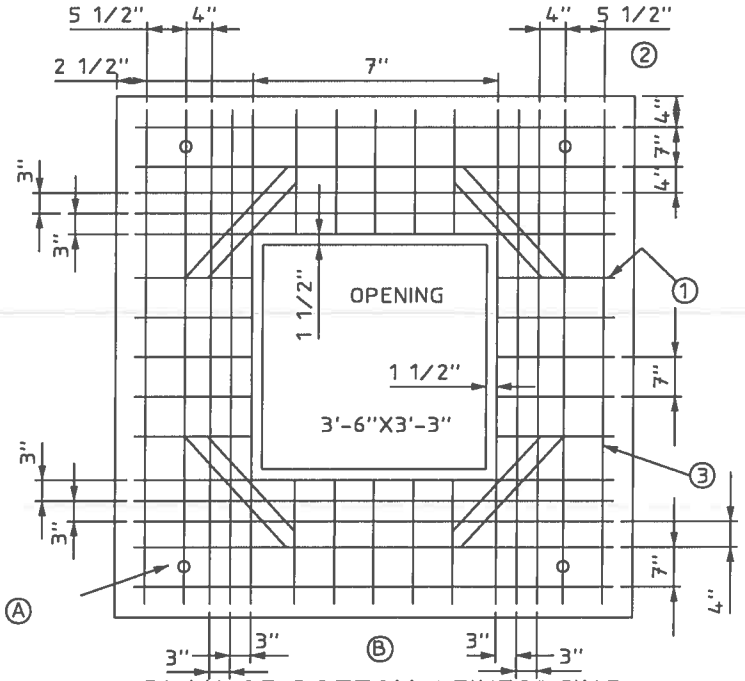

PLAN OF BOTTOM REINFORCING

Ⓐ INSTALL SUPERIOR SINGLE PICK-UP INSERTS-TYPE 1,4 REQUIRED

NOTES:

1. TOTAL WEIGHT - 4200 LBS
   TOTAL CONCRETE - 1.1 CUBIC YD.
   6 BAG MIX, 3500 PSI AT 28 DAYS.
2. STOCK # 9721-0564
3. ROOF TO BE INSTALL WITH 12" MINIMUM COVER.
4. POSITION ROOF WITH 3'-6" OPENING DIMENSION IN DIRECTION OF TRAFFIC
5. REV A: CHANGED DWG FORMAT, CHANGED STOCK NO'S PER WMIS.

DRAWN: AIPL	DVLPED: CEG DATE: 4/23/79	REVIEWED: TQY DATE: 10/2/08	APPRVD: MDW DATE: 10/9/08	NEXT REVIEW: 11/11	REV: A

PHI PEPCO

POWER DISTRIBUTION STANDARDS

PRECAST ROADWAY ROOF FOR 6' X 6' MANHOLE

2-2-1184.1.2

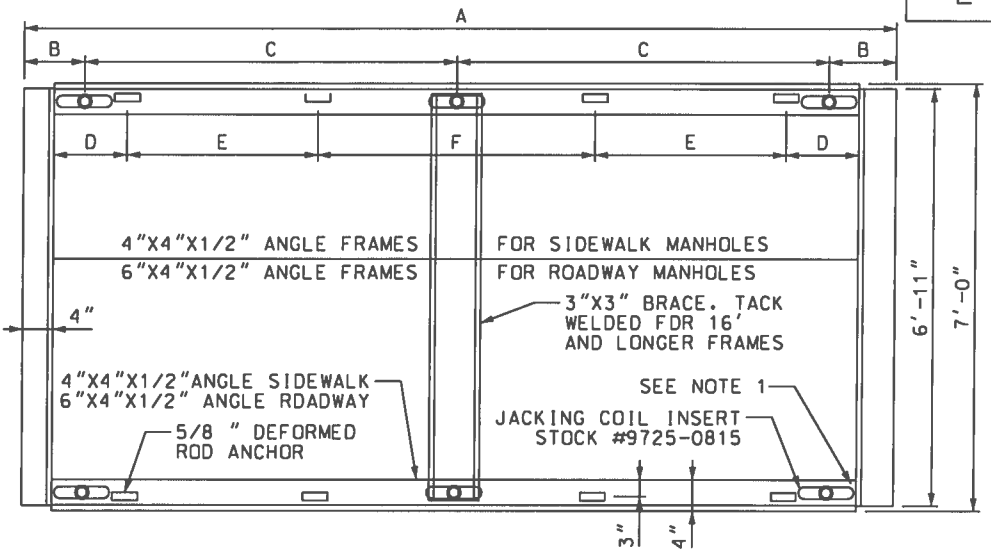

SCHEDULE OF DIMENSIONS										
COMPATIBLE UNIT DESIGNATION	MANHOLE SIZE	STOCK NUMBER	FRAME LENGTH	JACKING COIL INSERTS			5/8" * DEFORMED ROD ANCHOR			
			A	NO. REQ'D	B	C	NO. REQ'D	D	E	F
MHRF0606SMY	6' X 6'	9721-0201	7'-0"	4	1'-6"	-		2'-0"	-	-
MHRF0608SMY	6' X 8'	9721-0205	9'-0"	4	2'-0"	-	4	2'-6"	-	-
MHRF0608RMY	6' X 8'		9'-0"	4	2'-0"	-	4	2'-6"	-	-
MHRF0610SMY	6' X 10'	9721-0206	11'-0"	4	2'-6"	-	6	3'-6"	3'-2"	-
MHRF0610RMY	6' X 10'		11'-0"	4	2'-6"	-	6	3'-6"	3'-2"	-
MHRF0612SMY	6' X 12'	9721-0207	13'-0"	4	3'-0"	-	6	2'-6"	3'-8"	-
MHRF0612RMY	6' X 12'		13'-0"	4	3'-0"	-	6	2'-6"	3'-8"	-
MHRF0614SMY	6' X 14'	9721-0208	15'-0"	4	4'-0"	-	8	2'-0"	3'-6"	3'-6"
MHRF0614RMY	6' X 14'	9721-0220	15'-0"	4	4'-0"	-	8	2'-0"	3'-6"	3'-6"
MHRF0616SMY	6' X 16'	9721-0209	17'-0"	6	2'-0"	6'-6"	8	2'-6"	3'-8"	4'-0"
MHRF0616RMY	6' X 16'		17'-0"	6	2'-0"	6'-6"	8	2'-6"	3'-8"	4'-0"
MHRF0618SMY	6' X 18'	9721-0210	19'-0"	6	2'-0"	7'-6"	8	2'-6"	4'-6"	4'-4"
MHRF0618RMY	6' X 18'	9721-0202	19'-0"	6	2'-0"	7'-6"	8	2'-6"	4'-6"	4'-4"
MHRF0620SMY	6' X 20'	9721-0211	21'-0"	6	2'-0"	8'-6"	8	3'-6"	4'-6"	4'-4"
MHRF0620RMY	6' X 20'	9721-0203	21'-0"	6	2'-0"	8'-6"	8	3'-6"	4'-6"	4'-4"
MHRF0622SMY	6' X 22'	9721-0212	23'-0"	6	2'-0"	9'-6"	8	3'-6"	5'-6"	4'-4"
MHRF0622RMY	6' X 22'	9721-0204	23'-0"	6	2'-0"	9'-6"	8	3'-6"	5'-6"	4'-4"

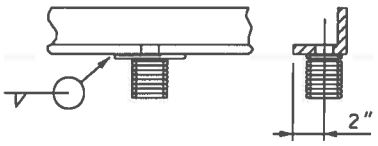

JACKING COIL DETAIL

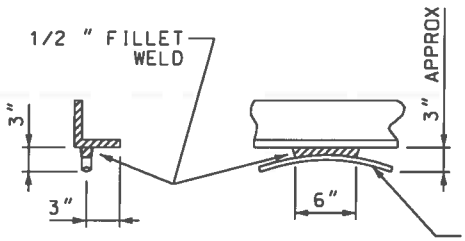

ROD ANCHOR DETAIL

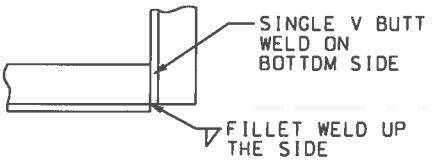

CORNER DETAIL PLAN VIEW

NOTES:

1. FOR NOTES SEE SHEET 2
2. WELDING SPECIFICATION SEE SHEET(2)
3. REV A: CHANGED DWG FORMAT AND CHANGED STOCK NO'S PER WMIS.

DRAWN: LKD	DVLPED: PWL DATE: 11-03-80	REVIEWED: IWM DATE: 8/8/08	APPRVD: MDW DATE: 8/11	NEXT REVIEW: -----	REV: B

PHI PEPCO

POWER DISTRIBUTION STANDARDS

FRAMES FOR FLUSH TYPE MANHOLE FOR SIDEWALK AND ROADWAY

FABRICATION NOTES

1: WELD ALL CORNERS AT 90 DEGREES. GRIND OFF ANY HIGH SPOTS ON THE INSIDE FLANGE SURFACES TO ALLOW PROPER SEATING OF GRATINGS AND SLAB FRAMES. THE FINISHED FRAME IS TO HAVE ALL 4 CORNERS ON THE SAME PLANE AND IS NOT TO BE TWISTED OR BEND.

2: THE FRAME IS TO BE GALVANIZED AFTER SHOP WORK AND SHALL CONFORM TO A.S.T.M. SPECIFICATION A-123 WITH LATEST REVISIONS THEREOF.

3: FRAMES 14' LONG AND LARGER SHALL HAVE A 3"x3"x82.5" STEEL CHANNEL BRACE (STOCK NUMBER 9721-0135) BOLTED ACROSS THE CENTER OF THE FRAME TO PREVENT THE FRAME FROM BENDING DURING TRANSPORTATION. USE THE JACKING COILS AS THE BOLT HOLES FOR THE SUPPORT.

CONDUIT NOTES

4: MANHOLES WIDER THAN 6'-0" MUST BE COLLARED DOWN AT THE RIM TO PROVIDE A MAXIMUM SPAN OF 6'-0" IN ORDER TO UTILIZE THE 6'-10" REMOVABLE SLABS AND GRATINGS.

5: REFER TO ENGINEERING ASSEMBLY DRAWINGS (SECTION 8) FOR STANDARDS ARRANGEMENTS AND COVERS, FRAMES AND GRATINGS.

6: THE ENGINEER MAY SPECIFY A NON-STANDARD ARRANGEMENT OF THE SLABS AND GRATINGS BY SPECIFYING THEIR COMPATIBLE UNITS. IN THIS CASE THE ENGINEER MUST SHOW THE RECOMMENDED POSITIONING OF THE SLABS AND GRATINGS IN A SUB-SKETCH OF THE ROOF PLAN ON THE JOB DRAWING.

7: REV A: CHANGED DWG FORMAT AND CHANGED STOCK NO'S PER WMIS.

WELDING SPECIFICATIONS

1: ALL STRUCTURAL STEEL SHALL CONFORM TO ASTM A36.

2: ALL STEEL IS TO BE WELDED IN ACCORDANCE WITH AWS D1.1 USING EITHER THE SMAW PROCESS (AWS SPEC. A5.1) OR THE FCAW PROCESS (AWS SPEC. A5.20 OR A5.29).

3: ALL WELDING IS TO BE PERFORMED ACCORDING TO WELDING PROCEDURE SPECIFICATIONS PFAB200601, PFAB200602 AND PFAB200603.

4: ALL WELDERS ARE TO BE QUALIFIED ACCORDING TO AWS D1.1.

5: ALL WELDER CERTIFICATION RECORDS ARE TO BE DOCUMENTED, MAINTAINED AND AVAILABLE FOR INSPECTION/VERIFICATION.

DRAWN: LKD	DVLPED: PWL DATE: 11-03-80	REVIEWED: TDY DATE: 10/8/08	APPRVD: MDW DATE: 10/15/08	NEXT REVIEW: 11/11	REV: A

PHI PEPCO

POWER DISTRIBUTION STANDARDS

FRAME NOTES FOR FLUSH TYPE MH ROOFS

8" WALLS STOCK 6" x 6"

MANHOLE SIZE	"A" TYPE CROSS WALERS		"B" TYPE LONG WALERS		
	LENGTH	NO. PER MANHOLE	LENGTH	NO. PER MANHOLE	BOLTS PER MANHOLE
4' - 0" x 4' - 0"	4' - 4 1/2"	6	5' - 4"	6	12
4' - 0" x 15' - 0"	4' - 4 1/2"	9	16' - 4"	6	12
4' - 0" x 6' - 0"	4' - 10 1/2"	6	7' - 4"	6	12
4' - 0" x 17' - 0"	4' - 10 1/2"	9	18' - 4"	2	
	4' - 10 1/2" SP	3	9' - 0"	6	28
			9' - 4"	6	
5' - 6" x 8' - 6"	5' - 10 1/2"	9	9' - 4"	6	12
5' - 6" x 10' - 6"	5' - 10 1/2"	9	11' - 4"	6	12
5' - 6" x 12' - 6"	5' - 10 1/2"	9	13' - 4"	6	12
5' - 6" x 17' - 6"	5' - 10 1/2"	9	18' - 4"	2	
	5' - 10 1/2" SP	3	9' - 0"	6	28
			9' - 4"	6	
6' - 0" x 6' - 0"	6' - 4 1/2"	6	7' - 4"	6	12
6' - 0" x 8' - 0"	6' - 4 1/2"	9	9' - 4"	6	12
6' - 0" x 10' - 0"	6' - 4 1/2"	9	11' - 0"	6	12
6' - 0" x 12' - 0"	6' - 4 1/2"	9	13' - 4"	6	12
6' - 0" x 14' - 0"	6' - 4 1/2"	9	15' - 4"	6	12
6' - 0" x 16' - 0"	6' - 4 1/2"	9	17' - 4"	6	12
6' - 0" x 18' - 0"	6' - 4 1/2"	9	9' - 4"	6	
	6' - 4 1/2" SP	3	10' - 0"	6	
			19' - 4"	2	
6' - 0" x 20' - 0"			21' - 4"	2	28
	6' - 4 1/2"	6	13' - 4"	6	
	6' - 4 1/2" SP	3	8' - 0"	6	
6' - 0" x 22' - 0"			23' - 4"	2	
	6' - 4 1/2"	6	15' - 4"	6	12
	6' - 4 1/2" SP	3	8' - 4"	6	12
8' - 0" x 15' - 0"	8' - 4 1/2"	9	15' - 4"	6	12

NOTES:
1. ALL BOLTS TO BE 3/4" X 8" LONG
2. REV A: CHANGED DRAWING FORMAT.

REFERENCE:
1. PAGE 3 SECTION E METHOD OF SHORING FOR MANHOLE CONSTRUCTION .
THIS DRAWING SUPERSEDES DWG. NO. 2-2-0391 DATED 6-9-61.

DRAWN: DPJ	DVLPED: PWL DATE: 6/9/80	REVIEWED: TWM DATE: 10-15-08	APPRVD: MDW DATE: 10-29-08	NEXT REVIEW: 10-11	REV: A

PHI PEPCO

POWER DISTRIBUTION STANDARDS

SCHEDULE OF FABRICATED WALER FRAMING